NATIONAL AERONAUTICS AND SPACE ADMINISTRATION

NASA CR-
134449

(NASA-CR-134449) AIRLOADS INVESTIGATION OF AN 0.030 SCALE MODEL OF THE SPACE SHUTTLE VEHICLE 140A/B LAUNCH CONFIGURATION (MODEL 47-OTS) IN THE ARC 11-FOOT UNITARY PLAN WIND TUNNEL FOR MACH RANGE 0.6 TO 1.4 (IA14A). G3/18

N75-23661

Unclas
20536

MAY 1975
RECEIVED
NASA STI FACILITY
INPUT BRANCH

SPACE SHUTTLE

AEROTHERMODYNAMIC DATA REPORT

JOHNSON SPACE CENTER

HOUSTON, TEXAS

DATA MANagement services

SPACE DIVISION CHRYSLER CORPORATION

March, 1975

DMS-DR-2084
NASA CR-134,449

VOLUME 7 OF 11

AIRLOADS INVESTIGATION OF AN 0.030-SCALE MODEL OF THE SPACE SHUTTLE VEHICLE 140A/B LAUNCH CONFIGURATION (MODEL 47-OTS) IN THE ARC 11-FOOT UNITARY PLAN WIND TUNNEL FOR MACH RANGE 0.6 TO 1.4 (IA14A)

by

R. L. Gillins
Rockwell International Space Division

Prepared under NASA Contract Number NAS9-[illegible]247

by

Data Management Services
Chrysler Corporation Space Division

for

Engineering Analysis Division

Johnson Space Center
National Aeronautics and Space Administration
Houston, Texas

WIND TUNNEL SPECIFICS:

Test Number:	ARC 11-716
NASA Series No.:	1A14A
Model Number:	47-OTS
Test Dates:	4 through 13 September 1973

FACILITY COORDINATOR:

Stuart L. Treon
Mail Stop 227-5
Ames Research Center
Moffett Field, Calif. 94035

Phone: (415) 965-5850

PROJECT ENGINEERS:

R. L. Gillins,
V. Esparza, &
W. Embury
RI Space Div.
12214 Lakewood Blvd.
Mail Code AC07
Downey, Ca. 90241
Ph: (213) 922-4898

J. Brownson
Ames Research Center
Mail Stop 227-5
Moffett Field, Ca.
94035
Ph: (415) 965-6262

AERODYNAMIC ANALYSIS ENGINEERS:

I. M. Jaremenko
H. G. Webb
RI Space Division
12214 Lakewood Blvd.
Mail Stop AC07
Downey, Ca. 90241
Ph: (213) 922-2703

DATA MANAGEMENT SERVICES:

Prepared by: Liaison--D. A. Server
Operations--M. M. Mann, J. T. Daviet

Reviewed by: D. E. Poucher, J. L. Glynn

Approved: N. D. Kemp, Manager
Data Management Services

Concurrence: J. G. Swider, Manager
Flight Technology Branch

Chrysler Corporation Space Division assumes no responsibility for the data presented other than display characteristics.

AIRLOADS INVESTIGATION OF AN 0.030-SCALE MODEL

OF THE SPACE SHUTTLE VEHICLE

140A/B LAUNCH CONFIGURATION (MODEL 47-OTS)

IN THE ARC 11-FOOT UNITARY

PLAN WIND TUNNEL FOR MACH RANGE 0.6 TO 1.4 (IA14A)

VOLUME 7

By R. L. Gillins, Rockwell International Space Division

ABSTRACT

This report presents results of tests conducted on an 0.030-scale launch configuration model of the Space Shuttle Vehicle 140A/B in the NASA/ARC 11-Foot Unitary Plan Wind Tunnel. Aerodynamic loads data were obtained at Mach numbers from 0.6 to 1.4.

Surface pressure distributions were obtained simultaneously with six-component stability and control force data on the complete launch configuration. The configuration consisted of the orbiter, an external tank, two solid rocket boosters, and associated intercomponent attach hardware. Angles of attack and sideslip from -10 degrees to +10 degrees were investigated. The tests, designated IA14A, were conducted from 4 September 1973 through 13 September 1973.

TABLE OF CONTENTS

	Page
ABSTRACT	iii
INDEX OF MODEL FIGURES	3
INTRODUCTION	4
NOMENCLATURE	6
CONFIGURATIONS INVESTIGATED	11
INSTRUMENTATION DESCRIPTION	13
TEST FACILITY DESCRIPTION	14
DATA REDUCTION	15
REFERENCES	18
TABLES	
I. TEST CONDITIONS	21
II. DATA SET/RUN NUMBER COLLATION SUMMARY	23
III. MODEL DIMENSIONAL DATA	26
IV. ORBITER FUSELAGE PRESSURE ORIFICE LOCATIONS	40
V. ORBITER WING PRESSURE ORIFICE LOCATIONS	41
VI. ORBITER VERTICAL TAIL PRESSURE ORIFICE LOCATIONS	42
VII. ORBITER BASE, BODYFLAP, AND OMS NOZZLE PRESSURE ORIFICE LOCATIONS	43
VIII. EXTERNAL TANK PRESSURE ORIFICE LOCATIONS	44
IX. SRM PRESSURE ORIFICE LOCATIONS	45
X. ORBITER ATTACH POINT PRESSURE ORIFICE LOCATIONS	46
XI. EXTERNAL TANK ATTACH POINT PRESSURE ORIFICE LOCATIONS	47

PRECEDING PAGE BLANK NOT FILMED

TABLE OF CONTENTS (Concluded)

	Page
FIGURES	
MODEL	50
TABULATED PRESSURE DATA	69

INDEX OF MODEL FIGURES

Figure		Title	Page
1.		Axis systems.	
	a.	Stability and body axis systems	50
	b.	Orifice location nomenclature diagram	51
2.		Model sketches.	
	a.	Integrated Vehicle - 2 Balances, no attach structure	52
	b.	Integrated Vehicle - 1 Balance, with attach structure	53
	c.	Integrated Vehicle - 2 Balances, with attach structure	54
	d.	Installation side views	55
	e.	Attach hardware	56
	f.	External tank protuberances	57
	g.	SSV orbiter configuration 140A/B	58
	h.	Orbiter nomenclature	59
	i.	Canopy, C_9, and body, B_{26}, lines drawing VL70-00193 and VL70-000140A/B	60
	j.	M_7 - OMS pod	61
	k.	Body flap, F_8, lines drawing no. VL70-000140A/B	62
	l.	Wing, W_{116}, lines drawing no. VL70-000200	63
	m.	Elevon, E_{26}, lines drawing no. VL70-000200, VL70-000140A/B	64
	n.	Vertical tail, V_8, and rudder, R_5, lines drawing no. VL70-000146A	65
	o.	Rudder, R_5, lines drawing no. VL70-000095	66
3.		Model photographs.	
	a.	Front view of model installed in tunnel	67
	b.	Rear view of model installed in tunnel	68

INTRODUCTION

The 0.030-scale aero loads Space Shuttle Model was tested in the ARC Unitary Plan Wind Tunnels as follows:

IA14A	4 thru 13 Sept. 1973
IA14B	17 thru 19 Sept. 1973
OA22A	13 thru 14 Sept. 1973
OA22B	19 thru 20 Sept. 1973

For tests IA14B, OA22A, and OA22B, see reference 34, 35, and 36, respectively.

The testing was conducted in the 11-foot and the 9- by 7-foot tunnels of the ARC Unitary Plan Wind Tunnels. The IAI4A/B tests were for the launch configurations at Mach numbers from 0.6 to 2.2. The OA22A/B tests were for the orbiter alone configuration at Mach numbers from 0.6 to 2.2. The effects of control surface deflections were also investigated in tests OA22A/B.

This report for test IA14A consists of one volume of force data and ten volumes of pressure data for a total of eleven volumes arrayed in the following manner:

Volume No.	Contents	Page
1.	IA14A force data	
2.	IA14A plotted pressure data	
3.	IA14A tabulated pressure data	
	(a) Orbiter fuselage (B)	1-725
	(b) Orbiter base (C)	726-918

Volume No.	Contents	Page
4.	IA14A tabulated pressure data	
	(a) OMS nozzle (E)	919-1145
	(b) Body flap (F)	1146-1338
	(c) OMS pod outside (M)	1339-1531
5.	IA14A tabulated pressure data	
	(a) Lower wing surface (L)	1532-2414
6.	IA14A tabulated pressure data	
	(a) Upper wing surface (U)	2415-3297
7.	IA14A tabulated pressure data	
	(a) Left vertical tail surface (V)	3298-3603
	(b) Right vertical tail surface (R)	3604-3909
8.	IA14A tabulated pressure data	
	(a) SRM booster (S)	3910-4444
9.	IA14A tabulated pressure data	
	(a) External tank (T)	4445-5031
	(b) SRM nozzle (X)	5032-5161
10.	IA14A tabulated pressure data	
	(a) External tank base & SRM booster base (Y)	5162-5354
	(b) Orbiter attach points (1)	5355-5941
11.	IA14A tabulated pressure data	
	(a) External tank attach points (2)	5942-6313
	(b) External tank base rake (3)	6314-6412

NOMENCLATURE
General

SYMBOL	SADSAC SYMBOL	DEFINITION
a		speed of sound; m/sec, ft/sec
C_p	CP	pressure coefficient; $(p_l - p_\infty)/q$
M	MACH	Mach number; V/a
p		pressure; N/m^2, psf
q	Q(NSM) Q(PSF)	dynamic pressure; $1/2\rho V^2$, N/m^2, psf
RN/L	RN/L	unit Reynolds number; per m, per ft
V		velocity; m/sec, ft/sec
α	ALPHA	angle of attack, degrees
β	BETA	angle of sideslip, degrees
ψ	PSI	angle of yaw, degrees
ϕ	PHI	angle of roll, degrees
ρ		mass density; kg/m^3, $slugs/ft^3$
		Reference & C.G. Definitions
A_b		base area; m^2, ft^2
b	BREF	reference span; m, ft
c.g.		center of gravity
$\bar{c}$		reference length or wing mean aerodynamic chord; m, ft
S	SREF	wing area or reference area, m^2, ft^2
	MRP	moment reference point
	XMRP	moment reference point on X axis
	YMRP	moment reference point on Y axis
	ZMRP	moment reference point on Z axis

SUBSCRIPTS

b	base
l	local
s	static conditions
t	total conditions
∞	free stream

NOMENCLATURE (Continued)

Body-Axis System

SYMBOL	SADSAC SYMBOL	DEFINITION
C_N	CN	normal-force coefficient; $\frac{\text{normal force}}{qS}$
C_A	CA	axial-force coefficient; $\frac{\text{axial force}}{qS}$
C_Y	CY	side-force coefficient; $\frac{\text{side force}}{qS}$
C_{A_b}	CAB	base-force coefficient; $\frac{\text{base force}}{qS}$ $-A_b(p_b - p_\infty)/qS$
C_{A_f}	CAF	forebody axial force coefficient, $C_A - C_{A_b}$
C_m	CIM	pitching-moment coefficient; $\frac{\text{pitching moment}}{qS\ell_{REF}}$
C_n	CYN	yawing-moment coefficient; $\frac{\text{yawing moment}}{qSb}$
C_ℓ	CBL	rolling-moment coefficient; $\frac{\text{rolling moment}}{qSb}$
		Stability-Axis System
C_L	CL	lift coefficient; $\frac{\text{lift}}{qS}$
C_D	CD	drag coefficient; $\frac{\text{drag}}{qS}$
C_{D_b}	CDB	base-drag coefficient; $\frac{\text{base drag}}{qS}$
C_{D_f}	CDF	forebody drag coefficient; $C_D - C_{D_b}$
C_Y	CY	side-force coefficient; $\frac{\text{side force}}{qS}$
C_m	CLM	pitching-moment coefficient; $\frac{\text{pitching moment}}{qS\ell_{REF}}$
C_n	CLN	yawing-moment coefficient; $\frac{\text{yawing moment}}{qSb}$
C_ℓ	CLL	rolling-moment coefficient; $\frac{\text{rolling moment}}{qSb}$
L/D	L/D	lift-to-drag ratio; C_L/C_D

NOMENCLATURE (Continued)
Additions To Standard List

Symbol	SADSAC Symbol	Definition
$A_{(\ )}$		model base area, subscript is base orifice number and identifies location
C_{A_b}	CAB	model base axial-force coefficient
$C_{p_{(\ )}}$		model static pressure coefficient, subscript is orifice number, $[p_{(\ )} - p_\infty]/q$
C_{AU}	CA	axial-force coefficient, unadjusted
C_{AF}	CAF	forebody axial-force coefficient, C_{AU} adjusted for base terms
ET		external tank
IV		integrated vehicle, consists of orbiter, external tank, and two solid rocket motors
l_{REF}	LREF	reference length, inches
MRC		moment reference center
OMS		orbital maneuvering system
δ_e	ELEVON	elevon, surface deflection angle, positive deflection trailing edge down, degrees
δ_f	BDFLAP	orbiter body flap deflection angle, positive deflection angle is trailing edge down, degrees
δ_R	RUDDER	rudder, surface deflection angle, positive deflection trailing edge to the left, degrees
δ_{SB}	SPDBRK	speed brake deflection angle, left split rudder trailing edge left and right split rudder trailing edge right, $\delta_{SB} = (\delta_{RL} + \delta_{RR})/2$, positive deflection, degrees
i_o	ORBINC	incidence angle between the orbiter and external tank, $i_0 = \alpha_0 - \alpha_T$, degrees

NOMENCLATURE (Continued)

β_T	BETAT	angle of sideslip of external tank, degrees
α_T	ALPHAT	angle of attack of external tank, degrees
ℓ_B	LB	length of orbiter body, in
ℓ_T	LT	length of external tank, in
ℓ_S	LS	length of SRM booster, in
ℓ_{NM}	LNM	length of OMS nozzle, positive direction forward of exit plane, in
ℓ_{NP}	LNP	length of MPS nozzle, positive direction forward of exit plane, in
b/2	BW	wing semi-span, in
b_v	BV	vertical tail span, in
x	X	distance from component nose, in
y	Y	lateral distance from centerline, in
z	Z	vertical distance measured from W.L. 500 (vertical tail reference root chord), in
c_w	CW	local wing chord, in
c_v	CV	local vertical tail chord, in
x/ℓ_B	X/LB	longitudinal position/orbiter body length
x/ℓ_T	X/LT	longitudinal position/external tank length
x/ℓ_S	X/LS	longitudinal position/booster length
x/ℓ_{NM}	X/LNM	longitudinal position/OMS nozzle length

NOMENCLATURE (Concluded)

x/ℓ_{NP}	X/LNP	longitudinal position/MPS nozzle length
x/c_w	X/CW	local chordwise position/local wing chord length
x/c_v	X/CV	local chordwise position/local vertical tail chord length.
η	Y/BW	local spanwise position/wing semi-span
η_v	Z/BV	local spanwise position/vertical tail span
x_{CP}/ℓ	XCP/L	center of pressure distance from MRC, expressed as a fraction of body length
β_0	BETAO	angle of sideslip of orbiter
α_0	ALPHAO	angle of attack of orbiter

CONFIGURATIONS INVESTIGATED

The 0.030-scale Aero Loads Model, 47-OTS, was configured after the Shuttle Vehicle MCR 0200 Baseline R1, as defined in drawing number VL70-000088B. The orbiter configuration was a combination of the VL70-000140A orbiter and a VL70-000140B wing and midbody, from which the 140A/B designation was derived. The basic launch configuration consisted of the orbiter, an external tank with simulated fuel and vent lines, and two solid rocket boosters, designated O_1 T_{12} S_{12} N_{25}.

Three launch configurations were tested. One was the basic configuration described above mounted on a dual balance and sting arrangement, illustrated in figure 2d. A second contained attach hardware, designated AT_{10}, mating the orbiter with the external tank and mounted on a single sting and balance in the orbiter, illustrated in figure 2b. The third utilized a similar attach hardware configuration, designated AT_{11}, which was attached to the orbiter but not to the external tank and was mounted on the same dual sting and balance arrangement as the basic configuration (figure 2c). In all three configurations, the SRB-to-ET attach hardware was simulated at the forward attach location but not at the aft attach location. Model and component general arrangements are shown in figures 2e through 2o.

Component	Description
O_1	140A/B orbiter minus the main propulsion system nozzles
T_{12}	324-inch diameter external tank with ogive nose and external fuel and vent lines
S_{12}	142.3-inch diameter solid rocket boosters

N_{25}	Nozzles for S_{12} boosters
AT_{10}	Orbiter-to-ET attach hardware, fixed to both vehicles
AT_{11}	Orbiter-to-ET attach hardware, fixed to orbiter only
LV	O_1 T_{12} S_{12} N_{25}
LVA	O_1 T_{12} S_{12} N_{25} AT_{10}
LVAP	O_1 T_{12} S_{12} N_{25} AT_{11}

The orbiter O_1, consisted of the following components:

B_{26} C_9 F_8 M_7 N_{28} V_8 R_5 W_{116} E_{26}.

B_{26}	Double delta wing fuselage, 140A/B
C_9	Canopy, 140A
F_8	Body flap, 140A
M_7	OMS pods, 140A
N_{28}	OMS nozzles, 140A
V_8	Vertical tail, 140A
R_5	Rudder, 140A
W_{116}	Double delta wing, 140B
E_{26}	Elevons, 140B

Parametric investigations were limited to angles of attack and sideslip with all orbiter control surfaces at 0° deflection.

INSTRUMENTATION DESCRIPTION

The left side of the orbiter and the external tank and the left hand SRB were extensively instrumented with pressure orifices for measurement of surface static pressure distributions. Additionally, there were clusters of orifices around inter-component attach structure locations on the right hand side of the orbiter and external tank. The orbiter contained 471 operational orifices, of which 83 were clustered around attach structure. The external tank contained 270 operational orifices, of which 127 were clustered around attach structure. The SRB contained 124 operational orifices. A three-tube total pressure rake was installed in the opening between the orbiter and external tank. Tables and sketches defining orifice locations are included in this report. All model pressures were measured by model mounted Scanivalve, Inc., S-type scanivalve modules - twelve in the orbiter, seven in the external tank, and five in the SRB.

Force instrumentation consisted of a six-component internal force balance in both the orbiter and external tank for the LV and LVAP configurations, and a single six-component internal force balance in the orbiter for the attached LVA configuration.

TEST FACILITY DESCRIPTION

The tests were conducted in the Ames 11- by 11-Foot Transonic Wind Tunnel which is a variable density, closed return, continuous flow type. This tunnel has an adjustable nozzle (two flexible walls) and a slotted test section to permit transonic testing over a Mach number range continuously variable from 0.4 to 1.4.

DATA REDUCTION

Data were reduced to coefficient form about body axes using the following reference constants:

S_{REF} = 2.421 ft^2	reference area for force and moment coefficients
ℓ_{REF} = 38.709 in	reference length for moment coefficients
A_1 = 0.07670 ft^2	Orbiter sting cavity
A_2 = 0.21340 ft^2	Orbiter heat shield base
A_3 = 0.08560 ft^2	Orbiter OMS base (2)
A_4 = (see table below)	Orbiter speed brake base
A_{501} = 0.07266 ft^2	Tank sting cavity
A_{502} = 0.44264 ft^2	Tank base
A_{801} = 0.19600 ft^2	SRM nozzle base (2)
A_{802} = 0.16590 ft^2	SRM skirt base (2)

δ_{SB} =	deg	A_4 =	ft^2
0		0	
14.92		0.02327	
24.92		0.03866	
34.92		0.05370	
54.92		0.08252	
84.92		0.12083	

X_{MRP} = 0 in

Y_{MRP} = 0 in

Z_{MRP} = 9.99 in

The incidence angle between the orbiter and the external tank is equal to zero for angle of attack and angle of sideslip. Therefore, the angle of attack, ALPHA, used in the force plots is equal to ALPHAO. Also the angle of sideslip, BETA, used in the force plots is equal to BETAO.

The force and moment data recorded by the orbiter balance for configuration LV and LVAP are identified as RB10XX datasets. Force and moment data recorded by the tank balance for configuration LV and LVAP and by the orbiter balance for LVA (composite) are identified by RB1IXX.

The pressure data were recorded for each component. The fourth character in each dataset identifier (i.e. RB1BXX, B for fuselage) represents the individual component. The following list indicates the symbol for each component.

SYMBOL	COMPONENT
B	Orbiter fuselage
C	Orbiter base
E	OMS nozzle
F	Body flap
M	OMS pod outside
L	Lower wing surface
U	Upper wing surface
R	Right vertical tail surface
V	Left vertical tail surface
S	SRM booster
T	External tank
X	SRM nozzle

SYMBOL	COMPONENT
Y	External tank base & SRM booster base
1	Orbiter attach points
2	External tank attach points
3	External tank base rake

REFERENCES

1. Orbiter - Lines and Configuration Control Drawings

2. VL70-000140A, Orbiter Configuration Control Drawing MCR 0200 Baseline

3. VL70-000143A, Lines Control, Vehicle 4 Forward Body - Cabin - Canopy MCR 0200 Baseline

4. VL70-000200, Lines Control, Midbody - Wing - Boot Fairing MCR 200 R3 dated 7-2-73

5. VL70-000145, Lines Control - Aft Body - OMS/RCS Pods, MCR 0200 - R1 baseline

6. VL70-000146A, Lines Control (Vehicle 4) Vertical Tail MCR 0200 Baseline

7. External Oxygen Hydrogen Tank (EOHT) - Lines and Configuration Control Drawings

8. VL78-000041B, External Tank - Configuration Control MCR 0200 Baseline R2

9. VL78-000024A, Structural Assy - External Tank MCR 0200 R2

10. VL78-000031A, Thermal Protection - External Tank, MCR 0200 Baseline

11. Solid Rocket Boosters (SRB) - Lines and Configuration Control Drawings

12. VL77-000036A, SRB Configuration Control MCR 0200 R1

13. VL77-000041, SRB Booster Assy, MCR 0200 R1

14. Integrated Vehicle - Lines and Configuration Control Drawings

15. VL72-000088A, Shuttle Configuration MCR 0200 Baseline R1

16. VL72-000089, SRB-ET-Orbiter Interface Disconnects MCR 0200 Baseline

17. VL72-000075, External Tank to SRB Attach Interface MCR 0074 Baseline

18. Aero Loads Model 47-OTS - Model Fabrication, Assembly and Installation Drawings

19. SS-A00119, Orbiter Assy - .030 Scale Pressure/Loads Model (140A/B Lines)

20. SS-A00120, Assy & Details - EOHT - .030 Scale Pressure/Loads Model (140A Lines)

21. SS-A00121, Orbiter/EOHT Attachments .030 Scale Pressure/Loads Model (140A Lines)

22. SS-A00122, Assy & Details - SRM - .030 Scale Pressure/Loads Model (140A Lines)

23. SS-A00123, Assy & Details - Forebody - .030 Scale Pressure/ Loads Model (140A Lines)

24. SS-A00124, Assy & Details - Aft Fuselage - .030 Scale Pressure/ Loads Model (140A Lines)

25. SS-A00125, Assy & Details - Wing Splice Plate & Cuff - .030 Scale Pressure/Loads Model (140A Lines)

26. SS-A00126, Assy & Details - Vertical Stabilizer - .030 Scale Pressure/Loads Model (140A Lines)

27. SS-A00127, Ames 11-ft x 11-ft Wind Tunnel Installation - .030 Scale Pressure/Loads Model (140A/B Lines)

28. SS-A00128, Ames 9-ft x 7-ft Wind Tunnel Installation - .030 Scale Pressure/Loads Model (140A/B Lines)

29. SS-A00130, Lines Control - Profile VL70-000140A - .030 Scale Pressure/Loads Model (140A/B Lines)

30. W-1104S Sting - Ames MK II 4" Balance (Male End), Ames MK XX 2.5" Balance

31. W-1105S, Sting - Ames MK II 4" Balance (Male End), RI MK I 2.75 Balance

32. W-1106A, Adapter - Ames MK II, 4" Balance (Male & Female)

33. W-1107A, 13.5" Bent Sting Adapter Ames MK II 4" Balance (Male & Female)

34. (DMS-DR-2129), "Airloads Investigation of an 0.030-Scale Model of the Space Shuttle Vehicle 140A/B Launch Configuration (Model 47-OTS) in the ARC 9- by 7-foot Unitary Plan Wind Tunnel for Mach Range 1.55 and 2.2 (IA14B)"

35. (DMS-DR-2130), "Airloads Investigation of an 0.030-Scale Model of the Space Shuttle Vehicle 140A/B Orbiter Configuration (Model 47-0) in the ARC 11-foot Unitary Plan Wind Tunnel for Mach Range 0.6 and 0.9 (OA22A)"

36. (DMS-DR-2131), "Airloads Investigation of an 0.030-Scale Model of the Space Shuttle Vehicle 140A/B Orbiter Configuration (Model 47-0) in the ARC 9- by 7-foot Unitary Plan Wind Tunnel for Mach Range 1.55 and 2.2 (OA22B)"

TABLE I.

TEST : IA-14A

DATE : 9-13-73

TEST CONDITIONS

MACH NUMBER	REYNOLDS NUMBER (per unit length)	DYNAMIC PRESSURE (pounds/sq. ft.)	STAGNATION TEMPERATURE (degrees Fahrenheit)
0.60	4.0×10^6	480	120
0.75	3.75×10^6	540	120
0.85	3.5×10^6	550	120
0.90	3.5×10^6	580	120
0.95	3.25×10^6	610	120
0.975	3.0×10^6	530	120
1.00	3.0×10^6	535	120
1.025	3.0×10^6	540	120
1.05	3.0×10^6	545	120
1.10	[illegible] 10^6	550	120
1.15	[illegible] $\times 10^6$	575	120
1.25	2.75×10^6	540	120
1.40	2.75×10^6	570	120

BALANCE UTILIZED: LVA: 2.5-in MK XX (ORBITER)
LVAP: 2.5-in MK XX (ORB.), 2.75-in MK I (ET)

	CAPACITY: MK XX	CAPACITY: MK I	ACCURACY: MK XX	ACCURACY: MK I	COEFFICIENT TOLERANCE:
NF	6000	7500			
SF	3000	3750	0.2%	0.2%	
AF	600	700	0.2%	0.2%	
PM					
RM	4000	4000	0.2%	0.2%	
YM					

COMMENTS: Test conditions for LVA and LVAP model configurations

TABLE I. - Concluded.

TEST : IA-14A

DATE : 9-13-73

TEST CONDITIONS

MACH NUMBER	REYNOLDS NUMBER (per unit length)	DYNAMIC PRESSURE (pounds/sq. ft)	STAGNATION TEMPERATURE (degrees Fahrenheit)
0.60	4.0×10^6	480	120
0.75	4.25×10^6	610	120
0.85	4.5×10^6	710	120
0.90	4.5×10^6	750	120
0.95	4.5×10^6	780	120
0.975	4.25×10^6	750	120
1.05	4.25×10^6	790	120
1.10	4.0×10^6	760	120
1.15	3.75×10^6	720	120
1.25	2.75×10^6	735	120
1.40	3.0×10^6	620	120

BALANCE UTILIZED: 2.5-in MK XX (ORB.), 2.75-in MK I (ET)

	CAPACITY MK XX	CAPACITY MK I	ACCURACY MK XX	ACCURACY MK I	COEFFICIENT TOLERANCE
NF	6000	7500	0.2%	0.2%	
SF	3000	3750	0.2%	0.2	
AF	600	700	0.2%	0.2%	
PM					
RM	4000	4000	0.2%	0.2	
YM					

COMMENTS Test conditions for LV model config.

TABLE II

TEST: TA-4A

DATA SET RUN NUMBER COLLATION SUMMARY

DATE 13 Sept 1973

DATA SET IDENTIFIER	CONFIGURATION	SCHD. α	SCHD. β	CONTROL DEFLECTION			NO. OF RUNS	MACH NUMBERS OR ALTERNATE INDEPENDENT VARIABLE										TEST RUN NUMBERS
								0.9	0.975	1.1	1.25							
RB 17	Ø1+T12+S12+N25+A11	3	0	0	0			40	93	92	89							
18	" +AT11	0	3						91	91	90							
24	Ø1+T12+S12+N25+AT10	-10	3					5*										
25		-8						3*										
26		-6						10*										
27		-4						1*										
28		0									38							
29		-10	0								39*							
30	Ø1-T12+S12+N25+A111	0	0									D						

CN	CLM	CA	CAF	CY	CYN	CBL

α SCHEDULE: α(B) = β(B) = -8, -4, 0, 4, 8

β(Z) = -10, 10

IDVAR(1): β(Y) = -10, -8, -6, -4, -2, 0

IDVAR(2): M.C.(D) = 0.975, 1.0, 1.1, 1.25

NDV:

* FORCE DATA NOT AVAILABLE.

NASA-MSFC-MAF

TABLE II - Continued

TEST: I A14A

DATA SET RUN NUMBER COLLATION SUMMARY

DATE [illegible]

DATA SET IDENTIFIER	CONFIGURATION	SCHD. B	PARAMETERS/VALUES M	δ_e	δ_R	δ_{SB}	NO. OF RUNS	-10	-8	-6	-4	-2	0	2	4	6	8	10
KB1x31	$\phi_1+T_{12}+S_{12}N_{25}+AT_{10}$	A	.9	0	0	0		1*	2*	3*	4*	5	6	7	12	13	14	15
32			1.1					16*	17*	18*	19*	20	21	22	23	24	25	26
33			1.25					27*	28*	29*	30*	31	32	33	34	35	36	37
34	$+AT_{11}$	B	.60						47		48		49		50		51	
35			.75						56		55		54		53		52	
36			.85						42		43		44		45		46	
37			.95						57		58		59		60		61	
38			1.05						63		64		65		66		67	
39			1.15						68		69		70		71		72	
[illegible]			1.4						94		95		96		97		98	
[illegible]			.60						149		148		147		146		145	
42			.75						140		141		142		143		144	
43			.85						135		136		137		138		139	
44			.95						130		131		132		133		134	
45			[illegible]						125		126		127		128		129	
46			1.05						120		121		122		123		124	
47			1.15						115		116		117		118		119	
48			1.10						110		111		112		113		114	

NO. OF ALTERNATE MEASUREMENT VARIABLES

TEST RUN NUMBERS

1 7 13 19 25 31 37 43 49 55 61 67 75 76

COEFFICENTS

IDVAR (1) IDVAR (2) NDV

a OR B SCHEDULES

A = -10 to +10

B = -8, -4, 4, 8

* FORCE DATA NOT AVAILABLE.

TABLE II - Concluded

TEST: TA14A

DATA SET RUN NUMBER COLLATION SUMMARY

DATE: 13 Sept. 1973

DATA SET IDENTIFIER	CONFIGURATION	SCHD.		PARAMETERS/VALUES				NO. OF RUNS	ALPHA (OR ALTERNATE INDEPENDENT VARIABLE)										TEST RUN NUMBERS
			β	M	[illegible]	[illegible]	[illegible]		-8	-4	0	4	8						
RB1x49	$P_1+T_2+J_{12}N_{25}$		B	115	0	0	0		105	106	107	108	109						
50				125					95	96	97	98	99						
51				140					100	101	102	103	104						

1 7 13 19 25 31 37 43 49 55 61 67 75 76

COEFFICENTS IDVAR (1) IDVAR (2) NDV

α OR β SCHEDULES $\beta(B) = -8, -4, 0, 4$

TABLE III. - MODEL DIMENSIONAL DATA

MODEL COMPONENT: ATTACH STRUCTURE - AT_{10}

GENERAL DESCRIPTION: Attach structure for Integrated Vehicle Configuration 4 per VL72-000088B and VL72-000089, modified as follows: Removed ET-to-SRM aft attach struts (4) and left orbiter to right ET aft attach crossover rod.

MODEL SCALE: 0.030

DRAWING NO.: SEE DESCRIPTION

DIMENSIONS:	FULL SCALE	MODEL SCALE
FORWARD ATTACH		
Orbiter to Tank		
Number of struts	2	2
Diameter - In.	6.000	0.180
Location - In.		
X_O	382.000	11.460
X_T	1078.000	32.340
DRAG LINK ATTACH		
Orbiter to Tank		
Number of struts	2	2
Diameter, In.	15.000	0.450
Location, In.		
X_O	1307.000	39.210
X_T	1859.000	55.770
AFT ATTACH		
Orbiter to Tank		
Number of struts	2	2
Diameter - In.	12.000	0.360
Location - In.		
X_O	1307.000	39.210
X_T	2058.000	61.740
CROSSOVER ROD (RIGHT ORBITER TO LEFT ET)		
Diameter, In.	8.000	0.240
Location - In.		
X_O	1307.000	39.210
X_T	2058.000	61.740

TABLE III. - Continued.

MODEL COMPONENT: ATTACH STRUCTURE - AT_{11}

GENERAL DESCRIPTION: Attach structure, same as AT_{10} except the forward attach struts are rotated to the vertical, and the structure extends from the orbiter but is not attached to the tank.

MODEL SCALE: 0.030

DIMENSIONS:	FULL SCALE	MODEL SCALE
FORWARD ATTACH		
Orbiter to Tank		
Location - In.		
X_O	382.000	11.460
X_T	1133.000	33.990
Clearance, tank to strut - In.	16.667	0.500
DRAG LINK ATTACH		
Orbiter to Tank		
Clearance, tank to strut - In.	8.333	0.250
AFT ATTACH		
Orbiter to Tank		
Clearance, Tank to strut - In.	8.333	0.250
Crossover Rod		
Clearance, tank to strut - In.	8.333	0.250

TABLE III. - Continued.

MODEL COMPONENT: BODY - B_{26}

GENERAL DESCRIPTION: Orbiter Fuselage Configuration 140 A/B

NOTE: B_{26} identical to B_{24} except underside of fuselage refaired to accept W_{116}.

Model Scale = .030

DRAWING NUMBER: VL70-000193
VL70-000140A

DIMENSIONS:	FULL-SCALE	MODEL SCALE
Length (Body Fwd Sta X_o = 238) - in.	1293.3	38.799
Max. Width (at X_o = 1520) - in.	262.0	7.860
Max. Depth (at X_o = 1464) - in.	250.0	7.500
Fineness Ratio	0.26357	0.26357
Area - ft^2		
Max. Cross-Sectional	340.88462	0.30679
Planform		
Wetted		
Base		

TABLE III. - Continued.

MODEL COMPONENT: CANOPY - C9

GENERAL DESCRIPTION: Configuration 3A

Model Scale = .030

DRAWING NUMBER VL70-000140A
VL70-000143A

DIMENSION:	FULL SCALE	MODEL SCALE
Length (X_o=434.643 to 670)	235.357	7.06071
Max Width (@ X_o=513.227)	152.412	4.57236
Max Depth (@ X_o=485.0)	25.000	0.75000
Fineness Ratio		
Area		
Max Cross-Sectional		
Planform		
Wetted		
Base		

TABLE III. - Continued.

MODEL COMPONENT: ELEVON - E_{26}

GENERAL DESCRIPTION: Configuration 4

NOTE: VL70-000400 data for (1) of (2) sides. Identical to E_{25} except airfoil thickness

Model Scale = .030

DRAWING NUMBER: VL70-000200
VL70-000140 B

DIMENSIONS:	FULL-SCALE	MODEL SCALE
Area	223.5814	0.20122
Span (equivalent)	368.34	11.05020
Inb'd equivalent chord	119.623	3.58869
Outb'd equivalent chord	55.1922	1.65577
Ratio movable surface chord/ total surface chord		
At Inb'd equiv. chord	0.2096	0.2096
At Outb'd equiv. chord	0.4004	0.4004
Sweep Back Angles, degrees		
Leading Edge	0.00	0.00
Tailing Edge	-10.056	-10.056
Hingeline	0.00	0.00
Area Moment (Normal to hinge line)	851.1502	0.76604

TABLE III. - Continued.

MODEL COMPONENT: Body Flap - F_8

GENERAL DESCRIPTION: Configuration 4

Model Scale - .030

DRAWING NUMBER VL70-000140B, VL70-000200

DIMENSION:	FULL SCALE	MODEL SCALE
Length in.	84.7	2.541
Max Width in.	262.308	7.86924
Max Depth in.	23.000	~~0.69000~~
Fineness Ratio		
Area - ft^2		
Max Cross-Sectional		
Planform	158.85350	0.14297
Wetted		
Base	41.89642	0.03771

ORIGINAL PAGE IS OF POOR QUALITY

TABLE III. - Continued.

MODEL COMPONENT: OMS POD - M_7

GENERAL DESCRIPTION: Configuration 3A

Model Scale = .030

DRAWING NUMBER VL70-000140A
VL70-000145

DIMENSION:	FULL SCALE	MODEL SCALE
Length (OMS Fwd Sta X_o=1233.0) - IN.	327.000	9.810
Max Width (@ X_o=1450.0) - IN.	94.5	2.8350
Max Depth (@ X_o=1493.0) - IN.	109.000	3.270
Fineness Ratio		
Area		
Max Cross-Sectional		
Planform		
Wetted		
Base		

TABLE III. - Continued.

MODEL COMPONENT: BSRM NOZZLES - N_{25}

GENERAL DESCRIPTION: Configuration 3A BSRM Nozzles

Model Scale = .030

DRAWING NO. VL72-000088A
VL77-000036A

DIMENSIONS	FULL-SCALE	MODEL SCALE
MACH NO. _____		
DIAMETER DEX ~ IN (One Nozzle)	141.3	4.2390
DIAMETER DT ~ IN		
DIAMETER DIN ~ IN		
ON ~ DEGREES		
AREA - FT^2 (One Nozzle)		
MAX CROSS-SECTIONAL	108.89595	0.09801

GIMBAL ORIGIN	X_o	Y_o	Z_o
LEFT NOZZLE ~ IN. F.S.	1825.3	-243	400
RIGHT NOZZLE ~ IN. FS	1825.3	+243	400

NULL POSITION - DEG.	PITCH	YAW
LEFT NOZZLE	±8	±8
RIGHT NOZZLE	±8	±8

ORIGINAL PAGE IS
OF POOR QUALITY

TABLE III. - Continued.

MODEL COMPONENT: NOZZLES - N_{28}

GENERAL DESCRIPTION: Configuration 3A OMS Nozzle

Model Scale = .030

DRAWING NO. VL70-000140X

DIMENSIONS	FULL-SCALE	MODEL SCALE
MACH NO. _____		
DIAMETER DEX ~ IN (One nozzle)		
DIAMETER DT ~ IN		
DIAMETER DIN ~ IN		
ON ~ DEGREES		
AREA - Ft^2 (one nozzle)		
MAX CROSS-SECTIONAL		

GIMBAL ORIGIN	X_o	Y_o	Z_o
LEFT NOZZLE ~ IN.	1518.0	-88.0	492.0
RIGHT NOZZLE ~ IN.	1518.0	+88.0	492.0

NULL POSITION	PITCH	YAW
LEFT NOZZLE (Null Pitch 15°49'; Yaw 12°17' OUTB'D)	±6°	13°17' OUTB'D 2°30' INB'D
RIGHT NOZZLE (Null Pitch 15°49'; Yaw 12°17' OUTB'D)	±8°	13°17' OUTB'D 2°17' INB'D

TABLE III. - Continued.

MODEL COMPONENT: RUDDER - R5

GENERAL DESCRIPTION: 2A, 3 and 3A Configuration per Rockwell Lines VL70-000095

Model Scale = .030

DRAWING NUMBER: VL70-000095

DIMENSIONS:	FULL-SCALE	MODEL SCALE
Area - FT^2	106.38	0.09574
Span (equivalent) - IN.	201.0	6.0300
Inb'd equivalent chord	91.585	2.74755
Outb'd equivalent chord	50.833	1.52499
Ratio movable surface chord/ total surface chord		
At Inb'd equiv. chord	0.400	0.400
At Outb'd equiv. chord	0.400	0.400
Sweep Back Angles, degrees		
Leading Edge	34.83	34.83
Tailing Edge	26.25	26.25
Hingeline	34.83	34.83
Area Moment (Normal to hinge line)- FT^3 Product of Area and Mean Chord	526.13	0.01420

TABLE III. - Continued.

MODEL COMPONENT: BOOSTER SOLID ROCKET MOTOR - S_{12}

GENERAL DESCRIPTION: Configuration 3A, Data for (1) of (2) sides, per Rockwell Lines VL77-000036A

Model Scale = .030

DRAWING NUMBER VL72-000088A VL77-000036A

DIMENSION:	FULL SCALE	MODEL SCALE
Length (Includes Nozzle) - IN.	1741.0	52.2300
Max Width (Tank Dia) - IN.	142.3	4.2690
Max Depth (Aft Shroud) - IN.	192.0	5.7600
Fineness Ratio	9.06771	9.06771
Area - FT^2		
Max Cross-Sectional	201.06193	0.18096
Planform		
Wetted		
Base		
WP of BSRM Centerline (Z_T) - IN.	400	12.000
FS of BSRM Nose (X_T) - IN.	200	6.000

TABLE III. - Continued.

MODEL COMPONENT: EXTERNAL TANK - T12

GENERAL DESCRIPTION: External Oxygen Hydrogen Tank

NOTE: Identical to T11 with external fuel lines added

Model Scale = .030

DRAWING NUMBER VL78-000031A
VL78-000041A

DIMENSION:	FULL SCALE	MODEL SCALE
Length - IN. (Nose @ X_T = 309)	1865	57.629
Max Width (Dia) - IN.	324	9.72
Max Depth		
Fineness Ratio	5.75617	5.75617
Area - FT^2		
Max Cross-Sectional	572.555	17.177
Planform		
Wetted		
Base		
WP of Tank Centerline (X_T) - IN.	400.0	

TABLE III. - Continued.

MODEL COMPONENT: VERTICAL - V_8

GENERAL DESCRIPTION: Configuration 3A

NOTE: Similar to V5 with radius on TE upper corner and LE lower corner where vertical meets fuselage.

Model Scale = .030

DRAWING NUMBER: VL70-000140A
VL70-000146A

DIMENSIONS:	FULL-SCALE	MODEL SCALE
TOTAL DATA		
Area (Theo) Ft^2	413.253	0.37193
Planform		
Span (Theo) In	315.720	9.47160
Aspect Ratio	1.675	1.675
Rate of Taper	0.507	0.507
Taper Ratio	0.40399	0.40399
Sweep Back Angles, degrees		
Leading Edge	45.00	45.00
Trailing Edge	25.947	25.947
0.25 Element Line	41.130	41.1300
Chords:		
Root (Theo) WP	268.500	8.05500
Tip (Theo) WP	108.470	3.25410
MAC	199.80856	5.99423
Fus. Sta. of .25 MAC	1463.50	43.9050
W. P. of .25 MAC	635.522	19.06566
B. L. of .25 MAC	0.00	0.00
Airfoil Section		
Leading Wedge Angle Deg	10.00	10.00
Trailing Wedge Angle Deg	14.920	14.920
Leading Edge Radius (Min) - IN.	2.00	0.060
Void Area	13.17	0.01185
Blanketed Area	0.00	0.00

ORIGINAL PAGE IS OF POOR QUALITY

TABLE III. - Concluded.

MODEL COMPONENT: WING-W_{116}

GENERAL DESCRIPTION: Configuration 4

NOTE: Identical to W_{114} except airfoil thickness. Dihedral angle is along trailing edge of wing.

Model Scale = .030

TEST NO.

DWG. NO. VL70-000140B VL70-000200

DIMENSIONS:	FULL-SCALE	MODEL SCALE
TOTAL DATA		
Area (Theo.) Ft^2		
Planform	2690.00	2.4210
Span (Theo In.	936.6816	28.10045
Aspect Ratio	2.265	2.265
Rate of Taper	1.177	1.177
Taper Ratio	0.200	0.200
Dihedral Angle, degrees(at X_o=1506.623,Y_o=	3.500	3.500
Incidence Angle, degrees 105, Z_o= 282.75)	0.500	0.500
Aerodynamic Twist, degrees	+3.000	+3.000
Sweep Back Angles, degrees		
Leading Edge	45.00	45.00
Trailing Edge	-10.056	-10.056
0.25 Element Line	35.209	35.209
Chords:		
Root (Theo) B.P.0.0.	689.2429	20.67729
Tip, (Theo) B.P.	137.8486	4.13546
MAC	474.8117	14.24435
Fus. Sta. of .25 MAC	1126.721	33.80163
W.P. of .25 MAC	291.00	8.73000
B.L. of .25 MAC	187.33491	5.62005
EXPOSED DATA		
Area (Theo) Ft^2	1812.2205	1.63010
Span, (Theo) In. BP108	736.6816	22.10045
Aspect Ratio	2.058	2.058
Taper Ratio	0.2451	0.2451
Chords		
Root BP108	570.6230	17.11869
Tip 1.00 $\frac{b}{2}$	137.8512	4.13554
MAC	354.2376	10.62713
Fus. Sta. of .25 MAC	1164.237	34.92711
W.P. of .25 MAC	292.00	8.76000
B.L. of .25 MAC	239.67786	7.19034
Airfoil Section (Rockwell Mod NASA) XXXX-64		
Root $\frac{b}{2}$ = 0.425	0.113	0.113
Tip $\frac{b}{2}$ = 1.00	0.12	0.12
Data for (1) of (2) Sides		
Leading Edge Cuff		
Planform Area Ft^2	118.333	0.10650
Leading Edge Intersects Fus M. L. @ Sta	505.0	15.15000
Leading Edge Intersects Wing @ Sta	1003.5	30.10500

ORIGINAL PAGE IS OF POOR QUALITY

TABLE IV. - ORBITER FUSELAGE PRESSURE ORIFICE LOCATIONS

	ORBITER X_o IN.			RADIAL LOCATION Ø DEGREES																		
	FULL	MODEL	Xo/lo	o	20	40	55	70	90	105	110	120	135	140	150	151	156	162	165	169	174	180
	235	7.05	0	6																		
	245	7.35	.008	7					8													9
	265	7.95	.023	10	11	12	13	14	15			16			17							18
	295	8.85	.047	19	20	21	22	23	24			25			26							27
	325	9.75	.070	28	29	30	31	32	33			34			35							36
	380	11.40	.112	37	38	39	40	41	42			43			44							45
	440	13.20	.159																		46	
	450	13.50	.167	47	48	49	50	51	52			53					54			55		56
	465	13.95	.178													57		58				
	500	15.00	.205	59	60	61	62	63	64			65		66	67				68			69
	560	16.80	.252	70		71		72	73			74			75				76			77
	625	18.75	.301	78		79		80	81			82			83				84			85
	725	21.75	.379	86		87		88	89			90			91				92			93
	880	26.40	.499	94		95		96	97			98			99				100			101
	980	29.40	.576	102		103																
	1080	32.40	.653	104		105		106	107			108			109				110			111
	1180	35.40	.730	112		113		114	115			116			117							118
	1245	37.35	.781	119		120		121	122	123		124	125		126				127			128
	1300	39.00	.823	129		130		131	132	133		134	135		136							137
	1375	41.25	.882	138		139		140	141	142		143	144		145				146			
	1430	42.90	.923	147		148		149	150	151		152	153		154				155			
	1480	44.40	.963	156		157		158	159	160		161	162		163				164			
a	1530	45.90	1.002								165	166										
b	1530	45.90	1.002								167	168										
	1555	46.65	1.021	169		170																
c	1590	47.70	1.048	171		172																
d	1590	47.70	1.048	173		174																

ℓo = 1293.3 full scale

ℓ_o = 38.799 model

a: OMS pod, inside

b: OMS pod, outside

c: Body flap lower surface

d: Body flap upper surface

data in datasets RB1BXX

ORIGINAL PAGE IS
OF POOR QUALITY

TABLE V. - ORBITER WING PRESSURE ORIFICE LOCATIONS

ORBITER WING

ORBITER B.P. ~ Y_o			X/C ~ LOCAL WING CHORD																																											
FULL	MODEL	D		0	.02	.04	.05	.08	.081	.086	.094	.15	.163	.17	.229	.246	.250	.274	.362	.390	.400	.402	.497	.55	.565	.60	.65	.70	.725	.75	.760	.775	.808	.834	.85	.857	.865	.90	.905	.95	.955	.965
140	4.20	.299	U				180				181				182				183									185						186			187	188				189
			L.E.	179																																									
			L				190				191				192				193				195					195						196			197	198				199
170	5.10	.364	U			201				202						204[1]				205[2]																								
			L.E.	200																																									
			L			206				207			208			209				210																								
200	6.00	.427	U		212[3]	213[4]				214				215				216				217									219		220			221			222		223	
			L.E.	211																																									
			L		224[3]	225[4]				226				227				228				229			230						231		232			233			234		235	
250	7.50	.534	U		237		238	239				240					241				242			243					244			245			246			247		248		
			L.E.	236																																									
			L		249		250	251				252					253				254			255					256			257			258			259		260		
315	9.45	.673	U		262		263					264					265				266			267				268				269			270					271			
			L.E.	261																																									
			L		272		273					274					275				276			277				278				279			280					281			
365	10.95	.780	U		283		284					285					286										287			288					289						290		
			L.E.	282																																									
			L		291		292					293					294										295			296					297						298		
415	12.45	.887	U		300		301					302					303				304					305				306								307				
			L.E.	299																																									
			L		308		309					310					311				312					313				314								315				

1 X/c = .19
2 X/c = .34
3 X/c = .03
4 X/c = .045

data in data sets RB1LXX (lower surface and RB1UXX (upper surface)

TABLE VI. - ORBITER VERTICAL TAIL PRESSURE ORIFICE LOCATIONS

ORBITER VERTICAL TAIL

VERTICAL $W_L \sim Z_o$				X/C_V								
FULL	MODEL	η_V		0	.025	.05	.15	.30	.52	.685	.775	.90
550	16.50	.158	RH			324	325	326	327	328	329	
			LE	316								
			LH		317	318	319	320	321	322	323	
600	18.00	.316	RH			339	340	341	342	343	344	345
			LE	330								
			LH		331	332	333	334	335	336	337	338
690	20.70	.600	RH			355	356	357	358	359	360	361
			LE	346								
			LH		347	348	349	350	351	352	353	354
765	22.95	.840	RH			371	372	373	374	375	376	377
			LE	362								
			LH		363	364	365	366	367	368	369	370
792	23.76	.925	RH			387	388	389	390	391	392	393
			LE	378								
			LH		379	380	381	382	383	384	385	386

data in datasets RB1VXX (left side) and RB1RXX (right side)

TABLE VII. - ORBITER BASE, BODYFLAP, AND OMS NOZZLE PRESSURE ORIFICE LOCATIONS

ORBITER BASE

LOCATION	ORIFICE NUMBER
Orbiter Sting Cavity	1
Orbiter Base (Lower Left Corner)	2
OMS Nozzle Base	3

data in datasets RB1CXX

RUDDER FLARE BASE

RUDDER $W_L \sim Z_o$		X/C_V
FULL	MODEL	.75
725	18.75	4
625	21.75	5

data in datasets RB1CXX

BODY FLAP

ORBITER $\sim X_o$		$\emptyset \sim$ Deg	
FULL	MODEL	0	40
1555	46.65	169	170
1590	47.70	Upper 173	174
1590	47.70	Lower 171	172

data in datasets RB1FXX

LEFT OMS NOZZLE SURFACE

X ~ IN. FWD. NOZZLE EXIT		$\emptyset \sim$ DEG.		
FULL	MODEL	135	180	225
10	.30	175	176	177
20	.60		178	

data in datasets RB1EXX

TABLE VIII. - EXTERNAL TANK PRESSURE ORIFICE LOCATIONS

EXTERNAL TANK

TANK STATION ~ X_T			Ø ~ DEG.									
FULL SCALE	MODEL SCALE	$\frac{X_T}{\ell_T}$	0	30	60	90	120	135	150	165	180	270
309	9.27	0	503									
324	9.72	.008	504			505					506	507
400	12.00	.049	508	509	510	511	512		513		514	
520	15.60	.113	515	516	517	518	519		520	521	522	
640	19.20	.178	523	524	525	526	527		528	529	530	
670	20.10	.194	531	532	533	534	535		536	537	538	
710	21.30	.215	539	540	541	542	543		544	545	546	
760	22.80	.242	547	548	549	550	551	552	553	554	555	
850	25.50	.290	556	557	558	559	560		561	562	563	564
950	28.50	.344	565	566	567		568	569	570	571	572	
1050	31.30	.394	573	574	575	576	577		578	579	580	
1150	34.50	.451	581	582	583	584	585	586	587	588	589	
1250	37.50	.505	590	591	592	593	594		595	596	597	
1350	40.50	.558	598	599	600	601	602	603	604	605	606	
1500	45.00	.638	607	608	609	610	611		612	613	614	
1700	51.00	.746	615	616	617	618	619	620	621	622	623	
1900	57.00	.853	624	625	626	627	628	629	630	631	632	
2040	61.20	.928	633	634	635		636	637	638	639	640	
TANK BASE STING CAVITY			501								502	

ℓ_T = 1865 IN. FULL SCALE
55.950 IN. MODEL SCALE

data in datasets RB1TXX

TABLE IX. - SRM PRESSURE ORIFICE LOCATIONS

LEFT SRM

SRM STATION ~ X_s			Ø ~ DEG.							
FULL SCALE	MODEL SCALE	$\frac{X_s}{\ell_s}$	0	45	90	135	180	225	270	315
200	6.00	0	805							
260	7.80	.034	806	807	808	809	810	811	812	813
370	11.10	.098	814	815	816	817	818	819	820	821
400	12.00	.115	822	823	824	825	826	827		828
450	13.50	.144	829	830	831	832	833	834	835	836
550	16.50	.201	837	838	839	840	841	842	843	844
700	21.00	.287	845		846		847	848	849	850
850	25.50	.373	851		852		853		854	
1050	31.50	.488	855		856		857			
1250	37.50	.603	858		859		860			
1450	43.50	.718	861		862		863		864	
1650	49.50	.833	865		866		867		868	
1750	52.50	.890	869	870	871	872	873	874	875	876
1796	53.88	.917	877	878	879	880	881	882	883	884
1835	55.05	.939	885	886	887	888	889	890	891	892
1868	56.04	.958	893	894	895	896	897	898	899	900
SKIRT BASE			802			803		804		
NOZZLE BASE			801							
NOZZLE EXTERNAL PRESSURES										
1850	55.50	.948	901	902	903	904	905	906	907	908
1905	57.15	.979	909	910	911	912	913	914	915	916
1923	57.84	.993	917	918	919	920	921	922	923	924

ℓ_s = 1741 IN. FULL SCALE
52.53 IN. MODEL SCALE

data in datasets RB1SXX

TABLE X. - ORBITER ATTACH POINT PRESSURE ORIFICE LOCATIONS

ORBITER ATTACH POINT ORIFICE LOCATIONS

	X_o FULL SCALE		347	357	367	377	387	397	407	1252	1262	1272	1282	1292	1302	1312	1322	1332
	X_o MODEL		10.41	10.71	11.01	11.31	11.61	11.91	12.21	37.56	37.86	38.16	38.46	38.76	39.06	39.36	39.96	40.26
	X_o/L_o		.087	.095	.102	.110	.118	.126	.133	.788	.796	.804	.811	.819	.827	.835	.850	.858
η	F.S. Y_o	MODEL Y_o	394	397					412				436	447		468	474	480
.021	10	.30		396	399	403	407	411	415				435	446	457	467	473	479
.043	20	.60		395	398	402	406	410	414				434	445	456	466	472	478
.064	30	.90				401	405	409	413				433	444	455	465	471	477
.085	40	1.20											432	443	454	464	470	476
.107	50	1.50															469	475
.149	69.75	2.09											431	442	453	463		
.170	79.75	2.39										424	430	441	452	462		
.192	89.75	2.69									419	423	429	440	451	461		
.213	[illegible]	2.99								416	418	422	428					
.234	[illegible]	3.29									417	421	427	439	450	460		
.256	119.75	3.59										420	426	438	449	459		
.277	129.75	3.89											425	437	448	458		

data in datasets R611XX

TABLE XI. - EXTERNAL TANK ATTACH POINT PRESSURE ORIFICE LOCATIONS

X_T Full Scale	1103	1093	1083	1073	1063	1053	1043	
X_T Model Scale	33.09	32.79	32.49	32.19	31.89	31.59	31.29	
X_T/l_T	.424	.419	.413	.408	.402	.397	.391	
								ϕ DEG.
FWD ATTACH POINT (ORBITER TO E-T)	684	676	668	660				182.84
	685	677	669	661				186.38
	686	678	670	662	655			189.92
	687	679	671	663	656	652		193.46
	688	680			657	653	651	197.0
	689	681	673	665	658	654		200.54
	690	682	674	666	659			204.08
	691	683	675	667				207.62

data in datasets RB12XX

TABLE XI. - EXTERNAL TANK ATTACH POINT PRESSURE ORIFICE LOCATIONS (CONTINUED)

	X_T FULL SCALE	1874	1864	1854	1844	1834	1824	1814	
	X_T MODEL SCALE	56.22	55.92	55.62	55.32	55.02	54.72	54.42	
	X_T/ℓ_T	.839	.834	.828	.823	.818	.812	.807	
									Ø ~ DEG.
		719	713	707					222.84
FWD DRAG LINK ATTACH POINT		720	714	708	701				226.38
		721	715	709	702	696			229.92
		722		710	703	697	693		233.46
					704	698	694	692	237.00
						699	695		240.54
		723	718	712	706	700			244.08

data in datasets RB12XX

TABLE XI. - EXTERNAL TANK ATTACH POINT PRESSURE ORIFICE LOCATIONS

(CONCLUDED)

	X_T FULL SCALE	2078	2068	2058	2048	2038	2028	2018	
	X_T MODEL SCALE	62.34	62.04	61.74	61.44	61.14	60.84	60.54	
	X_T/ℓ_T	.948	.943	.938	.932	.927	.921	.916	
									Ø ∿ DEG.
AFT UPPER ATTACH		777	766	754					234.04
		778	767	755	742				237.58
		779	768	756	743	732			241.12
		780	769		744	733	726		244.66
		781	770		745	734	727	724	248.2
					746	735	728		251.74
			771	759	747	736			255.28
AFT LOWER ATTACH		782	772	760					323.51
		783	773	761	748				327.05
		784	774	762	749	737			330.59
		785	775		750	738	729		334.13
		786	776		751	739	730	725	337.67
					752	740	731		341.21
				765	753	741			344.75

data in datasets RB12XX

Notes:

1. Positive directions of force coefficients, moment coefficients, and angles are indicated by arrows
2. For clarity, origins of wind and stability axes have been displaced from the center of gravity

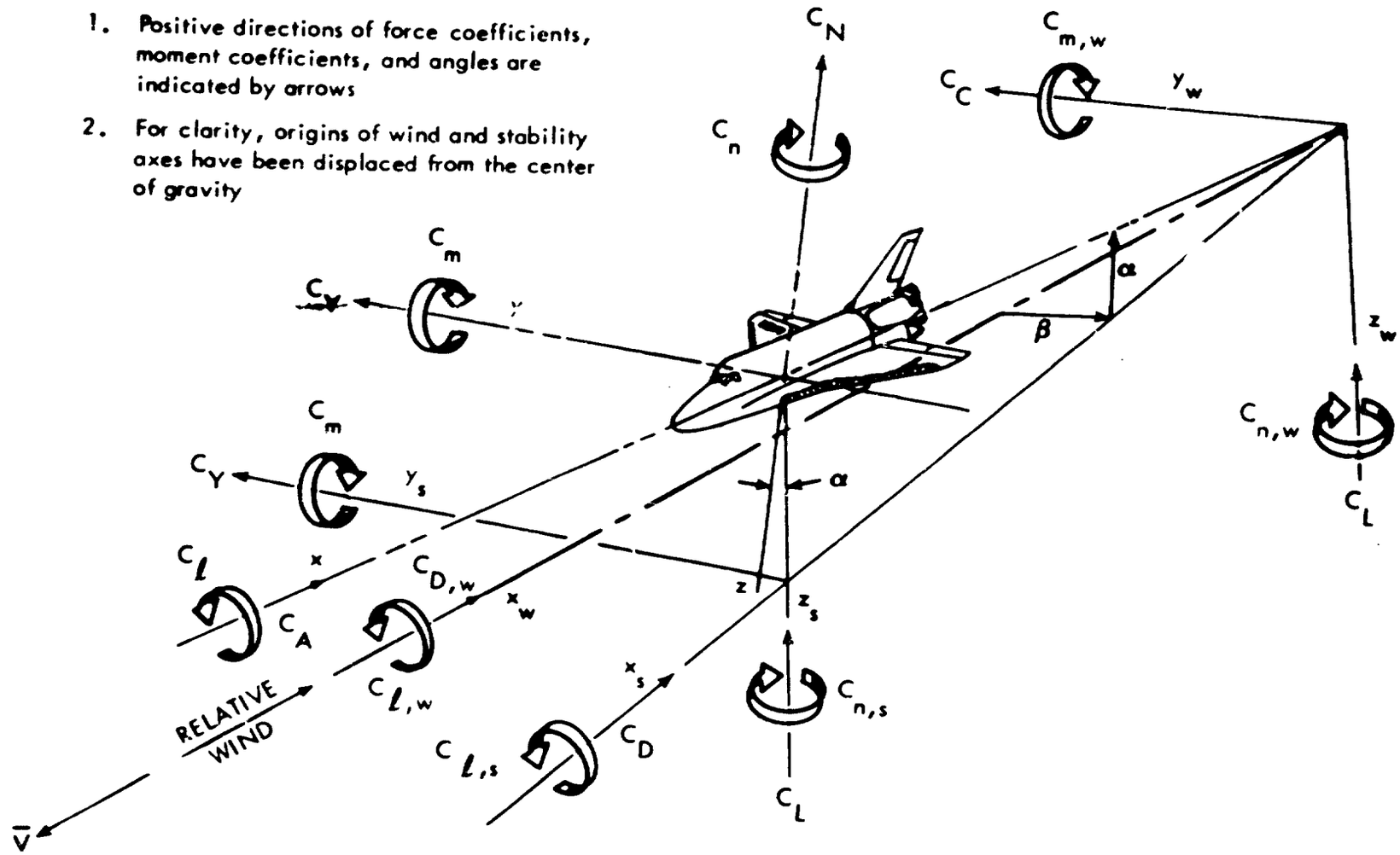

a. Stability and body axis systems

Figure 1. - Axis Systems

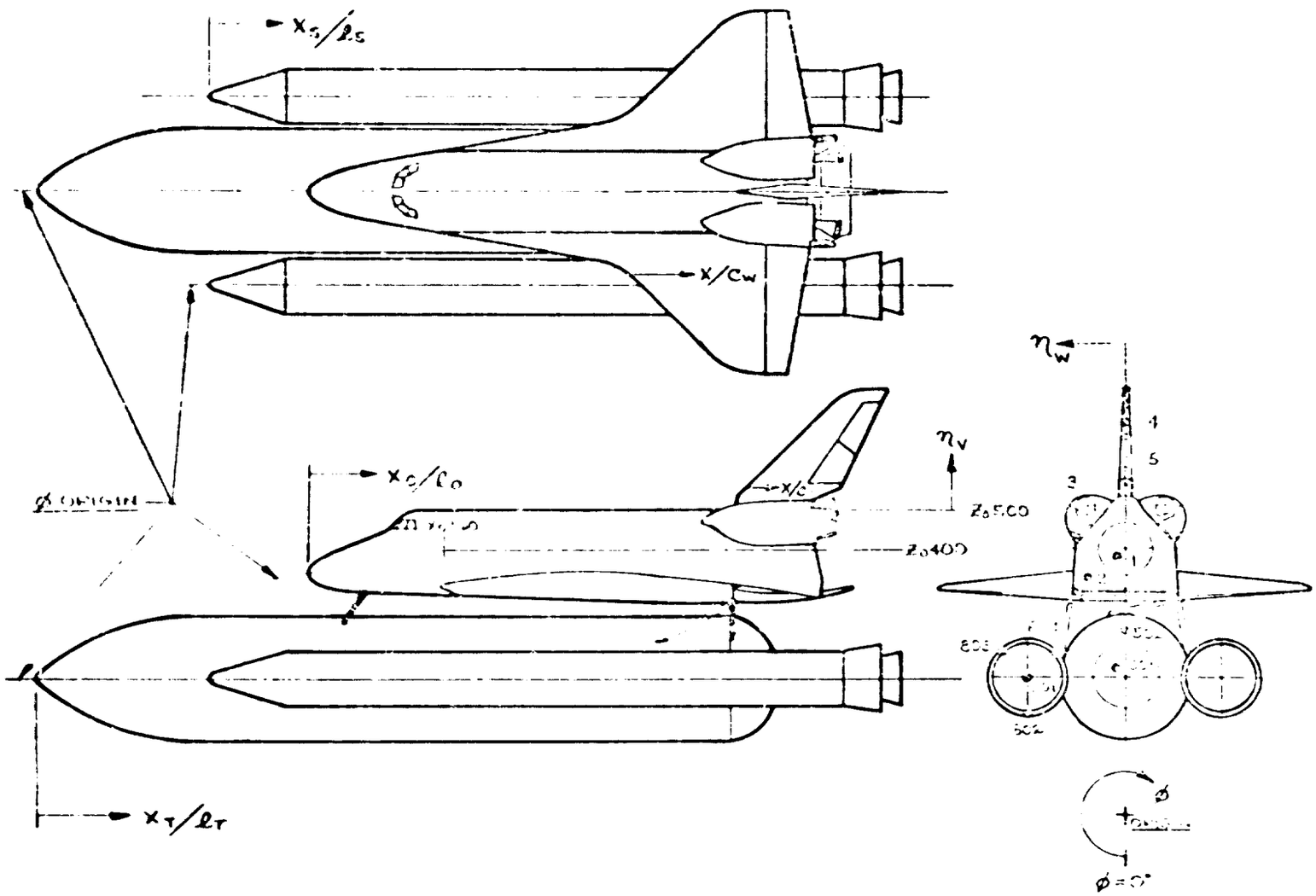

b. Orifice location nomenclature diagram

Figure 1. - Concluded

LV

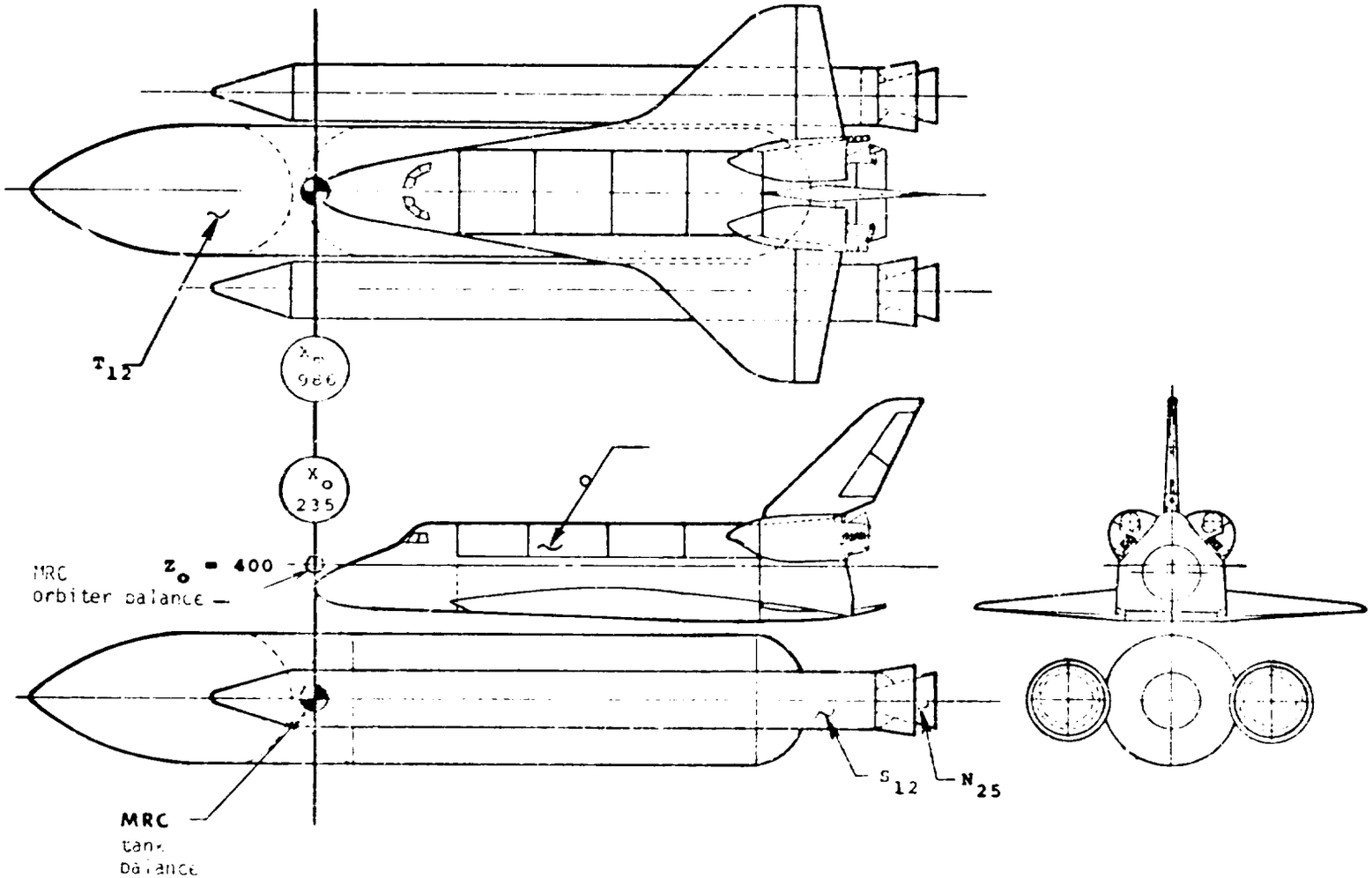

a. Integrated vehicle - 2 balances, no attach structure

Figure 2. - Model Sketches

LVAP

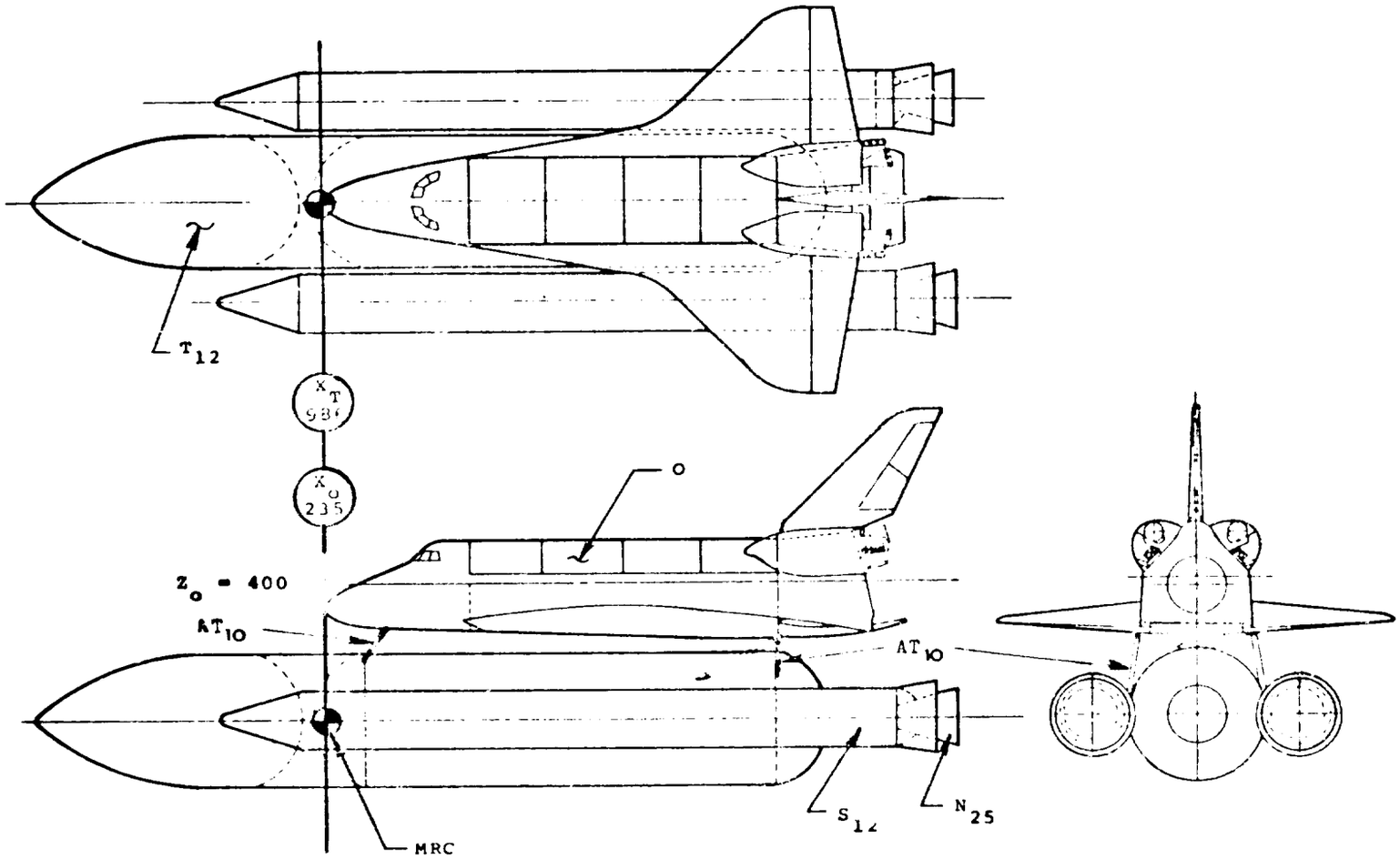

b. Integrated vehicle - 1 balance with attach structure

Figure 2. - Continued

LVAP

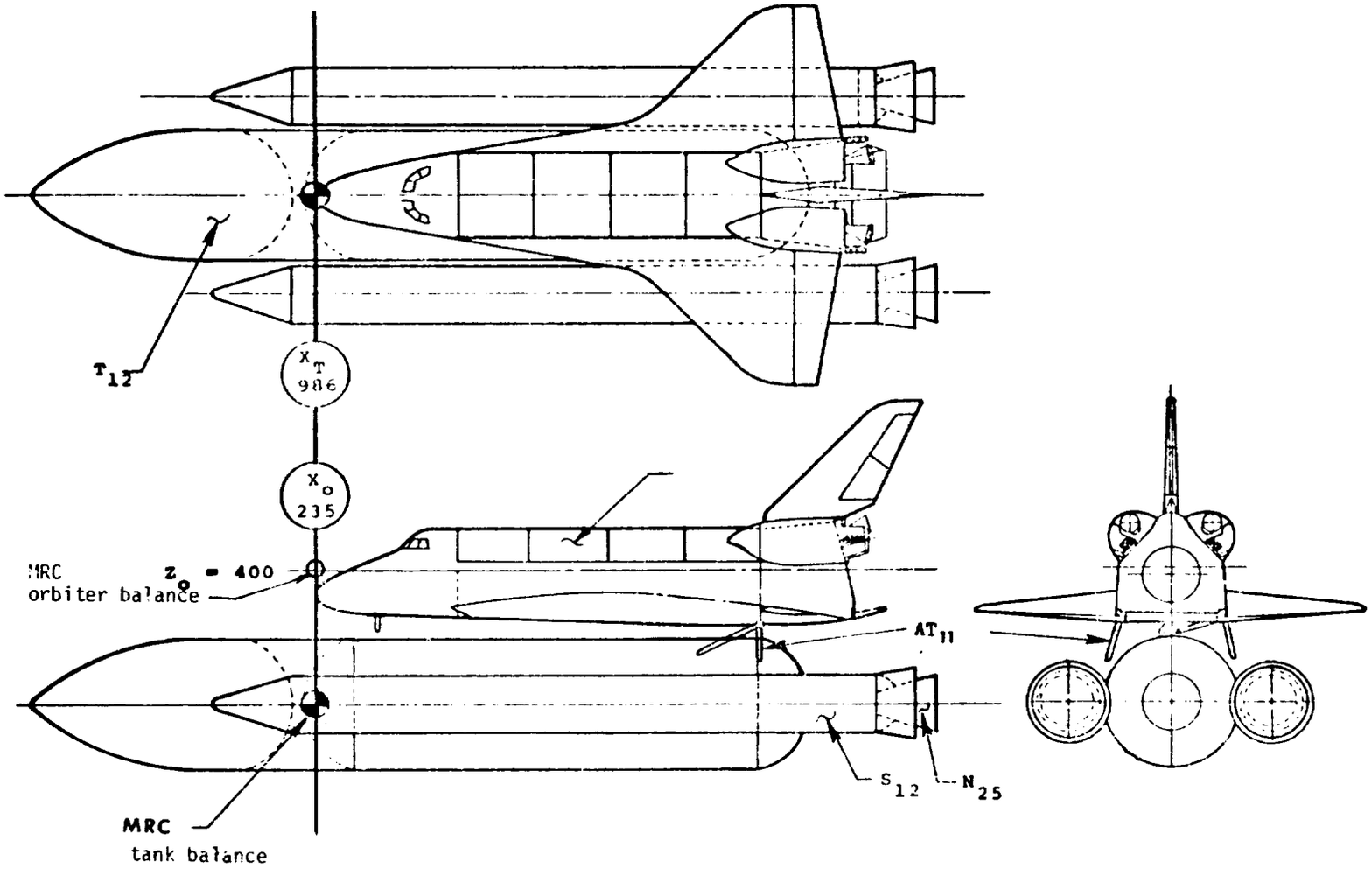

c. Integrated vehicle - 2 balances with attach structure

Figure 2. - Continued

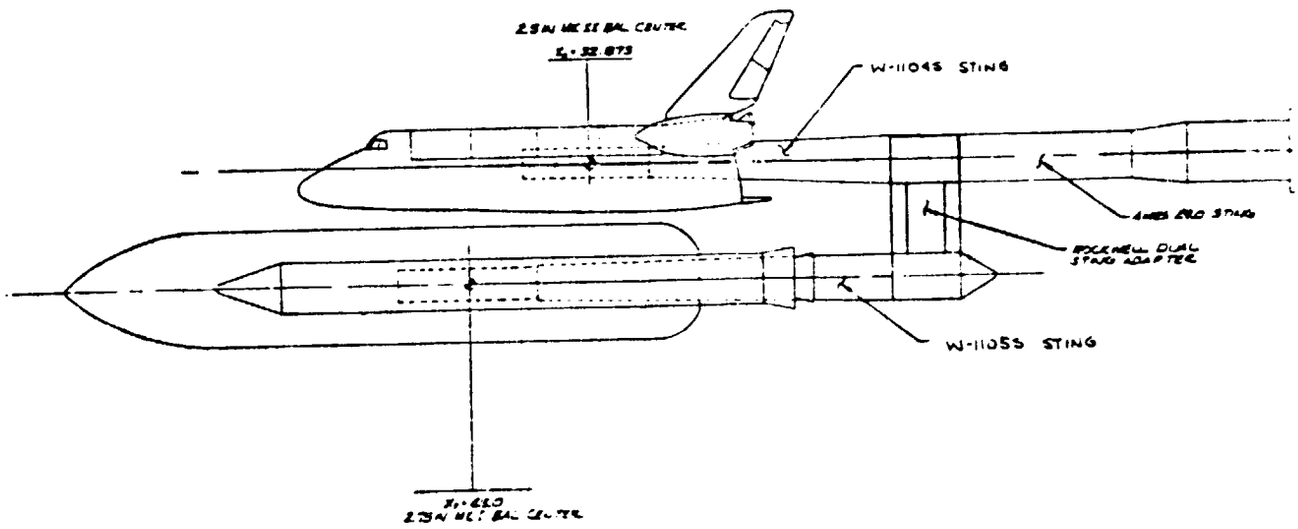

DUAL BALANCE CONFIGURATION ~ LV & LVAP

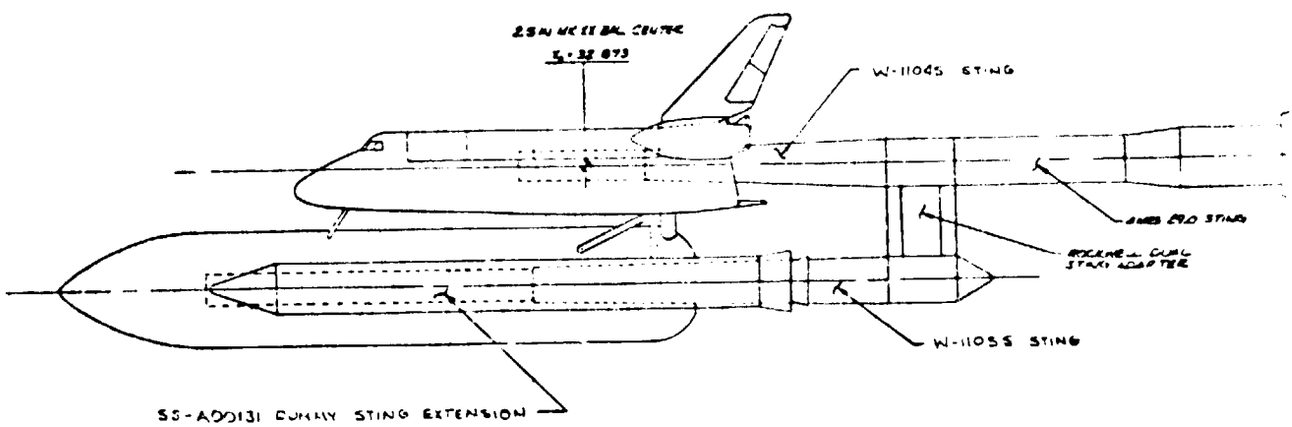

SINGLE BALANCE CONFIGURATION ~ LVA

d. Installation side views

Figure 2. - Continued

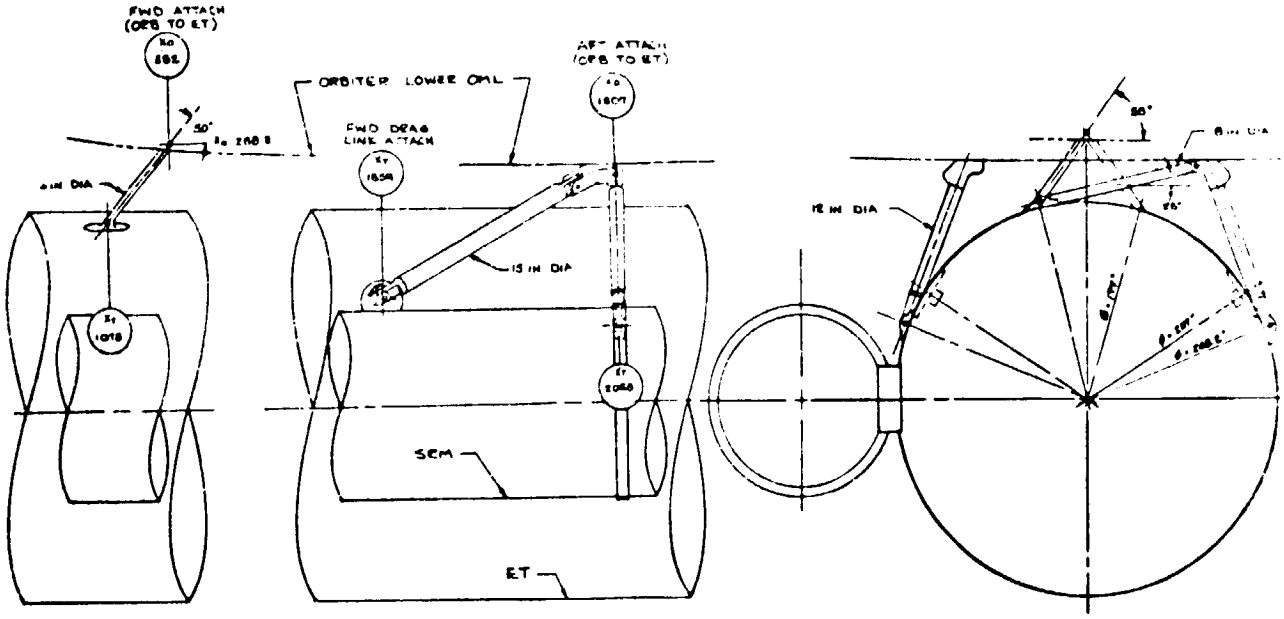

ATTACH HARDWARE CONFIGURATION — AT10

ATTACH HARDWARE CONFIGURATION — AT11

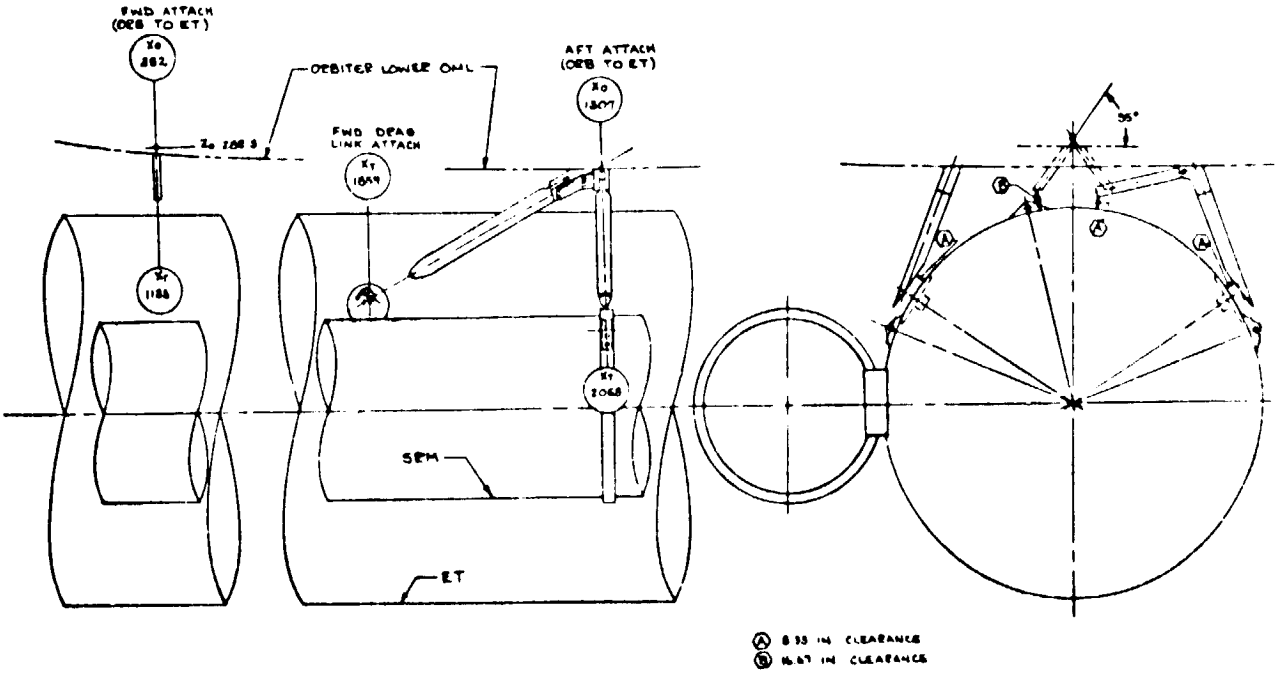

e. Attach hardware

Figure 2. Continued

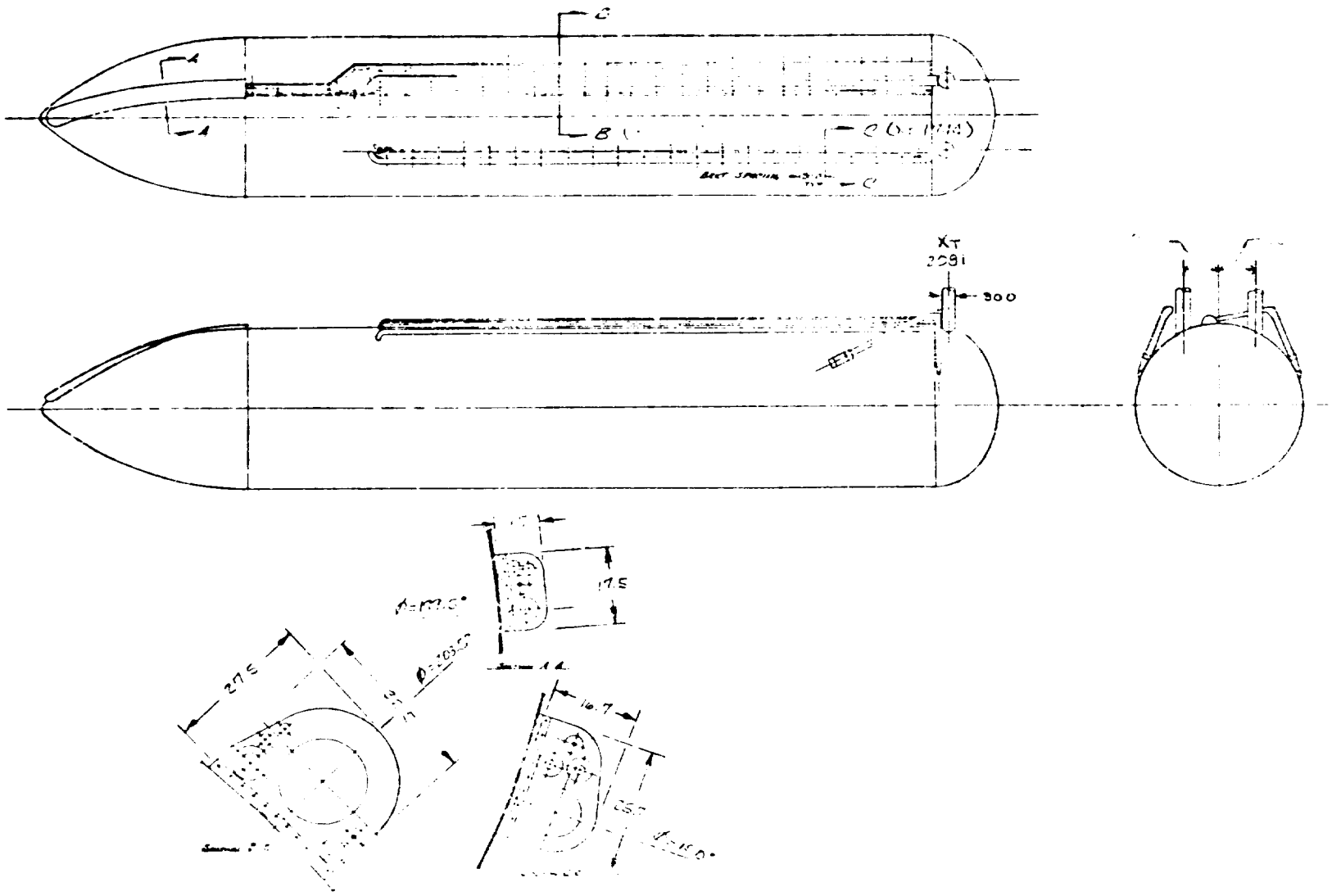

f. External tank protuberances

Figure 2. - Continued

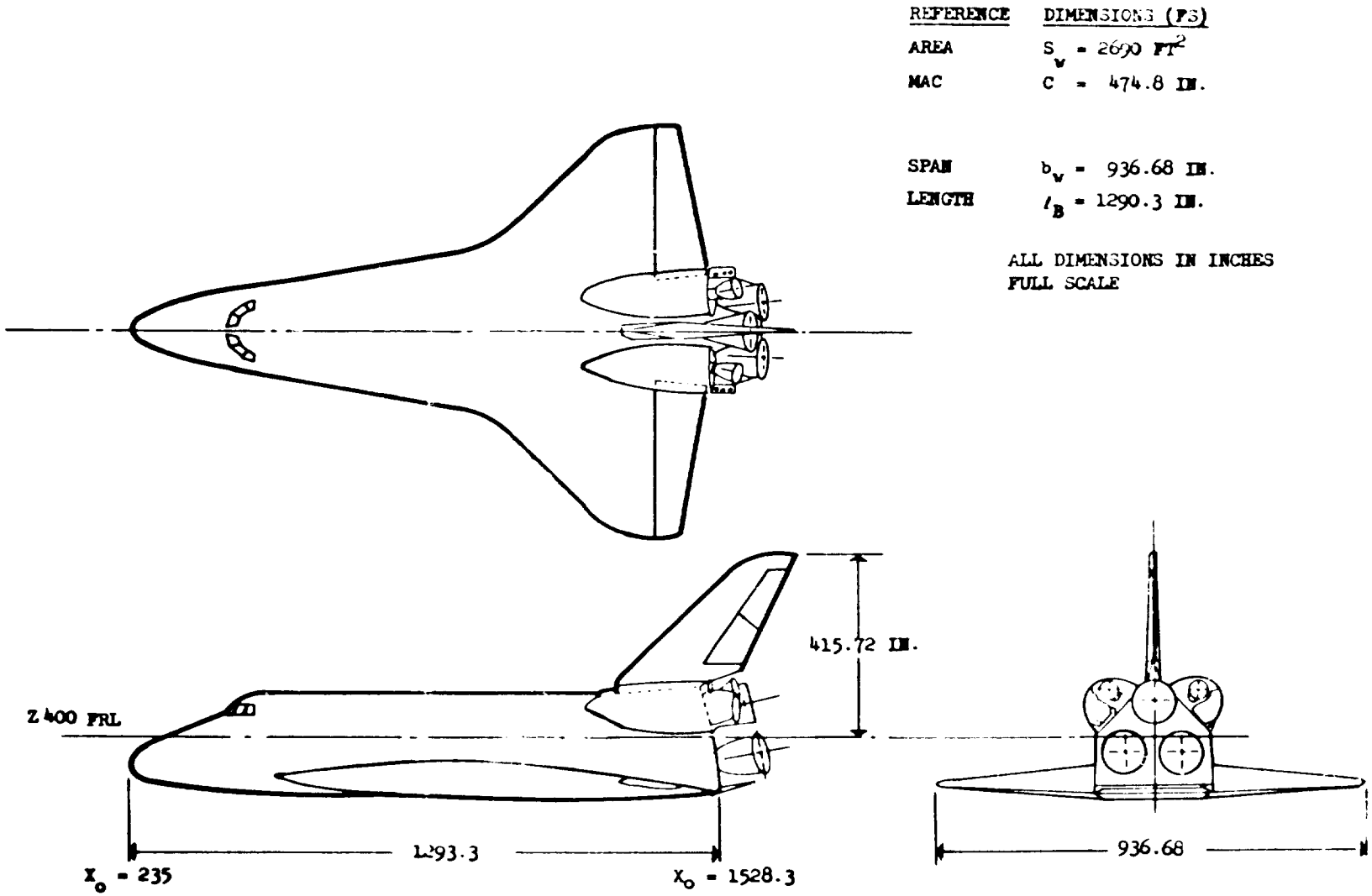

g. SSV orbiter configuration 140A/B

Figure 2. - Continued

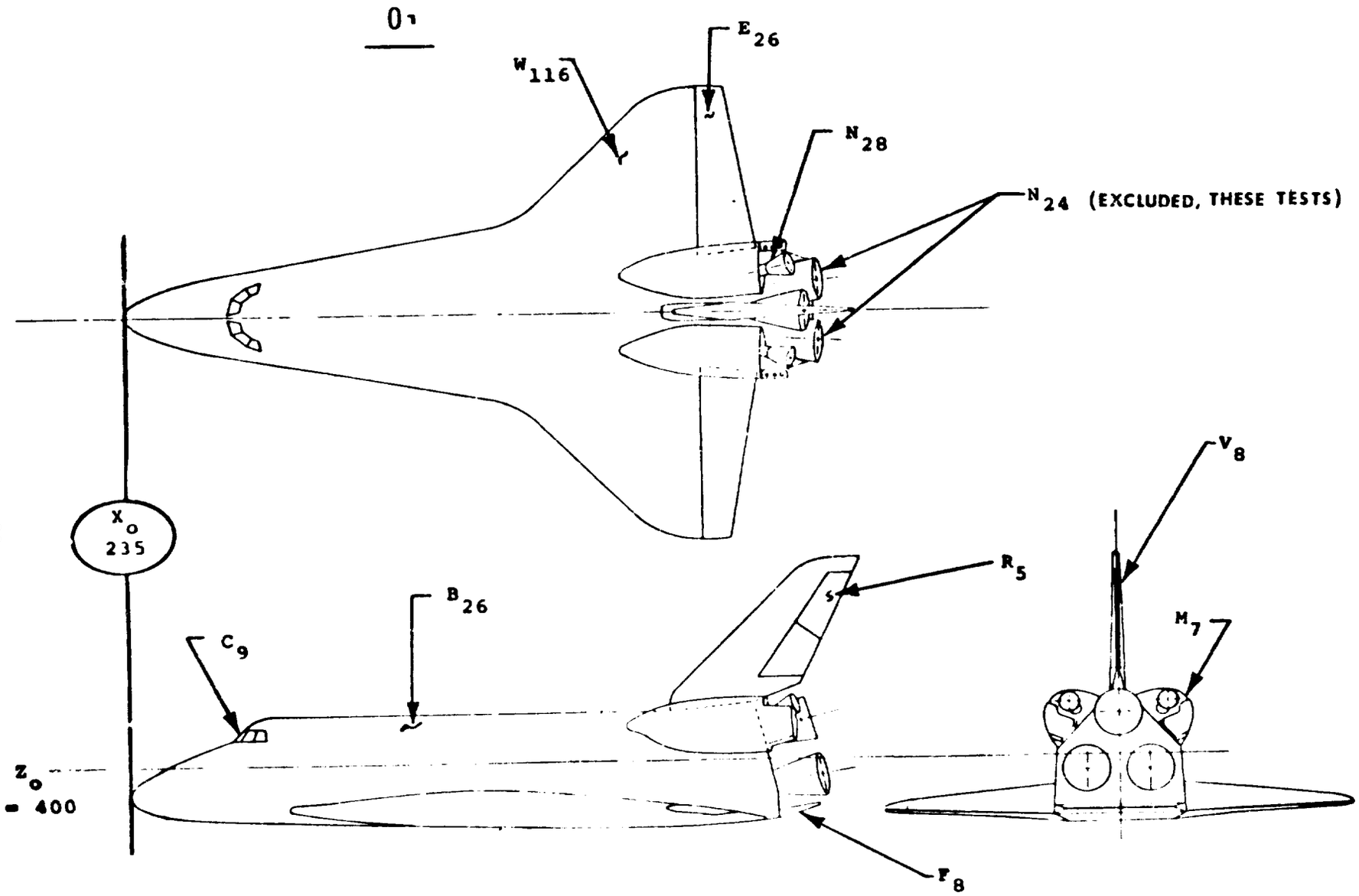

h. Orbiter nomenclature

Figure 2. - Continued

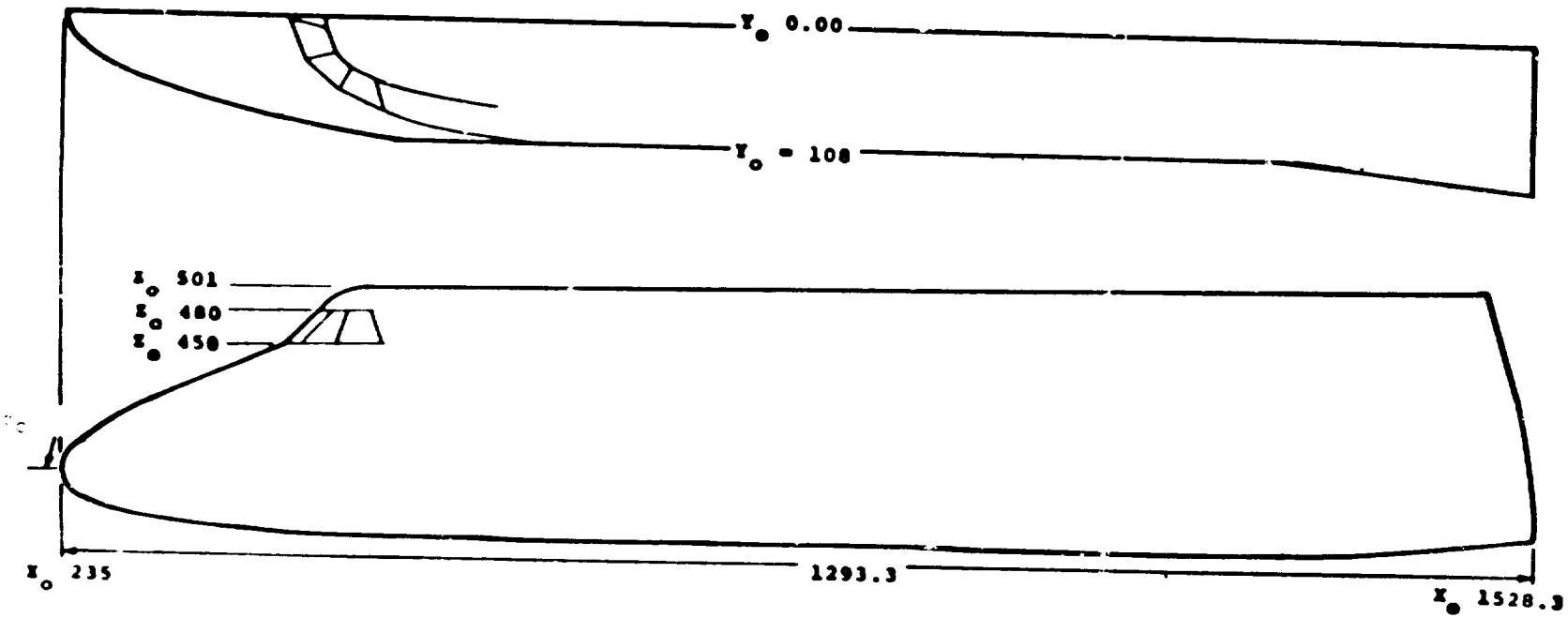

i. Canopy, C_9, and body, B_{26}, lines drawing VL70-00193 and VL70-000140A/B

Figure 2. - Continued

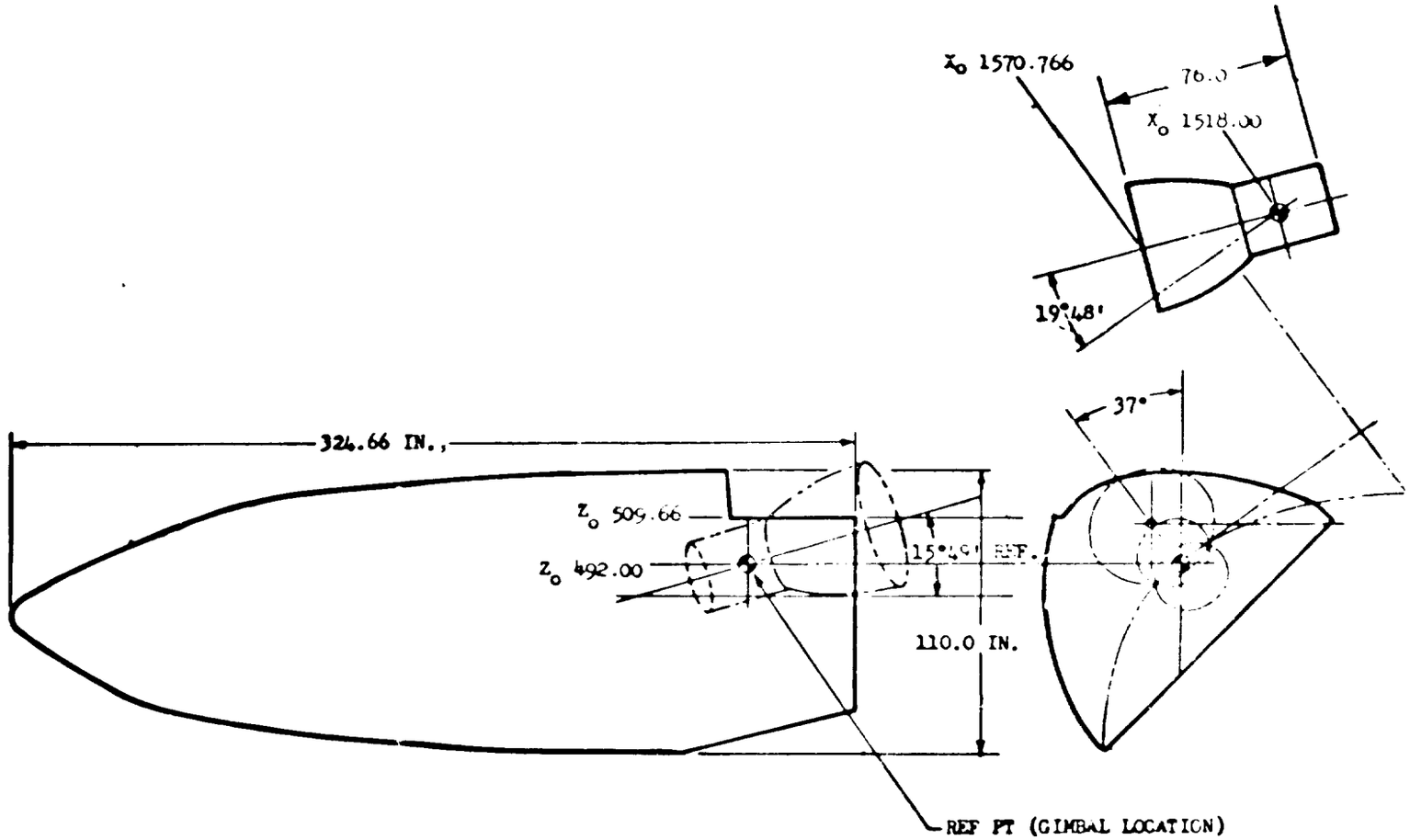

j. M_7 - OMS Pod

Figure 2. - Continued

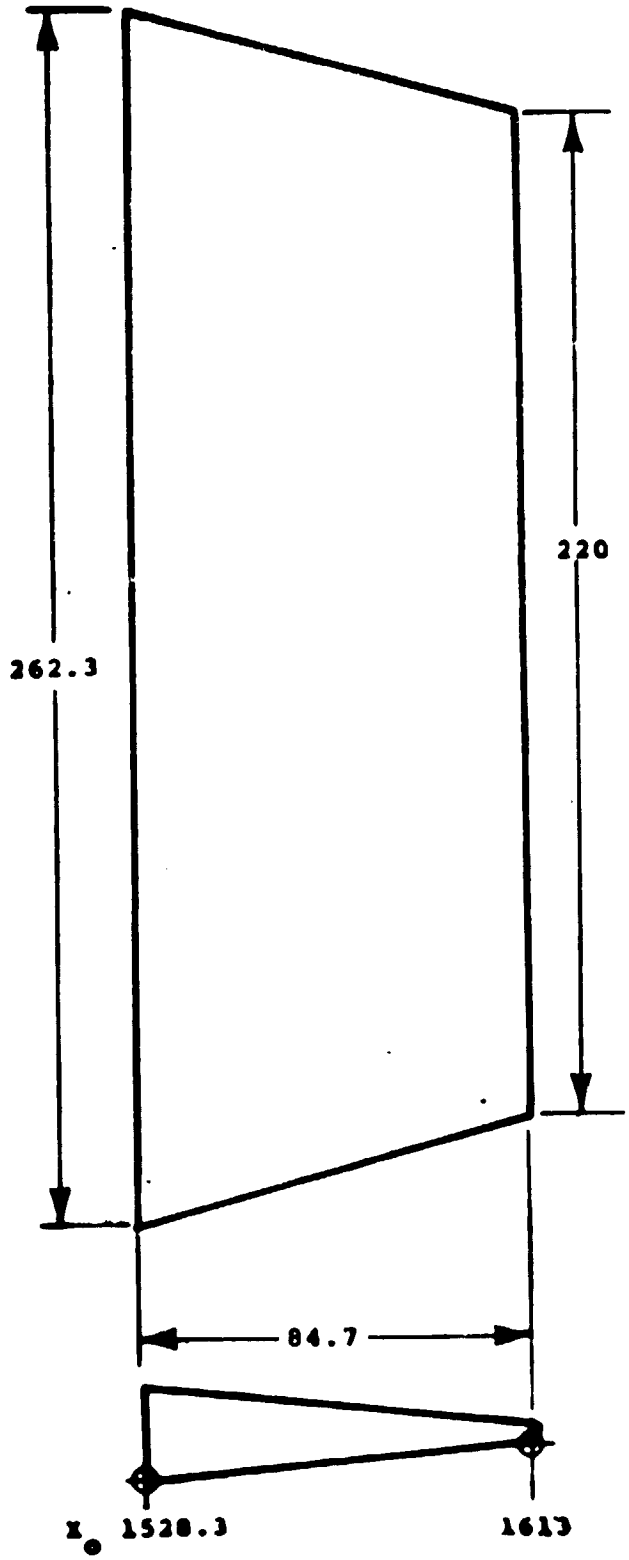

k. Body flap, F_8, lines drawing no. VL70-000140A/B

Figure 2. - Continued

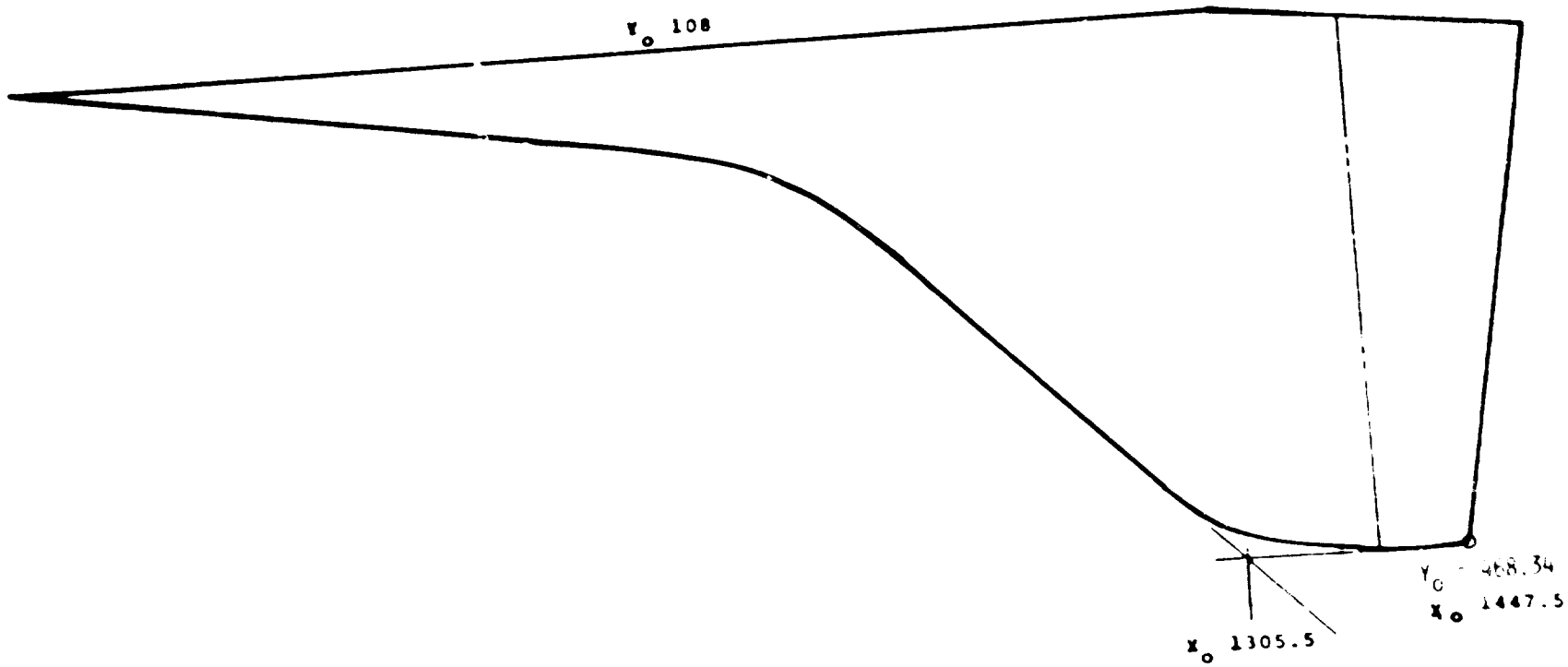

I. Wing, W_{116}, lines drawing no. VL70-000200

Figure 2. - Continued

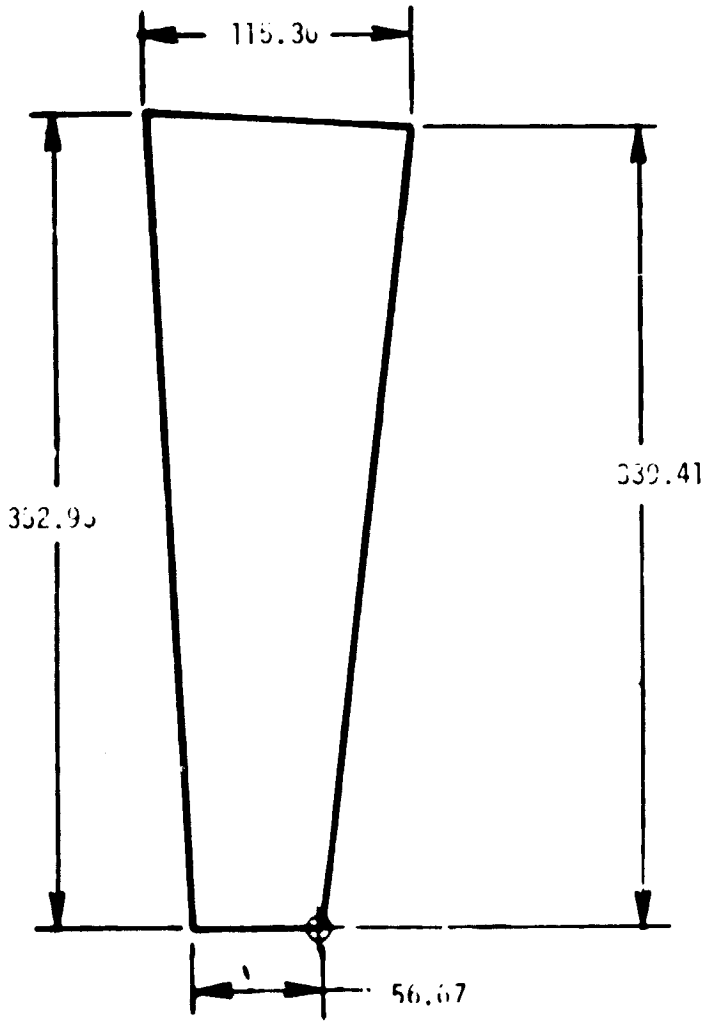

m. Elevon, E_{26}, lines drawing no. VL70-000200, VL70-000140A/B

Figure 2. - Continued

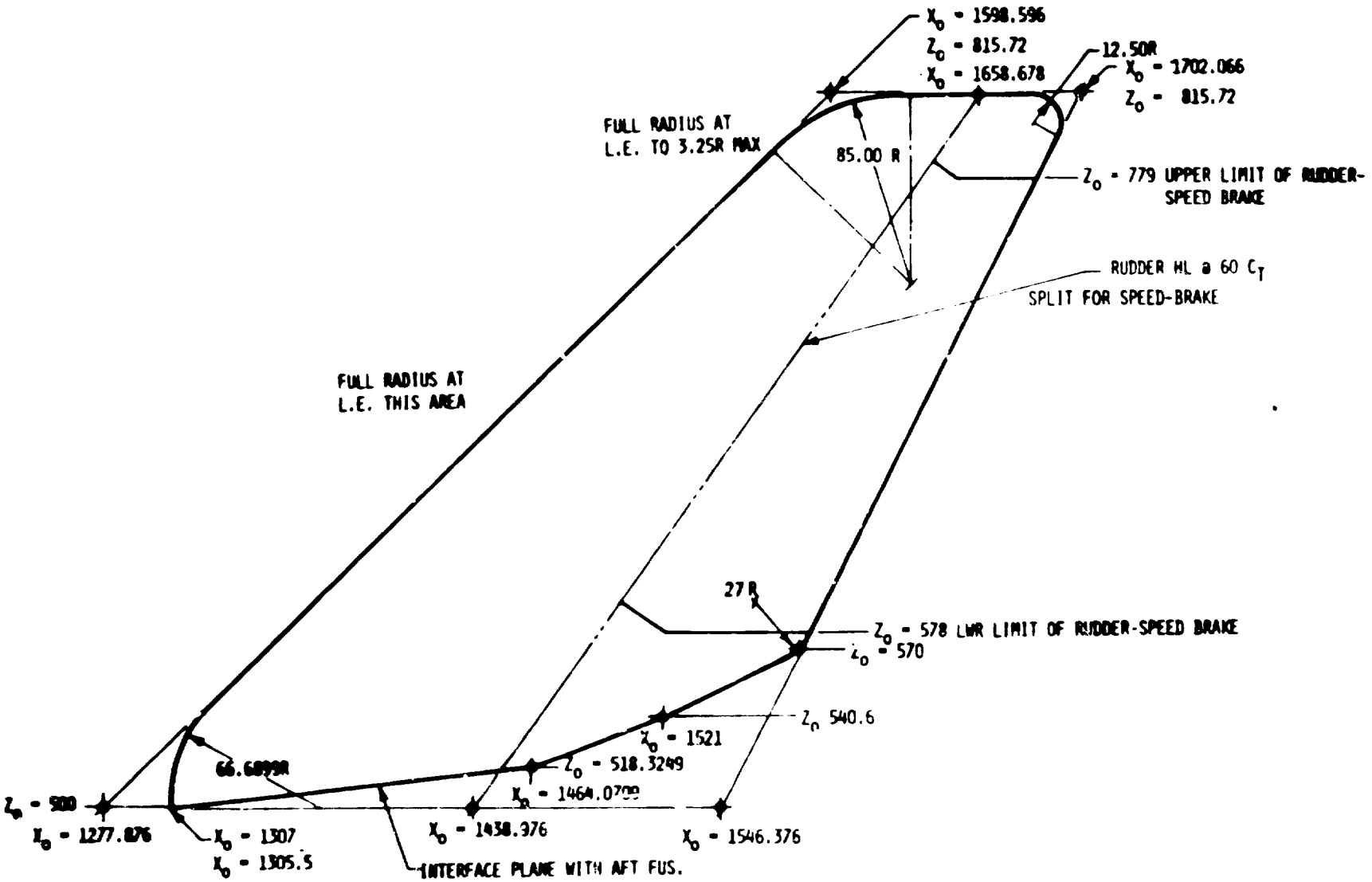

n. Vertical tail, V_8, and rudder, R_5, lines drawing no. 70-000146A

Figure 2. - Continued

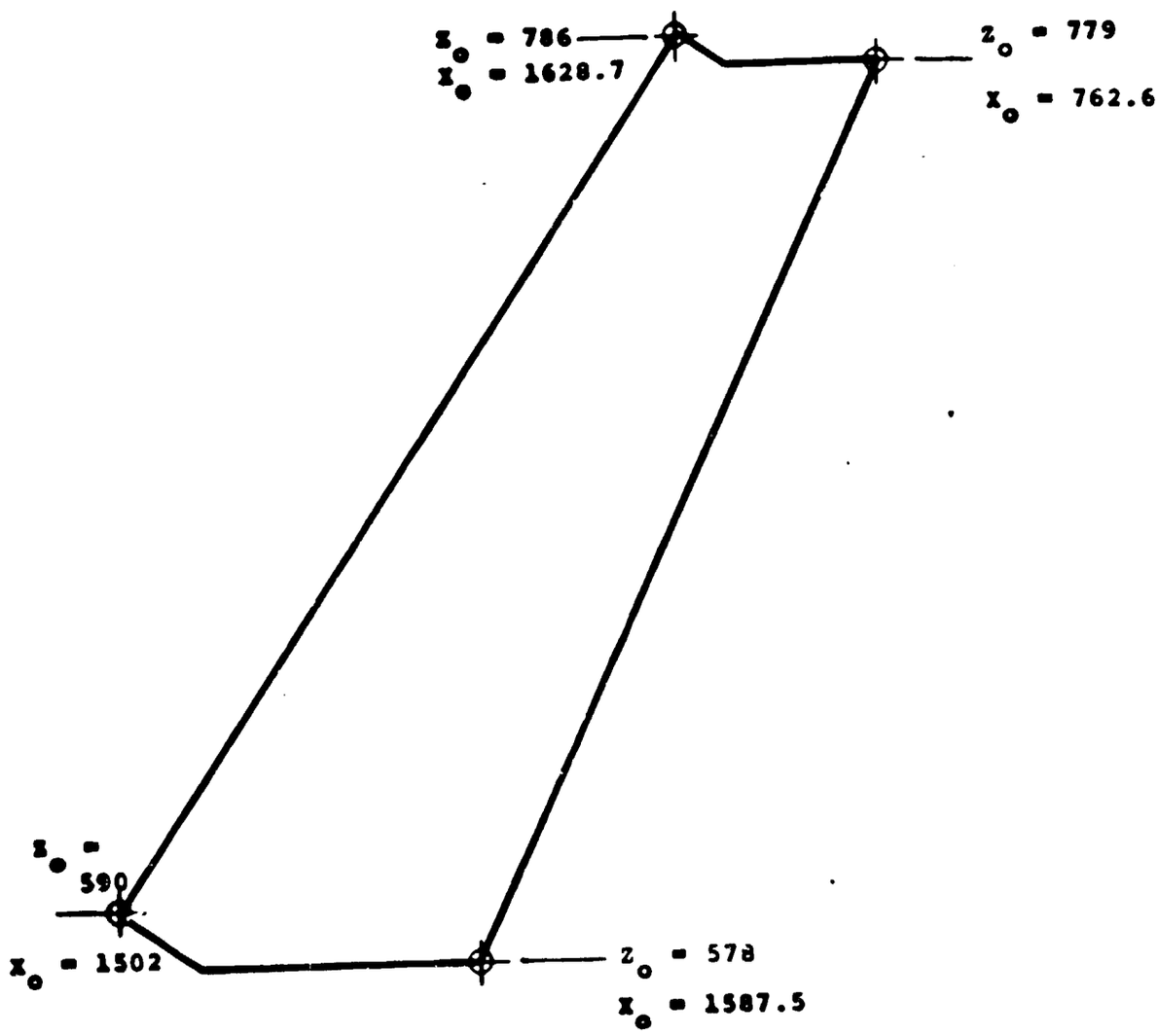

o. Rudder, R_5, lines drawing no. VL70-000095

Figure 2. - Concluded

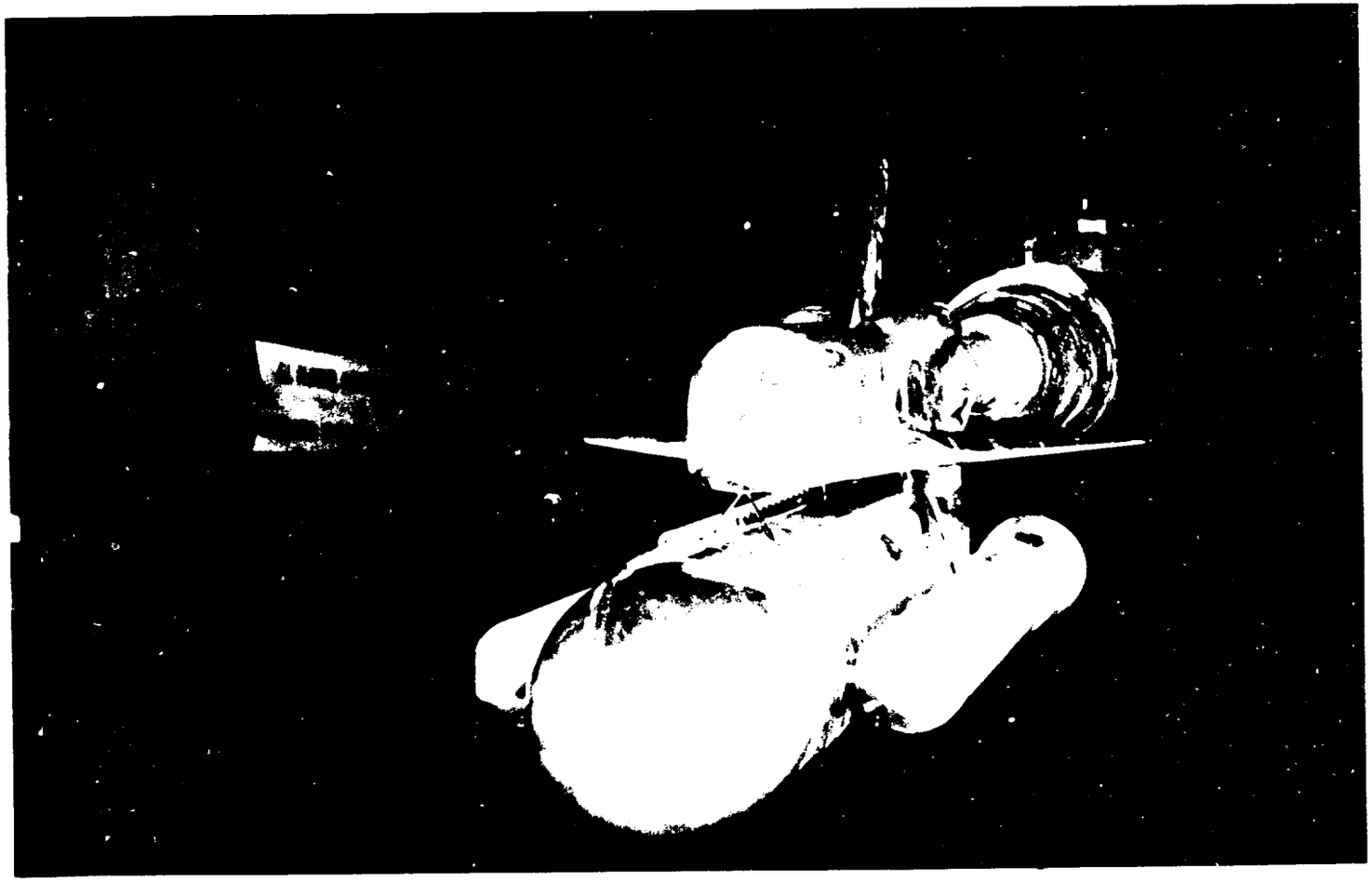

a. Front view of model installed in tunnel

Figure 3. - Model photographs.

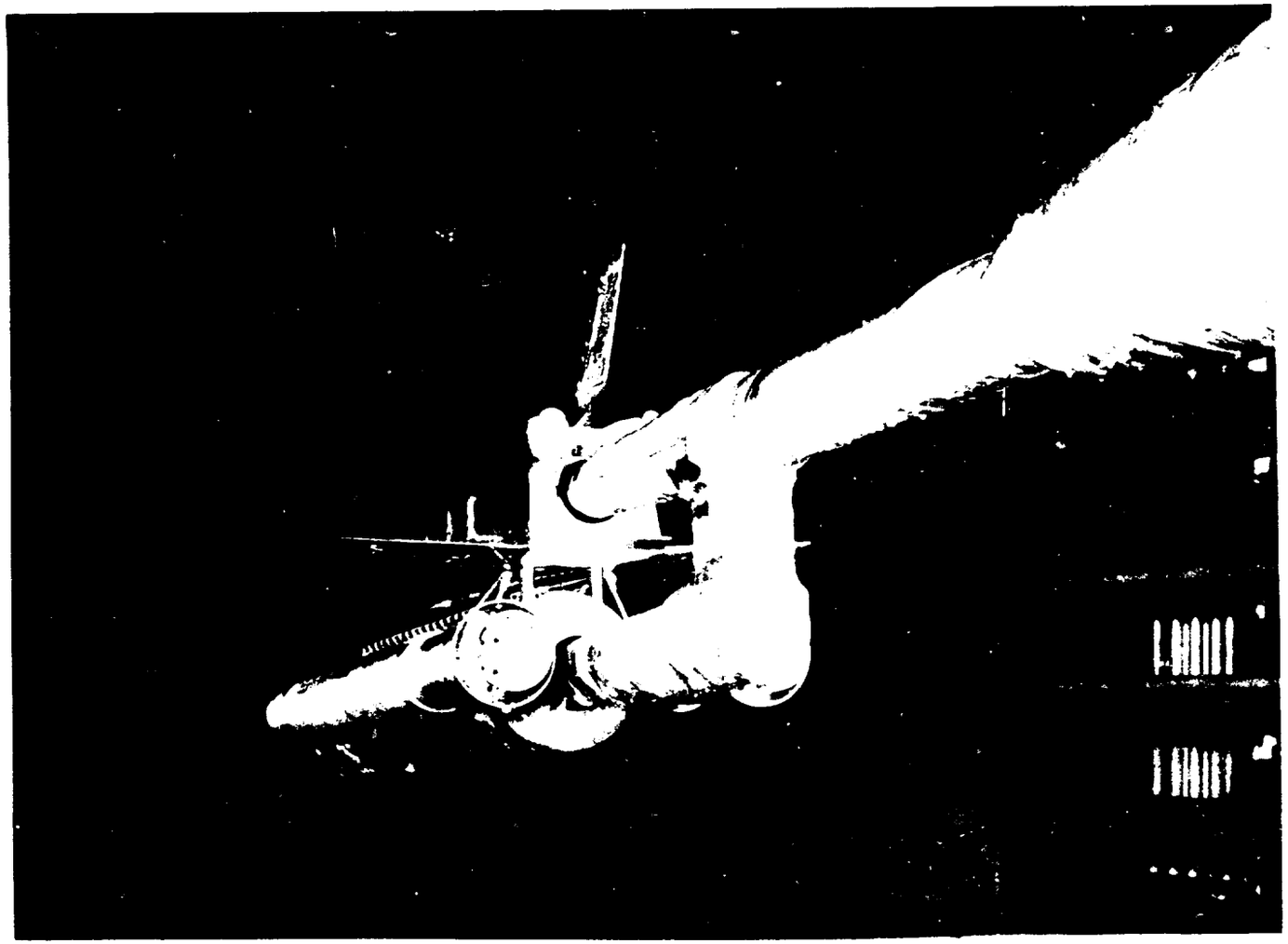

b. Rear view of model installed in tunnel

Figure 3. - Concluded.

TABULATED PRESSURE DATA

A3011 [illegible] .2+S1G+25+AT11 LEFT VERTICAL .RB1V57 [illegible]

REFERENCE DATA

SREF = 2.4210 SQ FT. [illegible] INCHES
LREF = 38.7090 INCHES YMRP = .0000 INCHES
BREF = 38.7090 INCHES ZMRP = .0000 INCHES
SCALE = .0300 SCALE

PARAMETRIC DATA

BETAD = [illegible] ELEVON = .000
RUDDER = .000 SPOBRK = .000

MACH (1) = .998 ALPHAO(1) = -8.175

SECTION (1)LEFT VERTICAL DEPENDENT VARIABLE CP

Z/BV	.1580	[illegible]	[illegible]	.8400	.9250
X/CV					
.000	.3294	.4942	.3681	.5427	.5464
.025	-.1266	-.2733	-.3390	-.3567	-.4579
.050	.0972	[illegible]	-.0508	-.0806	-.2443
.150	.0114	[illegible]	-.0800	-.0928	-.1070
.300	-.0618	-.1782	-.1186	-.1234	-.1730
.520	-.2048	-.2710	-.2712	-.3182	-.3768
.685	-.3940	-.6941	-1.1260	-.5968	-.9177
.775	-.2710	-.4522	-.6447	-.4984	-.3821
.900		-.3380	-.3852	-.3833	-.2297

MACH (1) = .898 ALPHAO(2) = -4.140

SECTION (1)LEFT VERTICAL DEPENDENT VARIABLE CP

Z/BV	.1580	.3180	.6000	.8400	.9250
X/CV					
.000	.4596	.4048	.4096	.4708	.4752
.025	-.2172	-.3442	-.3681	-.3778	-.4509
.050	.0183	-.0782	-.1025	-.1154	-.2742
.150	-.0780	-.0859	-.0970	-.1265	-.1307
.300	-.1295	-.1263	-.1467	-.1517	-.1970
.520	-.2511	-.2919	-.2959	-.3487	-.4011
.685	-.3708	-.6334	-1.0390	-.5337	-.6341
.775	-.2611	-.4182	-.5790	-.4509	-.2813
.900		-.3236	-.3034	-.3361	-.1858

PRECEDING PAGE BLANK NOT FILMED

ORIGINAL PAGE IS OF POOR QUALITY

LEFT VERTICAL

MACH (1) = .898 ALPHAO(3) = -.220

SECTION (1)LEFT VERTICAL DEPENDENT VARIABLE CP

Z/BV	.1580	.3160	.6000	.8400	.9250
X/CV					
.000	.4085	.3351	.4389	.4085	.4120
.025	-.2844	-.4151	-.3854	-.3951	-.4745
.050	-.0470	-.1469	-.1175	-.1485	-.2782
.150	-.1493	-.1362	-.1181	-.1528	-.1477
.300	.1855	-.1559	-.1606	-.1775	-.2137
.520	-.2709	-.2980	-.3133	-.3691	-.4072
.685	-.3259	-.5611	-.9254	-.5157	-.4890
.775	-.2547	-.3864	-.5249	-.4257	-.2611
.900		-.2975	-.2368	-.3018	-.1475

MACH (1) = .898 ALPHAO(4) = 5.830

SECTION (1)LEFT VERTICAL DEPENDENT VARIABLE CP

Z/BV	.1580	.3160	.6000	.8400	.9250
X/CV					
.000	.3656	.2597	.3791	.3415	.3487
.025	-.3590	-.4704	-.3681	-.3847	-.4640
.050	-.1119	-.1981	-.1194	-.1536	-.2930
.150	-.2048	-.1668	-.1272	-.1643	-.1761
.300	-.2308	-.1669	-.1718	-.1955	-.2282
.520	-.2739	-.2841	-.3259	-.3947	-.3990
.685	-.2798	-.5172	-.8238	-.5330	-.3638
.775	-.2322	-.3566	-.4724	-.3907	-.2304
.900		-.2625	-.2179	-.2340	-.1328

MACH (1) = .898 ALPHAO(5) = 8.030

SECTION (1)LEFT VERTICAL DEPENDENT VARIABLE CP

Z/BV	.1580	.3160	.6000	.8400	.9250
X/CV					
.000	.2308	.2130	.3418	.2937	.2942
.025	-.2541	-.3745	-.3883	-.3710	-.4406
.050	-.1406	-.1867	-.1382	-.1501	-.2940
.150	-.1745	-.1576	-.1313	-.1689	-.1817
.300	.1973	-.1694	-.1749	-.1970	-.2330
.520	-.2645	.2816	.3190	-.3893	.5933
.685	.2492	.4412	-.7156	-.5726	-.3045
.775	-.2166	.3021	-.4127	-.3177	[illegible]
.900		.2741	-.1379	.1610	[illegible]

ARC11-716 IA14 OI+T12+S12N25+AT11 LEFT VERTICAL (R01V17)

MACH (2) = .977 ALPHAO(1) = -7.920

SECTION (1)LEFT VERTICAL DEPENDENT VARIABLE CP

Z/BV	.1580	.3160	.6000	.8400	.9250
X/CV					
.000	.5754	.3273	.5972	.3746	.5751
.025	-.0301	-.2176	-.2456	-.2412	-.3149
.050	.1712	.0313	-.0897	-.0403	-.2681
.150	.0597	.0294	.0072	-.0078	-.0414
.300	-.0212	.0006	-.0369	-.0429	-.0138
.520	-.1132	-.1929	-.1931	-.1929	-.2850
.685	-.4543	-.8452	-.9325	-.9306	-.8926
.775	-.3559	-.5619	-.9035	-.8898	-.9169
.900		-.4541	-.5587	-.7613	-.7462

MACH (2) = .976 ALPHAO(2) = -3.880

SECTION (1)LEFT VERTICAL DEPENDENT VARIABLE CP

Z/BV	.1580	.3160	.6000	.8400	.9250
X/CV					
.000	.5242	.4297	.5095	.4794	.4867
.025	-.1018	-.3039	-.3028	-.2978	-.3846
.050	.1080	-.0744	-.1558	-.1337	-.3350
.150	-.0127	-.1060	-.0544	-.0602	-.1011
.300	-.1672	-.0639	-.0864	-.1134	-.0514
.520	-.1655	-.2231	-.2395	-.2515	-.3338
.685	-.4460	-.8017	-.9522	-.9854	-.9231
.775	-.3371	-.5702	-.9300	-.9462	-.9449
.900		-.4449	-.5141	-.5506	-.4857

MACH (2) = .977 ALPHAO(3) = .090

SECTION (1)LEFT VERTICAL DEPENDENT VARIABLE CP

Z/BV	.1580	.3160	.6000	.8400	.9250
X/CV					
.000	.4856	.3590	.4150	.3953	.4059
.025	-.1675	-.3535	-.3569	-.3429	-.4195
.050	.0628	-.1228	-.2646	-.2011	-.3619
.150	-.0851	-.1861	-.1091	-.0960	-.1522
.300	-.2276	-.1858	-.1296	-.1551	-.1063
.520	-.2491	-.2623	-.2782	-.2852	-.3699
.685	-.4567	-.7471	-.9603	-.9845	-.9455
.775	-.3245	-.5067	-.9370	-.9478	-.9261
.900		-.4451	-.4957	-.5208	-.4602

[illegible] LEFT VERTICAL (RB1V1)

MACH = .975 ALPHA(3) = 4.020

SECTION (1) LEFT VERTICAL DEPENDENT VARIABLE CP

Z/BV	.1580	.3160	.6000	.8400	.9250
X/CV					
.000	.4385	.2899	.3060	.2937	.3072
.025	-.2490	-.4220	-.4814	-.4158	-.4651
.050	-.0061	-.2074	-.4020	-.2912	-.4[illegible]53
.150	-.1306	-.2563	-.1930	-.1619	-.2207
.300	-.2874	-.2746	-.1966	-.2109	-.1581
.520	-.[illegible]373	-.3521	-.3593	-.3374	-.4197
.685	-.4457	-.6280	-.9960	-.9964	-.9433
.775	-.3080	-.4795	-.6744	-.7125	-.6093
.900		-.4253	-.4407	-.5452	-.3123

MACH (2) = .977 ALPHA(3) = 8.030

SECTION (1) LEFT VERTICAL DEPENDENT VARIABLE CP

Z/BV	.1580	.3160	.6000	.8400	.9250
X/CV					
.000	.3889	.2423	.2281	.2044	.2287
.025	-.2552	-.4461	-.5171	-.4700	-.4847
.050	-.0472	-.2478	-.4757	-.3562	-.4513
.150	-.1624	-.2884	-.2699	-.2107	-.2598
.300	-.3213	-.3315	-.2523	-.2528	-.2170
.520	-.3884	-.3714	-.3612	-.3639	-.4409
.685	-.4096	-.5263	-.9199	-.8155	-.8900
.775	-.2944	-.4859	-.5617	-.6021	-.4306
.900		-.3986	-.4054	-.4071	-.2706

MACH (3) = 1.102 ALPHA(3) = -7.940

SECTION (1) LEFT VERTICAL DEPENDENT VARIABLE CP

Z/BV	.1580	.3160	.6000	.8400	.9250
X/CV					
.000	.6922	.6166	.6759	.6635	.6708
.025	.1087	-.0828	-.1284	-.1188	-.1669
.050	.5034	.1183	-.0816	.0627	-.1299
.150	.1917	.0827	.1326	[illegible]	.0945
.300	.0467	.0683	.1058	[illegible]	.1508
.520	.0144	-.0155	-.0282	.19	-.1[illegible]55
.685	-.4430	-.7042	-.5760	-.7077	-.6[illegible]12
.775	-.3498	-.5899	-.5655	-.6792	-.5796
.900		.4243	-.5528	-.6841	-.5249

ARC11-715 (A14 [illegible]+T12+S12N25+AT11 LEFT VERTICAL [illegible]

MACH (3) = 1.101 ALPHAO(2) = 3.890

SECTION (1)LEFT VERTICAL DEPENDENT VARIABLE CP

Z/BV	.1580	.3160	.6000	.8400	.9250
X/CV					
.000	.6470	.5518	.5844	.5772	.5900
.025	.0566	-.1330	-.2092	-.1783	-.2187
.050	.2[illegible]	.0697	-.1632	-.0060	-.1727
.150	.1139	[illegible]	.0597	.0916	.0377
.300	-.0062	[illegible]	.0525	.0368	.0904
.520	-.0676	-.0662	-.0745	-.0678	-.1422
.685	-.4136	-.7134	-.6961	-.7184	-.6748
.775	-.3249	-.5229	-.6851	-.6947	-.7014
.900		-.4146	-.6705	-.7058	-.6595

MACH (3) = 1.103 ALPHAO(3) = .090

SECTION (1)LEFT VERTICAL DEPENDENT VARIABLE CP

Z/BV	.1580	.3160	.6000	.8400	.9250
X/CV					
.000	.6093	.4926	.5059	.4959	.5173
.025	-.0148	-.1747	-.2571	-.2242	-.2419
.050	.2121	.0178	-.2225	-.0944	-.2043
.150	.1024	-.0177	.0002	.0489	.0021
.300	-.0473	.0808	.0116	-.0033	.0601
.520	-.1148	-.1151	-.1124	-.1095	-.1771
.685	-.4102	-.7198	-.7102	-.7317	-.6959
.775	-.3134	-.4892	-.7019	-.7162	-.7186
.900		-.4008	-.6883	-.7275	-.6876

MACH (3) = 1.100 ALPHAO(4) = 4.080

SECTION (1)LEFT VERTICAL DEPENDENT VARIABLE CP

Z/BV	.1580	.3160	.6000	.8400	.9250
X/CV					
.000	.5593	.423[illegible]	.4132	.3853	.4126
.025	-.0683	-.2120	-.3142	-.3101	-.2783
.050	.1689	-.0389	-.2773	-.1823	-.2298
.150	.0504	-.0715	-.0794	-.0215	-.0529
.300	-.1026	-.1171	-.0644	-.0613	-.0185
.520	-.1771	-.1735	-.1672	-.1495	-.2156
.685	-.4314	-.7091	-.7343	-.7416	-.7229
.775	-.3191	-.4810	-.7267	-.7331	-.7422
.900		-.4011	-.6762	-.7418	-.7169

ORIGINAL PAGE IS
OF POOR QUALITY

[illegible] LEFT VERTICAL [illegible] REV12

[illegible] 099 [illegible]

SECTION [illegible] LEFT VERTICAL [illegible] DEPENDENT VARIABLE CP

Z/BV [illegible] .3160 .6000 [illegible]

X/CV

.000	.3608	.3861	.3310	.2912	.3211
.025	-.0980	-.2516	-.3504	-.3546	-.3581
.050	.1588	-.0945	-.3096	.2581	-.3229
.150	.0126	-.1199	-.1408	-.1790	-.1138
.300	-.1575	-.1824	-.1317	[illegible]	-.1824
.520	-.2561	-.2137	-.2181	.1966	-.2651
.685	-.4442	-.7089	-.7525	-.1579	-.7479
.775	-.5358	-.4893	-.7458	-.7556	-.7665
.900		-.4293	-.5183	-.7621	-.7458

MACH (4) = 1.248 ALPHA(1) = -7.940

SECTION (1) LEFT VERTICAL DEPENDENT VARIABLE CP

Z/BV .1580 .3160 .6000 .8400 .9250

X/CV

.000	.7650	.6777	.6996	.7018	.7220
.025	.1859	.0266	-.0838	-.1120	-.0838
.050	.3912	.1879	-.0594	.0488	-.0812
.150	.2897	.1736	.1539	.2095	.1783
.300	.1392	.1109	.1425	.1687	.2546
.520	.0469	.0463	.0573	.0878	.0259
.685	-.4218	-.5201	-.4813	-.4869	-.4811
.775	-.3198	-.5094	-.4728	-.4735	-.4817
.900		-.4034	-.4742	-.4868	-.4547

MACH (4) = 1.248 ALPHA(2) = -5.840

SECTION (1) LEFT VERTICAL DEPENDENT VARIABLE CP

Z/BV .1580 .3160 .6000 .8400 .9250

X/CV

.000	.7129	.6117	.6181	.6049	.6505
.025	.1212	-.0281	-.1313	-.1804	-.1271
.050	.3340	.1182	-.1082	-.0263	-.0982
.150	.2355	.1187	.0953	.1516	.1210
.300	.0868	.0538	.0860	.1186	.1947
.520	[illegible]	.0456	.0065	-.1593	.1575
.685	-.4137	-.5432	-.5043	-.5008	-.4994
.775	-.2968	-.5187	-.5019	-.4963	-.5166
.900		-.3855	-.5024	-.5132	-.4882

[illegible]

[illegible] DATA [illegible] LEFT [illegible]

MACH [illegible] = 1.244 ALPHA(5) = [illegible]

SECTION (1) LEFT VERTICAL DEPENDENT VARIABLE CP

Z/BV	.1580	.3180	.6000	.8400	.9250
X/CV					
.000	.6492	.5491	.5484	.5155	.5448
.025	.2428	-.0723	-.1715	.1948	-.1660
.050	.2457	.0187	-.1481	-.0892	-.1448
.150	.1516	.0759	.0451	.0994	.0700
.500	.4454	.3072	.377	.0626	.1229
.525	-.3472	-.4491	-.5406	.0039	-.0485
.675	-.4964	.5630	-.5205	-.5122	-.5011
.775	-.2906	-.4455	-.5224	-.5108	-.5189
.900		.5471	-.5221	-.5227	-.4958

MACH [illegible] = 1.249 ALPHA(4) = 4.010

SECTION (1) LEFT VERTICAL DEPENDENT VARIABLE CP

Z/BV	.1580	.3180	.6000	.8400	.9250
X/CV					
.000	.6087	.4676	.4580	.4212	.4485
.025	-.0171	-.1098	-.2060	-.2147	-.1935
.050	.2200	-.0310	-.1682	-.1585	-.1775
.150	.1278	.0175	-.0143	.0477	.0425
.500	-.0091	-.0497	-.0128	.0133	.0714
.525	-.0993	-.0845	-.0820	-.0287	-.0703
.675	-.3797	-.5745	-.5312	-.5188	-.5159
.775	-.2778	-.4411	-.5400	-.5110	-.5325
.900		-.5477	-.5352	-.5235	-.5185

MACH [illegible] 4) = 1.249 ALPHA(5) = 7.050

SECTION (1) LEFT VERTICAL DEPENDENT VARIABLE CP

Z/BV	.1580	.3180	.6000	.8400	.9250
X/CV					
.000	.5972	.4200	.3894	.3504	.4009
.025	-.0440	-.1455	-.2295	-.1984	-.1627
.050	.1704	-.0085	-.2457	-.1815	-.1785
.150	.0987	-.0244	-.0848	.0326	.0019
.500	-.0527	-.0947	-.0545	.0067	.0511
.525	-.1470	-.1284	-.1124	-.0447	-.1162
.675	-.3782	-.5795	-.5449	-.5167	-.5410
.775	.2833	-.4178	-.5535	-.5161	-.5595
.900		-.5494	-.5410	-.5272	-.5487

[illegible]

[illegible] LEFT VERTICAL [illegible] 02 [illegible]

[illegible] DATA

[illegible] = [illegible] XMIN = 29.9802 INCHES
[illegible] = [illegible] INCHES XMAP = .0000 INCHES
[illegible] = [illegible] INCHES ZMAP = .0000 INCHES
SCALE = .3000 SCALE

PARAMETERS [illegible]

ALPHA = .000 [illegible] = .000
BUDGET = .000 [illegible] = [illegible]

MACH (1) = .890 BETA (1) = -4.060

SECTION (1) LEFT VERTICAL DEPENDENT VARIABLE CP

Z/BV	.1580	.3160	.6000	.8400	.9250
X/CV					
.000	.2083	-.0075	-.0487	.0071	-.2722
.025	.4291	.3965	.3969	.3549	.3155
.050	.3850	.3515	.3429	.3136	.2602
.150	.2637	.2448	.2122	.1738	.0951
.300	.1595	.1304	.0907	.0374	-.0637
.525	-.0642	-.1447	-.1801	-.2800	-.3121
.645	-.3591	-.4954	-.6873	-1.0110	-.9461
.775	-.2409	-.2851	-.3773	-.6310	-.6134
.900		-.2407	-.2623	-.4733	-.3569

MACH (1) = .890 BETA (2) = -4.010

SECTION (1) LEFT VERTICAL DEPENDENT VARIABLE CP

Z/BV	.1580	.3160	.6000	.8400	.9250
X/CV					
.000	.3486	.2073	.2306	.2850	.2143
.025	.1618	.1549	.2259	.2218	.1704
.050	.1681	.1549	.1943	.1977	.1394
.150	.0755	.0890	.09[illegible]	.0731	-.0016
.300	.0002	-.0003	-.0119	-.0384	-.1333
.525	-.1445	-.2000	.2095	-.3087	-.3502
.645	.5213	-.5371	-.8833	-.8660	-.7536
.775	-.2240	-.3147	-.4269	-.6239	-.3794
.900		-.2575	-.2072	.2805	-.1714

ORIGINAL PAGE IS
OF POOR QUALITY

[illegible]

MACH [illegible] [illegible] BETA [illegible]

SECTION [illegible] LEFT VERTICAL [illegible] DEPENDENT VARIABLE CP

Z/BV	[illegible]	.3160	[illegible]	[illegible]	.9250
X/CV					
.000	[illegible]	.5258	.4341	.4145	.4112
.025	[illegible]	[illegible]	-.5545	-.5657	-.4581
.050	[illegible]	[illegible]	[illegible]	.1200	-.2739
.150	[illegible]	[illegible]	[illegible]	-.1414	-.1573
.300	[illegible]	[illegible]	-.1615	-.1771	.2095
.525	[illegible]	[illegible]	-.3111	-.3724	-.4105
.675	[illegible]	[illegible]	-.9481	-.5555	-.5307
.775	[illegible]	[illegible]	-.5509	-.4484	-.2661
.900		[illegible]	-.2454	-.3235	-.1672

MACH [illegible] = [illegible] BETA [illegible] = 4.100

SECTION [illegible] LEFT VERTICAL DEPENDENT VARIABLE CP

Z/BV	[illegible]	.3160	[illegible]	[illegible]	.9250
X/CV					
.000	.5517	.2554	.2552	.1436	.2096
.025	[illegible]	.8165	-.5329	.7501	.8589
.050	-.4541	.7966	-.5342	.7287	.8284
.150	-.2895	.5171	.8513	.6968	.8252
.300	-.4235	-.4668	[illegible]	-.6719	.6789
.525	.4180	-.3740	-.3555	-.5824	-.4537
.675	-.3116	-.4861	-.4520	-.4058	-.2571
.775	[illegible]	-.5663	-.4711	-.3282	-.2367
.900		-.2955	-.2466	-.2416	-.1740

MACH [illegible] = .050 BETA [illegible] = 8.130

SECTION [illegible] LEFT VERTICAL DEPENDENT VARIABLE CP

Z/BV	.1580	.3180	.6300	.8400	.9250
X/CV					
.000	.2166	.0132	-.0868	-.1738	-.0421
.025	.6192	-.9544	-1.1580	-.7538	-.6265
.050	-.8718	-.3554	-1.1055	-.7547	-.6274
.150	-.8227	-.9268	-1.1903	.7440	-.5890
.300	-.4182	-.8234	-1.[illegible]	.7024	-.5762
.525	[illegible]	[illegible]	[illegible]	.5961	.5195
.675	.5725	-.6148	-.7427	.5128	-.4537
.775	.2728	.4161	.6449	.4897	-.4254
.900		.2747	.4161	.4541	.5949

AR 1[illegible] [illegible] 14 [illegible] 12 [illegible] 12N25+AT11 LEFT VERTICAL (RB1V18)

MACH (2) = .978 BETAC (1) = -8.051

SECTION (1)LEFT VERTICAL DEPENDENT VARIABLE CP

Z/BV	.1580	.3160	.6000	.8400	.9250
X/CV					
.000	.3054	.1362	.0972	.1121	.2188
.025	.4423	.4108	.4166	.3825	.3528
.050	.4008	.3707	.3681	.3401	.2957
.150	.2804	.2703	.2442	.2513	.1303
.300	.1931	.1724	.1470	.0993	.0447
.520	.0196	-.0596	-.0785	-.1785	-.3177
.685	-.4042	-.6660	-.8545	-.8966	-.8946
.775	.5178	-.4648	-.7817	-.8419	-.8846
.900		-.3529	-.3731	-.8095	-.7439

MACH (2) = .978 BETAC (2) = -4.010

SECTION (1)LEFT VERTICAL DEPENDENT VARIABLE CP

Z/BV	.1580	.3160	.6000	.8400	.9250
X/CV					
.000	.4281	.3050	.5091	.3176	.2513
.025	.2110	.1191	.1793	.2093	.1784
.050	.2115	.1392	.1655	.1833	.1491
.150	.0756	.0814	.0819	.1011	.0235
.300	.0035	.0153	.0044	.0003	-.0158
.520	-.1149	-.1469	-.1751	-.2213	-.3805
.685	-.4598	.7922	-.9071	-.9361	-.9403
.775	.5244	-.4753	-.6837	-.9059	-.9495
.900		-.3567	-.5084	-.9050	-.7654

MACH (2) = .975 BETAC (3) = .040

SECTION (1)LEFT VERTICAL DEPENDENT VARIABLE CP

Z/BV	.1580	.3160	.6000	.8400	.9250
X/CV					
.000	.4807	.3993	.4238	.3944	.4031
.025	-.1528	-.3457	.3305	-.3036	-.3825
.050	.0655	-.1150	-.2000	-.1915	-.3556
.150	-.0441	-.1807	-.1022	-.0941	-.1412
.300	.2264	-.1750	-.1343	.1521	-.1111
.520	.2421	-.2556	-.2817	-.2868	-.3722
.685	.4499	-.7442	-.9729	-.9965	-.9493
.775	-.5188	-.5[illegible]	-.9417	-.9571	.4216
.900		-.3447	-.5007	-.9231	.4569

ORIGINAL PAGE IS
OF POOR QUALITY

ARC1:-716 TA14 C1+T12+S12N25+AT11 LEFT VERTICAL (RB1V19)

MACH (2) = .776 BETAO (4) = .070

SECTION (1)LEFT VERTICAL DEPENDENT VARIABLE CP

Z/BV	.1580	.3160	.6000	.8400	.9250
X/CV					
.000	.4285	.3306	.2981	.2082	.2485
.025	-.3596	-.6202	-.8161	-1.0330	-1.0050
.050	-.4183	-.6224	-.8513	-1.0710	-1.0480
.150	-.1854	-.3739	-.5938	-.6940	-.9340
.300	-.3141	-.5627	-.4472	-.4796	-.4908
.520	-.4220	-.4000	-.3561	-.4570	-.3867
.685	-.4966	-.6164	-.9305	-.9522	-.6771
.775	-.3009	-.5628	-.6184	-.6681	-.6065
.900		-.4519	-.4350	-.4968	-.3922

MACH (2) = .974 BETAO (5) = 8.120

SECTION (1)LEFT VERTICAL DEPENDENT VARIABLE CP

Z/BV	.1580	.3160	.6000	.8400	.9250
X/CV					
.000	.3012	.1506	.0812	-.0429	.0386
.025	-.4726	-.7839	-.9817	-1.0530	-1.0850
.050	-.5170	-.7913	-.9905	-1.0820	-1.1000
.150	-.6554	-.7360	-.9544	-.9541	-1.0790
.300	-.3017	-.6566	-.8678	-.6449	-.9849
.520	-.5263	-.5613	-.8497	-.6812	-.7755
.685	-.4313	-.6748	-.8419	-.5977	-.6791
.775	-.2997	-.5541	-.7650	-.4842	-.6242
.900		-.4128	-.6803	-.4400	-.4854

MACH (3) = 1.102 BETAO (1) = -8.090

SECTION (1)LEFT VERTICAL DEPENDENT VARIABLE CP

Z/BV	.1580	.3160	.6000	.8400	.9250
X/CV					
.000	.4118	.2803	.2381	.2801	.1808
.025	.5464	.4926	.4836	.4563	.4473
.050	.5015	.4496	.4394	.4215	.3943
.150	.3717	.3545	.3284	.3275	.2457
.300	.2744	.2818	.2328	.2206	.1891
.520	.1217	.0800	.0261	-.0188	-.1623
.685	-.4486	-.6400	-.8456	-.6712	-.6622
.775	-.3342	-.4990	-.8013	-.6211	-.6643
.900		-.3475	-.5100	-.8074	-.6364

[illegible] LEFT VERTICAL (RB1/15)

MACH (5) = 1.100 BETAO (2) = -4.010

SECTION (1)LEFT VERTICAL DEPENDENT VARIABLE CP

Z/BV	.1580	.3160	.6000	.8400	.9250
X/CV					
.000	.5481	.4148	.4385	.4309	.3855
.025	.3345	.2083	.2834	.3030	.2542
.050	.3350	.2241	.2740	.2794	.2573
.150	.2032	.1815	.1979	.2124	.1479
.300	.0966	.1362	.1244	.1293	.1204
.520	.0614	-.0294	-.0427	-.0590	-.1765
.685	-.4547	-.7041	-.6922	-.7064	-.7058
.775	-.3223	-.5502	-.6664	-.6840	-.7197
.900		-.3747	-.6288	-.6935	-.7063

MACH (3) = 1.102 BETAO (3) = .030

SECTION (1)LEFT VERTICAL DEPENDENT VARIABLE CP

Z/BV	.1580	.3160	.6000	.8400	.9250
X/CV					
.000	.6094	.4967	.5098	.5018	.5252
.025	.0005	-.1600	-.2284	-.1729	-.2043
.050	.2186	.0449	-.1604	-.0512	-.1553
.150	[illegible]	-.0150	.0159	.0637	.0091
.300	-.1420	-.0608	.0179	.0083	.0570
.520	-.1113	-.1311	-.1073	-.1015	-.1743
.685	-.4207	-.7246	-.7064	-.7258	-.6966
.775	-.3208	-.4950	-.6986	-.7071	-.7169
.900		-.4037	-.6850	-.7181	-.6862

MACH (3) = 1.100 BETAO (4) = 4.090

SECTION (1)LEFT VERTICAL DEPENDENT VARIABLE CP

Z/BV	.1580	.3160	.6000	.8400	.9250
X/CV					
.000	.5482	.4455	.4246	.3385	.3825
.025	-.1881	-.4188	-.6582	-.8304	-.8908
.050	-.2401	-.4160	-.7062	-.8510	-.8712
.150	-.0394	-.2201	-.3636	-.6968	-.7208
.300	-.1434	-.2121	-.2891	-.2545	-.3302
.520	-.2589	-.2479	-.2730	-.2488	-.2033
.685	-.4803	-.7398	-.7211	-.7596	-.6874
.775	-.3515	-.5289	-.7492	-.7444	-.7[illegible]
.900		-.4552	-.5468	-.7587	-.7139

ORIGINAL PAGE IS OF POOR QUALITY

ARC11-716 IA14 C4+T12+S12N25+AT11 LEFT VERTICAL (RB1V18)

MACH (3) = 1.100 BETAO (5) = 8.130

SECTION (1)LEFT VERTICAL DEPENDENT VARIABLE CP

Z/BV	.1580	.3160	.6000	.8400	.9250
X/CV					
.000	.4080	.2848	.2376	.1407	.2016
.025	-.3128	-.5522	-.7362	-.8471	-.9314
.050	-.3502	-.5682	-.7451	-.9036	-.9702
.150	-.5151	-.5239	-.7185	-.7348	-.8837
.300	-.1344	-.4714	-.6308	-.6555	-.6884
.520	-.3410	-.4197	-.6183	-.6373	-.4887
.685	-.5433	-.6526	-.8193	-.6835	-.6473
.775	-.3018	-.5734	-.6709	-.5[illegible]43	-.4959
.900		-.5244	-.5621	-.4857	-.4453

MACH (4) = 1.252 BETAO (1) = -8.080

SECTION (1)LEFT VERTICAL DEPENDENT VARIABLE CP

Z/BV	.1580	.3160	.6000	.8400	.9250
X/CV					
.000	.5021	.3478	.3570	.3537	.2897
.025	.6126	.5251	.5481	.5286	.5280
.050	.5688	.4826	.5072	.4996	.4782
.150	.4157	.3992	.4103	.4118	.3498
.300	.3101	.3301	.3202	.3216	.2973
.520	.2217	.1781	.1368	.1125	.0089
.685	-.3527	-.4444	-.4435	-.4587	-.4715
.775	-.2920	-.4177	-.4125	-.4419	-.4784
.900		-.3126	-.3741	-.4445	-.4604

MACH (4) = 1.244 BETAO (2) = -4.030

SECTION (1)LEFT VERTICAL DEPENDENT VARIABLE CP

Z/BV	.1580	.3160	.6000	.8400	.9250
X/CV					
.000	.6003	.4777	.5079	.5129	.4864
.025	.4235	.3059	.3218	.3557	.3556
.050	.4214	.3059	.3258	.3456	.3361
.150	.2994	.2125	.2631	.2951	.2445
.300	.1496	.1783	.2091	.2260	.2321
.520	.0910	.0724	.0749	.0805	-.0084
.685	-.4176	-.5079	-.4904	-.4914	-.4980
.775	-.2637	-.4899	-.4778	-.4704	-.5080
.900		-.3139	-.4568	-.4809	-.5013

AS 11-716 214 06+T12+12N25+ATM LEFT VERTICAL (RB1 V18)

MACH ( ) = 1.249 BETAO (3) = 0.30

SECTION (1)LEFT VERTICAL DEPENDENT VARIABLE CP

X/CV \ Z/BV	.1580	.3160	.6000	.8400	.9250
.000	.6541	.5589	.5527	.5241	.5535
.025	.0594	-.0487	-.1406	-.1541	-.1301
.050	.2680	.0710	-.1136	-.0613	-.1062
.150	.1947	.0843	.0603	.1168	.0934
.300	.0579	.0194	.0537	.0795	.1355
.520	-.0358	-.0363	-.0287	.0152	-.0467
.685	-.4186	-.5503	-.5113	-.5055	-.5018
.775	-.2810	-.5044	-.5129	-.5034	-.5242
.900		-.3512	-.5113	-.5174	-.5090

MACH (4) = 1.248 BETAO (4) = 4.090

SECTION (1)LEFT VERTICAL DEPENDENT VARIABLE CP

X/CV \ Z/BV	.1580	.3160	.6000	.8400	.9250
.000	.6093	.5027	.4872	.4379	.4825
.025	-.1074	-.2928	-.5780	-.5901	-.6364
.050	-.1565	-.2920	-.5700	-.5990	-.6219
.150	.0242	-.1497	-.2212	-.4762	-.4920
.300	-.0334	-.1042	-.1171	-.1520	-.2401
.520	-.1465	-.1571	-.1384	-.1081	-.0561
.685	-.4105	-.6022	-.5315	-.5309	-.4723
.775	-.3015	-.4641	-.5497	-.5230	-.5082
.900		-.3475	-.5534	-.5209	-.5029

MACH (4) = 1.248 BETAO (5) = 8.150

SECTION (1)LEFT VERTICAL DEPENDENT VARIABLE CP

X/CV \ Z/BV	.1580	.3160	.6000	.8400	.9250
.000	.4987	.3801	.3571	.2595	.3182
.025	-.2574	-.3862	-.5409	-.6411	-.6897
.050	-.2795	-.3744	-.5505	-.6876	-.7217
.150	-.4095	-.3541	-.5050	-.5931	-.6488
.300	-.0008	-.3427	-.4451	-.4844	-.5714
.520	-.1872	-.3187	-.4321	-.4343	-.5938
.685	.4240	-.5955	-.6411	-.6758	-.6278
.775	-.3150	-.4821	-.6353	-.5850	-.6350
.900		-.4430	-.4965	-.4469	-.4789

ARC11-716 IA14 O1+T12+S12N25+AT10 LEFT VERTICAL (RB1V24) (27 SEP 75)

REFERENCE DATA

SREF = 2.4210 SQ.FT. XMRP = 29.5800 INCHES
LREF = 38.7090 INCHES YMRP = .0000 INCHES
BREF = 38.7090 INCHES ZMRP = .0000 INCHES
SCALE = .0300 SCALE

PARAMETRIC DATA

ALPHAO = -10.000 ELEVON = .000
RUDDER = .000 SPDBRK = .000

MACH (1) = .902 BETAO (1) = -9.890

SECTION (1)LEFT VERTICAL DEPENDENT VARIABLE CP

Z/BV	.1580	.3160	.6000	.8400	.9250
X/CV					
.000	.1654	.0258	.0891	.1943	.0868
.025	.6295	.5946	.5813	.5314	.4931
.050	.5692	.5362	.5217	.4840	.4313
.150	.4405	.4063	.3699	.3232	.2292
.300	.3110	.2593	.2174	.1624	.0864
.520	.0433	-.0642	-.0612	-.1889	-.1951
.685	-.3304	-.5915	-.9427	-1.0300	-1.0260
.775	-.3409	-.3641	-.4372	-.9593	-.9391
.900		-.2673	-.3455	-.5775	-.5617

MACH (1) = .899 BETAO (2) = 10.090

SECTION (1)LEFT VERTICAL DEPENDENT VARIABLE CP

Z/BV	.1580	.3160	.6000	.8400	.9250
X/CV					
.000	.1559	-.0169	.0205	-.0545	.0943
.025	-.6778	-.9905	-1.1360	-.7213	-.6140
.050	-.7242	-.9922	-1.1180	-.7188	-.6233
.150	-.9475	-1.0060	-1.1350	-.7237	-.6381
.300	-.3043	-.5095	-1.0670	-.6963	-.6098
.520	-.5552	-.7300	-.9304	-.6175	-.5512
.685	-.4661	-.6109	-.7874	-.5154	-.4549
.775	-.3568	-.5347	-.7700	-.4938	-.4320
.900		-.3601	-.6468	-.4686	-.4236

[illegible] PROGRAM [illegible] VOL 7 GE 3313

ARC [illegible] A [illegible]2+512N25+A[illegible] LEFT VERTICAL FB1V25 21 SEP 73

REFERENCE DATA

SREF = [illegible] SQ FT. XMRP = 21.3800 INCHES
CF = [illegible] INCHES YMRP = [illegible] INCHES
BREF = 38.7090 INCHES ZMRP = [illegible] INCHES
SCALE = .0300 SCALE

PARAMETRIC DATA

ALPHAC = -8.000 ELEVON = .000
RUDDER = [illegible] SPOILER = .000

MACH 1) = .899 BETAO 1) = -9.930

SECTION (1)LEFT VERTICAL DEPENDENT VARIABLE CP

Z/BV	.1580	.3180	.6000	.8400	.9250
X/CV					
.000	.1093	-.0047	.0148	.1320	.0370
.025	.6019	.5647	.5537	.5097	.4671
.050	.5342	.5043	.4953	.4820	.4074
.150	.4183	.3781	.3511	.3055	.2083
.300	.2862	.2360	.2002	.1455	.0166
.520	.0235	-.0773	-.0729	-.2049	-.2184
.685	-.3245	-.5834	-.8705	-1.0440	-1.0330
.775	-.3170	-.5083	-.4114	-.8971	-.9507
.900		-.2593	-.5431	-.5499	-.4333

MACH 1) = .899 BETAO 2) = 10.090

SECTION (1)LEFT VERTICAL DEPENDENT VARIABLE CP

Z/BV	.1580	.3180	.6000	.8400	.9250
X/CV					
.000	.1561	-.0487	-.0298	-.1117	.0392
.025	-.7009	-1.0020	-1.1260	-.7231	-.6202
.050	-.7429	-1.0100	-1.1050	-.7157	-.6083
.150	-.9662	-1.0180	-1.1360	-.6996	-.6171
.300	-.3331	-.9376	-1.0800	-.6851	-.5925
.520	-.5720	-.7395	-.9463	-.6105	-.5449
.685	-.4192	-.7853	-.8137	-.5190	-.4548
.775	-.3386	-.4767	-.7774	-.5059	-.4305
.900		-.3204	-.6478	-.4802	-.4231

ARC11-716 TA14 OL+T12+S12N25+AT10 LEFT VERTICAL (RB1V28) (27 SEP 73)

REFERENCE DATA

SREF = 2.4210 SQ.FT. XMRP = 29.5800 INCHES
LREF = 58.7090 INCHES YMRP = .0000 INCHES
BREF = 58.7090 INCHES ZMRP = .0000 INCHES
SCALE = .0300 SCALE

PARAMETRIC DATA

ALPHAO = -6.000 ELEVON = .000
RUDDER = .000 SPDBRK = .000

MACH (1) = .897 BETAO (1) = -9.840

SECTION (1)LEFT VERTICAL DEPENDENT VARIABLE CP

Z/BV	.1580	.3160	.6000	.8400	.9250
X/CV					
.000	.0668	-.0473	-.0354	.0729	-.0253
.025	.5731	.5393	.5238	.4771	.4368
.050	.5176	.4847	.4663	.4312	.3747
.150	.3905	.3569	.3243	.2794	.1797
.300	.2676	.2230	.1800	.1241	.0103
.520	.0055	-.0916	-.0845	-.2210	-.2407
.685	-.5205	-.5180	-.7433	-1.0390	-1.0430
.775	-.2948	-.2550	-.3808	-.7628	-.8896
.900		-.2500	-.3418	-.5179	-.4139

MACH (1) = .898 BETAO (2) = 10.070

SECTION (1)LEFT VERTICAL DEPENDENT VARIABLE CP

Z/BV	.1580	.3160	.6000	.8400	.9250
X/CV					
.000	.1080	-.0732	-.0787	-.1685	-.0037
.025	-.6930	-1.0210	-1.1220	-.7195	-.5956
.050	-.7315	-1.0200	-1.1300	-.6962	-.6019
.150	-.9718	-1.0300	-1.1260	-.6928	-.6281
.300	-.5662	-.9494	-1.0740	-.6852	.6001
.520	-.5794	-.7289	-.9672	-.6095	-.5460
.685	-.5930	-.7279	-.8443	-.5154	-.4594
.775	-.5273	-.4459	-.7970	-.4988	-.4380
.900		-.3022	-.6315	-.4639	-.4274

[illegible] PAGE [illegible]

[illegible] (RB1/2A) 27 SEP [illegible]

[illegible] PARAMETRIC DATA

[illegible] ALPHA = [illegible] [illegible]VOL = [illegible]
[illegible]CODE = [illegible] [illegible]BRK = [illegible]

[illegible]

[illegible]

MA[illegible] = [illegible] RE[illegible] = [illegible]

SE[illegible] 1 [illegible] VERTICAL DEPENDENT VA[illegible] AB[illegible]

[illegible]	[illegible]	.3160	.6000	.9400	[illegible]
[illegible]					
.300	[illegible]	-.0823	-.0707	[illegible]	-.0801
.025	.5556	.5081	.4968	.4512	.4136
[illegible]	.4931	.4608	.4398	.4087	.3497
.15	.3744	.3385	.3047	.2656	.1644
[illegible]	.2485	.2013	.1688	.1147	.0118
[illegible]	[illegible]	-.0446	-.1[illegible]	-.0282	-.2590
[illegible]	-.2153	[illegible]	[illegible]	[illegible]	[illegible]
.75	-.3[illegible]	[illegible]	-.361[illegible]	.6706	-.7[illegible]47
.900		.2[illegible]5	-.5254	.5[illegible]73	-.4368

ARC11-71@ IA14 O1+T12+S12N25+AT1C LEFT VERTICAL (RB1V28) (27 SEP 73)

REFERENCE DATA

BREF = 2.4210 SQ.FT. XMRP = 29.5800 INCHES
LREF = 38.7090 INCHES YMRP = .0000 INCHES
BREF = 38.7090 INCHES ZMRP = .0000 INCHES
SCALE = .0500 SCALE

PARAMETRIC DATA

ALPHAO = .000 ELEVON = .000
RUDDER = .000 SPDBRK = .000

MACH (1) = 1.246 BETAO (1) = -10.080

SECTION (1)LEFT VERTICAL DEPENDENT VARIABLE CP

Z/BV	.1580	.3160	.6000	.8400	.9250
X/CV					
.000	.4020	.2608	.2510	.2691	.1878
.025	.6791	.6133	.6241	.5949	.4511
.050	.6292	.5687	.5856	.5610	.5448
.150	.4927	.4842	.4765	.4748	.4023
.300	.3908	.4054	.3493	.3706	.3610
.520	.2713	.2154	.1781	.1439	.0177
.685	-.5508	-.4177	-.4258	-.4294	-.4657
.775	-.2337	-.3712	-.3792	-.4047	-.4522
.900		-.2531	-.3311	-.3934	-.4356

MACH (1) = 1.245 BETAO (2) = -7.360

SECTION (1)LEFT VERTICAL DEPENDENT VARIABLE CP

Z/BV	.1580	.3160	.6000	.8400	.9250
X/CV					
.000	.4613	.3540	.3612	.3758	.3017
.025	.6212	.5375	.5546	.5385	.3906
.050	.5717	.4938	.5115	.5017	.4960
.150	.4238	.4073	.4138	.4152	.3563
.300	.3218	.3492	.2966	.3271	.3130
.520	.2262	.1808	.1411	.1175	-.0097
.685	-.3478	-.4489	-.4448	-.4574	-.4858
.775	-.2415	-.4129	-.4130	-.4375	-.4788
.900		-.2731	-.3729	-.4363	-.4593

(RB:V29

MACH = 1.248 BETA = [illegible]

SECTION (1) LEFT VERTICAL DEPENDENT VARIABLE CP

Z/BV	.1580	.3160	.6000	.8400	.9250
X/CV					
.000	.9215	.4369	.4518	.4830	.4484
.025	.3475	.4516	.4845	.4690	.5322
.050	.5131	.4060	.4366	.4396	.4461
.150	.3716	.3425	.3467	.3636	.3126
.300	.2428	.2872	.2509	.2876	.2929
.525	.1760	.1469	.1114	.1326	-.0151
.685	-.3745	.4767	-.4611	-.4799	.4975
.775	.2548	-.4447	-.4405	-.4492	.5011
.900		-.3455	-.4115	-.4584	-.4918

MACH (1) = 1.247 BETA (4) = -3.950

SECTION (1) LEFT VERTICAL DEPENDENT VARIABLE CP

Z/BV	.1580	.3160	.6000	.8400	.9250
X/CV					
.000	.5551	.4831	.5098	.5145	.4897
.025	.4306	.3148	.3275	.3504	.2189
.050	.4255	.3130	.3286	.3451	.3722
.150	.3038	.2240	.2677	.2919	.2524
.300	.1537	.1347	.1915	.2239	.2411
.525	.0976	.0948	.0769	.0753	-.0317
.685	-.4055	-.5008	-.4832	-.5071	-.5108
.775	-.2461	-.4824	-.4667	-.4865	-.5181
.900		-.3365	-.4448	-.5011	-.5139

MACH (1) = 1.248 BETA (5) = -2.040

SECTION (1) LEFT VERTICAL DEPENDENT VARIABLE CP

Z/BV	.1580	.3160	.6000	.8400	.9250
X/CV					
.000	.5959	.5392	.5488	.5339	.5378
.025	.2456	.1549	.1280	.2052	.0790
.050	.3555	.2340	.1826	.2310	.2205
.150	.2474	.1587	.1708	.2075	.1786
.300	.1172	.1102	.0988	.1593	.2415
.525	.0206	.0247	.0215	.0587	[illegible]
.685	-.3653	-.5537	-.4906	-.5069	-.5[illegible]4
.775	-.2367	-.4779	-.4926	-.4938	-.5332
.900		-.3115	-.4882	-.5103	-.5231

ARC11-716 IA14 C4+T12+S12N25+AT1U LEFT VERTICAL (RB1V28)

MACH (1) = 1.246 BETAO (3) = .010

SECTION (1)LEFT VERTICAL DEPENDENT VARIABLE CP

Z/BV	.1500	.3180	.6000	.8400	.9250
X/CV					
.000	.3969	.5828	.5611	.5359	.5597
.025	.0693	-.0496	-.1418	-.1518	-.1776
.050	.2771	.0727	-.1108	-.0499	-.0177
.150	1477	.0842	.0642	.1146	.0919
.300	.0581	.0328	.0043	.0852	.1734
.520	-.5417	-.2297	-.0268	.0196	-.0447
.685	-.3787	-.5591	-.5144	-.5011	-.5135
.775	-.2667	-.4654	-.5154	-.4992	-.5262
.900		-.3284	-.5165	-.5133	-.5062

[illegible] LEFT VERTICAL (R81V20) (27 SEP 78)

REFERENCE DATA

SREF =	[illegible] SQ FT	XMRP =	[illegible] INCHES
CREF =	[illegible] INCHES	YMRP =	[illegible] INCHES
B REF =	[illegible] INCHES	ZMRP =	[illegible] INCHES
SCALE =	[illegible] SCALE		

PARAMETRIC DATA

A PHAD =	-10.000	ELEVON =	.000
RUDDER =	.000	[illegible] =	.000

MACH NO = [illegible] 245 BETAO NO = .03[illegible]

SECTION [illegible] LEFT VERTICAL DEPENDENT VARIABLE CP

Z/[illegible]	[illegible]500	.3180	.6000	.8400	.9250
X/CV					
.000	7268	7200	.7545	.7572	7729
.025	8245	.0554	-.0440	-.0661	-.1090
[illegible]	4236	.2204	-.0133	.0877	.0079
[illegible]	3199	.2025	.1973	.2334	.2096
[illegible]	.1719	.1609	.0858	.1915	2952
[illegible]	.0878	.0812	.0922	1112	.0473
[illegible]	-.5937	-.5146	-.4729	4911	.4589
[illegible]	-.2969	-.4478	-.4673	4685	-.4761
[illegible]		-.3790	-.4626	477[illegible]	4421

ARC11-718 IA14 OI+T12+S12MES+AT11 LEFT VERTICAL (RB1V30) (02 OCT 73)

REFERENCE DATA

SREF = 8.4210 SQ.FT. XMRP = 29.5800 INCHES
LREF = 36.7090 INCHES YMRP = .0000 INCHES
BREF = 36.7090 INCHES ZMRP = .0000 INCHES
SCALE = .0300 SCALE

PARAMETRIC DATA

ALPHAO = .000 ELEVON = .000
RUDDER = .000 SPOBRK = .000

MACH (1) = .972 BETAO (1) = .040

SECTION (1)LEFT VERTICAL DEPENDENT VARIABLE CP

Z/BV	.1580	.3160	.6000	.8400	.9250
X/CV					
.000	.4302	.5543	.4284	.3878	.4050
.025	-.1668	-.5427	-.3630	-.3506	-.4752
.050	.0527	-.1192	-.1942	-.1913	-.2882
.150	-.0678	-.1882	-.1081	-.1232	-.1458
.300	-.2332	.1917	-.1298	-.1581	-.1051
.520	-.2502	-.2618	-.2823	-.2917	-.3791
.675	-.4572	-.7520	-.9712	-1.0090	-.9924
.775	-.3223	-.5074	-.9442	-.9688	-.3707
.900		-.4422	-.5184	-.5099	-.4585

MACH (2) = 1.002 BETAO (1) = .040

SECTION (1)LEFT VERTICAL DEPENDENT VARIABLE CP

Z/BV	.1580	.3160	.6000	.8400	.9250
X/CV					
.000	.4755	.6089	.4732	.4251	.4438
.025	-.1184	-.5051	-.3018	-.2790	-.4127
.050	.1042	-.0834	-.1511	-.1308	-.2238
.150	-.0122	-.1286	-.0546	-.0892	-.0950
.300	-.1705	-.1235	-.0764	-.1053	-.0558
.520	-.1854	-.2105	-.2308	-.2339	-.3203
.675	-.4468	-.7578	-.9012	-.9243	-.9172
.775	-.3444	-.5503	-.8797	-.6733	-.9099
.900		-.4440	-.5735	-.7613	-.6342

[illegible] EFF VERTICAL [illegible]

[illegible] BETA [illegible]

[illegible]	[illegible]	[illegible]	[illegible]	[illegible]	[illegible]
[illegible]	4946	4315	[illegible]	4579	4832
025	[illegible]	[illegible]	2799	-.2425	[illegible]
[illegible]	.1541	[illegible]	-.1465	[illegible]	[illegible]
[illegible]	.0217	[illegible]	[illegible]	[illegible]	[illegible]
[illegible]	[illegible]	1073	[illegible]	[illegible]	[illegible]
[illegible]	[illegible]	-.1746	-.1315	-.1915	2779
645	-.4527	-.7835	-.8562	.8732	.8678
775	5308	-.5562	-.8287	[illegible]	-.8618
[illegible]		[illegible]	-.6524	[illegible]	[illegible]

UNCLAS

ARC11-716 IA14 O1+T12+S12N25+AT10 LEFT VERTICAL (RB1V31) (06 FEB 74)

C-2

REFERENCE DATA

SREF = 2.4210 SQ.FT. XMRP = 29.5800 INCHES
LREF = 38.7090 INCHES YMRP = .0000 INCHES
BREF = 38.7090 INCHES ZMRP = .0000 INCHES
SCALE = .0300 SCALE

PARAMETRIC DATA

MACH = .900 ELEVON = .000
RUDDER = .000 SPDBRK = .000

ALPHAO(1) = -10.140 BETAO (1) = -8.370

SECTION (1)LEFT VERTICAL DEPENDENT VARIABLE CP

Z/BV	.1580	.3160	.6000	.8400	.9250
X/CV					
.000	.2919	.11[illegible]	.1635	.2428	.1280
.025	.5658	.5377	.5175	.4539	.3918
.050	.5195	.4798	.4575	.4089	.3592
.150	.3838	.3523	.3142	.2479	.1871
.300	.2591	.2130	.1671	.0909	.0177
.520	.0055	-.0811	-.0908	-.2432	-.2326
.685	-.3499	-.5201	-.9849	.0000	.0000
.775	-.2705	-.3850	-.5202	-1.0250	-.9601
.900		-.2706	-.3500	-.7126	-.6867

ALPHAO(1) = -10.130 BETAO (2) = -6.560

SECTION (1)LEFT VERTICAL DEPENDENT VARIABLE CP

Z/BV	.1580	.3160	.6000	.8400	.9250
X/CV					
.000	.3764	.2375	.2784	.3432	.2413
.025	.4836	.4489	.4537	.3884	.3254
.050	.4517	.4082	.3995	.3465	.2841
.150	.3241	.2905	.2596	.1993	.1506
.300	.2027	.1647	.1238	.0551	-.0126
.520	-.0315	-.1111	-.1165	-.2672	-.2549
.685	-.3485	-.6430	-1.0280	.0000	.0000
.775	-.2493	-.3505	-.5706	.0000	-.9718
.900		-.2500	-.3078	-.6705	-.4332

ARCL [illegible] +T12+S12N25+AT10 LEFT VERTICAL (RB1V35)

ALPHAC (1) = -10.130 BETAC (5) = 6.840

SECTION (1)LEFT VERTICAL DEPENDENT VARIABLE CP

Z/BV	.1580	.3160	.6000	.8400	.9250
X/CV					
.000	.4516	.3495	.3926	.4501	.3547
.025	.3865	.3552	.3914	.3152	.2390
.050	.3675	.3300	.3157	.2852	.2256
.150	.2565	.2278	.2001	.1518	.0987
.300	.1493	.1205	.0759	.0235	-.0455
.520	-.0708	-.1341	-.1483	-.2695	-.2771
.685	-.3521	-.6678	.0000	.0000	-.7579
.775	-.2492	-.3910	-.6928	-.7775	-.5956
.900		-.2724	-.3467	-.5397	-.3291

ALPHAC (1) = -10.080 BETAC (4) = -3.250

SECTION (1)LEFT VERTICAL DEPENDENT VARIABLE CP

Z/BV	.1580	.3160	.6000	.9400	.9250
X/CV					
.000	.5025	.4299	.5063	.5217	.4422
.025	.2778	.2232	.2342	.2012	.1027
.050	.2948	.2367	.2312	.1887	.1287
.150	.1936	.1634	.1396	.0822	.0467
.300	.0914	.0653	.0300	-.0286	-.0760
.520	-.1094	-.1743	-.1639	-.2897	-.3273
.685	-.3582	-.7104	.0000	-.8037	-.9367
.775	-.2661	-.4088	-.9445	-.7022	-.6663
.900		-.2836	-.3611	-.5577	-.2629

ALPHAC (1) = -10.040 BETAC (5) = -1.800

SECTION (1)LEFT VERTICAL DEPENDENT VARIABLE CP

Z/BV	.1580	.3160	.6000	.8400	.9250
X/CV					
.000	.5458	.5033	.5807	.5900	.5504
.025	.1078	.0305	.0329	.0251	-.0896
.050	.2203	.1610	.0998	.0737	-.0082
.150	.1289	.0911	.0629	.0261	-.0056
.300	.0365	.0096	-.0251	-.0505	-.1032
.520	-.1478	-.2179	-.1984	-.2786	-.3588
.685	-.3802	-.7261	-1.1140	-.7936	-.9849
.775	-.2869	-.4547	-.9047	-.6514	-.7301
.900		-.3144	-.4253	-.5016	-.2741

ARC11-716 IA14 OL+T12+S12N25+AT10 LEFT VERTICAL (RB1V31)

ALPHAO(1) = -10.040 BETAO (8) = .100

SECTION (1)LEFT VERTICAL DEPENDENT VARIABLE CP

Z/BV	.1580	.3160	.6000	.8400	.9250
X/CV					
.000	.5616	.5353	.6057	.5809	.5758
.025	-.0969	-.2484	-.3256	-.3806	-.4321
.050	.1334	.0314	-.0486	-.0822	-.2888
.150	.0520	.0043	-.0398	-.0817	-.0929
.300	-.0293	-.0560	-.0975	-.1131	-.1551
.520	-.1930	-.2630	-.2428	-.3124	-.3654
.685	-.4164	-.7391	-1.1300	-.6360	-.9904
.775	-.2988	-.4852	-.8890	-.5403	-.4855
.900		-.3504	-.4546	-.4113	-.2313

ALPHAO(1) = -10.040 BETAO (7) = 1.810

SECTION (1)LEFT VERTICAL DEPENDENT VARIABLE CP

Z/BV	.1580	.3160	.6000	.8400	.9250
X/CV					
.000	.5470	.5019	.5572	.5183	.5359
.025	-.2838	-.4914	-.8048	-.8108	-.6638
.050	-.0460	-.3838	-.5580	-.6357	-.6498
.150	-.0355	-.0909	-.1607	-.2348	-.2636
.300	-.1096	-.1251	-.1932	-.1970	-.2068
.520	-.2325	-.2992	-.3131	-.3385	-.3553
.685	-.4416	-.7591	-1.1450	-.5781	-.7900
.775	-.3053	-.5083	-.6108	-.4630	-.3700
.900		-.4016	-.4363	-.3663	-.2614

ALPHAO(1) = -10.130 BETAO (8) = 3.560

SECTION (1)LEFT VERTICAL DEPENDENT VARIABLE CP

Z/BV	.1580	.3160	.6000	.8400	.9250
X/CV					
.000	.5178	.4285	.4861	.3967	.4449
.025	-.3338	-.7183	-.7082	-.9170	-.9650
.050	-.3665	-.6110	-.7190	-.9262	-.9432
.150	-.1150	-.3174	-.5098	-.6541	-.7328
.300	-.2292	-.2206	-.3421	-.4412	-.4438
.520	-.2787	-.3456	-.4237	-.4302	-.3794
.685	-.4850	-.7276	-1.0600	-.6506	-.6350
.775	-.3224	-.5321	-.5409	-.4275	-.3269
.900		-.4087	-.3296	-.3024	-.2538

[illegible] LEFT VERTICAL (RB1V31)

ALPHAO([illegible]) = -10.130 BETAO (8) = 5.257

SECTION [illegible] LEFT VERTICAL DEPENDENT VARIABLE CP

Z/BV	.1580	.3160	.6000	.8400	.9250
X/CV					
.000	.4626	.5421	.3547	.2747	[illegible]
.025	-.4131	-.7792	-.9186	1.0280	-1.2000
.050	-.4614	-.7408	-.9372	-1.0800	-1.1870
.150	-.2283	-.5907	-.8326	-.8952	.5611
.300	-.2991	-.4194	-.6837	-.7592	-.7065
.520	-.4108	-.4171	-.5929	.5425	-.4255
.685	-.5097	-.6512	-.8820	-.4125	-.5307
.775	-.2861	-.5569	-.5093	-.3515	-.2926
.900		-.3954	-.3547	-.2998	-.2502

ALPHAO(1) = -10.120 BETAO (10) = 7.010

SECTION (1)LEFT VERTICAL DEPENDENT VARIABLE CP

Z/BV	.1580	.3160	.6000	.8400	.9250
X/CV					
.000	.3880	.2285	.2447	.1494	.2546
.025	-.4851	-.8562	-1.0480	-.8703	-.7098
.050	-.5351	-.8108	-1.0880	-.8897	-.6951
.150	-.5256	-.7305	-.9927	-.8380	-.7090
.300	-.3064	-.6187	-.8672	-.7583	-.6907
.520	-.4650	-.5156	-.6336	-.6239	-.5248
.685	-.5055	-.6848	-.6545	-.5369	-.4316
.775	-.2860	-.5036	-.5861	-.4711	-.4017
.900		-.3640	-.4832	-.4200	-.3648

ALPHAO(1) = -10.130 BETAO (11) = 8.780

SECTION (1)LEFT VERTICAL DEPENDENT VARIABLE CP

Z/BV	.1580	.3160	.6000	.8400	.9250
X/CV					
.000	.2947	.0563	.1287	.0454	.1655
.025	-.8113	-.9257	-1.1080	-.8556	-.6971
.050	-.6478	-.9147	-1.1250	-.8380	-.6766
.150	-.8053	-.8772	-1.0800	-.8319	-.7050
.300	-.2953	-.7668	-.9975	-.7560	-.6828
.520	-.5294	-.6161	-.8419	-.6327	-.5981
.685	-.4985	-.7531	-.7010	-.5398	-.4665
.775	-.2939	-.5405	-.6550	-.4937	-.4264
.900		-.3920	-.5435	-.4442	-.3980

ARC11-716 TA14 OL+T12+S12N25+AT10 LEFT VERTICAL (RB1V31)

ALPHAO(2) = -8.110 BETAO (1) = -8.350

SECTION (1)LEFT VERTICAL DEPENDENT VARIABLE CP

Z/BV	.1580	.3160	.6000	.8400	.9250
X/CV					
.000	.2727	.0943	.1246	.2181	.1156
.025	.5400	.5114	.5011	.4567	.4283
.050	.4958	.4567	.4413	.4158	.3737
.150	.3654	.3321	.2991	.2565	.1687
.300	.2399	.1947	.1538	.1118	-.0102
.520	-.0071	-.0987	-.0975	.2242	-.2868
.685	-.3274	-.5962	-.9559	-1.0600	-1.0590
.775	-.2550	-.3211	-.4440	-.9706	-.9764
.900		-.2492	-.3140	-.5709	-.4145

ALPHAO(2) = -8.120 BETAO (2) = -6.640

SECTION (1)LEFT VERTICAL DEPENDENT VARIABLE CP

Z/BV	.1580	.3160	.6000	.8400	.9250
X/CV					
.000	.3528	.2086	.2382	.3177	.2231
.025	.4579	.4358	.4370	.3971	.3350
.050	.4190	.3884	.3817	.3567	.3267
.150	.2970	.2705	.2439	.2010	.1311
.300	.1847	.1468	.1076	.0700	-.0497
.520	-.0497	-.1247	-.1250	-.2513	-.3333
.685	-.3387	-.5958	-1.0240	-1.1100	-1.086[illegible]
.775	-.2468	-.3350	-.5047	-1.0160	-1.0220
.900		-.2555	-.2749	-.5734	-.3779

ALPHAO(2) = -8.120 BETAO (3) = -4.940

SECTION (1)LEFT VERTICAL DEPENDENT VARIABLE CP

Z/BV	.1580	.3160	.6000	.8400	.9250
X/CV					
.000	.4270	.3144	.3596	.4149	.3225
.025	.3572	.3319	.3529	.3239	.2164
.050	.3368	.3089	.3145	.2937	.2764
.150	.2304	.2097	.1911	.1481	.0849
.300	.1258	.0930	.0694	.0319	-.0907
.520	-.0892	-.1485	-.1468	-.2671	-.3375
.685	-.3376	-.6242	-1.0480	-.9448	-.7617
.775	-.2504	-.3710	-.5760	-.7450	-.8074
.900		-.2758	-.2782	-.4287	-.3453

[illegible] LEFT VERTICAL (RB1V31)

ALPHA(2) = -8.130 BETA(4) = 3.270

SECTION (1)LEFT VERTICAL DEPENDENT VARIABLE CP

Z/BV	.1580	.3160	.6000	.8400	.9250
X/CV					
.000	.4788	.4004	.4850	.5002	.4183
.025	.2414	.1964	.2203	.2109	.0372
.050	.2672	.2073	.2154	.1985	.2169
.150	.1594	.1375	.1228	.0647	.0343
.300	.0655	.0425	.0206	.0154	-.1590
.520	-.1272	-.1875	.1755	.2424	-.3534
.685	-.3527	-.6708	-1.0790	-.7925	-.7775
.775	-.2618	-.3984	-.8128	-.6629	-.5206
.900		-.2909	-.3410	-.4527	-.2320

ALPHA(2) = -8.130 BETA(5) = 1.600

SECTION (1)LEFT VERTICAL DEPENDENT VARIABLE CP

Z/BV	.1580	.3160	.6000	.8400	.9250
X/CV					
.000	.5138	.4705	.5438	.5541	.5159
.025	.0724	.0050	.0222	.0317	-.2134
.050	.1892	.1356	.0887	.0698	.1051
.150	.0963	.0680	.0491	.0049	-.0203
.300	.0113	-.0133	-.0360	-.0600	-.1658
.520	-.1661	-.2267	-.2134	-.2916	-.3658
.685	-.3726	-.6838	-1.1090	-.7898	-.9456
.775	-.2717	-.4074	-.7222	-.6316	-.5964
.900		-.2869	-.3872	-.4676	-.2461

ALPHA(2) = -8.130 BETA(6) = .010

SECTION (1)LEFT VERTICAL DEPENDENT VARIABLE CP

Z/BV	.1580	.3160	.6000	.8400	.9250
X/CV					
.000	.5288	.4999	.5703	.5441	.5422
.025	-.1249	-.2730	-.5251	-.3582	-.5672
.050	.0948	.0039	-.0443	-.0893	-.1774
.150	.0172	-.0220	-.0564	-.1122	-.1068
.300	-.0591	-.0835	-.1115	-.1303	-.2168
.520	-.2137	-.2743	-.2664	-.3262	-.3773
.685	-.4132	-.7051	-1.1350	-.5949	-.9176
.775	-.2854	-.4457	-.6133	-.5034	-.4219
.900		-.3391	.4161	-.3794	-.2344

ORIGINAL PAGE IS OF POOR QUALITY

ARC11-718 IA14 O1+T12+S12N25+AT10 LEFT VERTICAL (RB1V51)

ALPHAO(2) = -8.120 BETAO (7) = 1.700

SECTION (1)LEFT VERTICAL DEPENDENT VARIABLE CP

Z/BV	.1580	.3160	.6000	.8400	.9250
X/CV					
.000	.5182	.4878	.5231	.4735	.4952
.025	-.2911	-.5237	-.6029	-.7858	-.6973
.050	-.0560	-.4127	-.5481	-.6814	-.6566
.150	-.0710	-.1155	-.1790	-.2489	-.2757
.300	-.1409	-.1496	-.2045	-.2104	-.2469
.520	-.2564	-.3162	-.3167	-.3513	-.3720
.685	-.4461	-.7262	-1.1190	-.5643	-.6912
.775	-.2981	-.4900	-.5813	-.4490	-.3317
.900		-.3860	-.4001	-.3394	-.2354

ALPHAO(2) = -8.110 BETAO (8) = 3.340

SECTION (1)LEFT VERTICAL DEPENDENT VARIABLE CP

Z/BV	.1580	.3160	.6000	.8400	.9250
X/CV					
.000	.4905	.4043	.4438	.3660	.4060
.025	-.3675	-.7508	-.7140	-.8585	-.9100
.050	-.3842	-.6310	-.7092	-.8652	-.8657
.150	-.1453	-.3227	-.4905	-.6584	-.6978
.300	-.2654	-.2386	-.3414	-.4165	-.4622
.520	-.2978	-.3587	-.3987	-.4208	-.3760
.685	-.4179	-.6189	-.7821	-.5821	-.5182
.775	-.2802	-.4774	-.4498	-.3725	-.3127
.900		-.3449	-.2807	-.2332	-.2090

ALPHAO(2) = -8.080 BETAO (9) = 4.950

SECTION (1)LEFT VERTICAL DEPENDENT VARIABLE CP

Z/BV	.1580	.3160	.6000	.8400	.9250
X/CV					
.000	.4468	.3286	.3301	.2489	.3158
.025	-.4171	-.7601	-.9192	-.9855	-1.0770
.050	-.4733	-.7481	-.9411	-1.0500	-1.0480
.150	-.2283	-.5748	-.8266	-.8758	-.9727
.300	-.3237	-.4197	-.6432	-.7372	-.7631
.520	-.4275	-.4285	-.5185	-.5151	-.4975
.685	-.4075	-.5938	-.7353	-.5814	-.5689
.775	-.2669	-.4640	-.4655	-.3281	-.3422
.900		-.3214	-.3006	-.2527	-.2694

[illegible] LEFT VERTICAL [illegible]

ALPHA [illegible] -8.080 BETAC [illegible] = 5.7[illegible]

SECTION [illegible] LEFT VERTICAL DEPENDENT VARIABLE [illegible]

Z/BV	.1580	.3160	.6000	.8400	.9250
X/CV					
.000	.5663	.2527	.2089	.1196	.2179
.025	-.4882	-.8864	-1.0500	-.8544	-.5692
.050	-.5500	-.8269	-1.0710	-.8574	-.6653
.150	.5125	-.7415	-.9896	-.8197	-.6972
.300	-.5410	-.6268	-.8840	-.7315	-.6654
.525	-.4[illegible]3	-.5074	-.8040	-.6[illegible]2	-.5291
.685	.4[illegible]8	-.6396	-.6296	-.5074	-.4208
.775	.2847	-.4411	-.5174	-.4579	-.3927
.900		-.3189	-.4055	-.3541	.3640

ALPHA 2 = [illegible] BETAC [illegible] = 8.570

SECTION 1 LEFT VERTICAL DEPENDENT VARIABLE CP

Z/B	.1580	.3160	.6000	.8400	.9250
X/C					
.000	.2820	.1775	.0873	.0007	.1154
.025	-.6179	-.9390	-1.1200	-.8018	-.6665
.050	-.6832	-.9296	-1.1560	-.8033	-.6726
.150	-.8045	.8956	-1.0930	-.8070	-.6861
.300	-.5176	-.7874	-1.0090	-.7362	-.6656
.525	-.5502	-.6[illegible]2	-.9556	-.6180	-.5748
.685	-.4545	-.7264	.6996	-.5193	-.4518
.775	-.2928	-.4964	-.6554	-.4780	-.4168
.900		-.3231	-.5651	-.4384	-.3902

ALPHAC 31 = -8.100 BETAC 31 = -8.140

SECTION (31 LEFT VERTICAL DEPENDENT VARIABLE CP

Z/BV	.1580	.3160	.6000	.8400	.9250
X/CV					
.000	.2639	.0777	.0058	.1717	.0738
.25	.5151	.4700	.4712	.4252	.3988
.050	.4554	.4226	.4091	.3807	.3459
.150	.3292	.3037	.2608	.2281	.1455
.300	.2[illegible]1	.1714	.1289	.0888	-.0129
.525	-.0279	-.1133	-.1203	-.2362	-.3098
.685	-.3259	-.5425	-.9142	-1.0830	-1.0890
.775	-.2514	.5[illegible]9	-.4248	-.9[illegible]3	.9[illegible]1
.900		-.2519	.3009	-.5481	-.3[illegible]

ORIGINAL PAGE IS OF POOR QUALITY

ARC11-716 IA14 O1+T12+S12N25+AT10 LEFT VERTICAL (RB1V31)

ALPHAO(3) = -6.110 BETAO (2) = -6.480

SECTION (1)LEFT VERTICAL DEPENDENT VARIABLE CP

Z/BV	.1580	.3160	.6000	.8400	.9250
X/CV					
.000	.3346	.1920	.2115	.2730	.1783
.025	.4199	.3997	.4107	.3711	30
.050	.3882	.3596	.3552	.3299	.3017
.150	.2615	.2440	.2257	.1813	.1089
.300	.1590	.1260	.0947	0498	-.0632
.520	-.0876	-.1339	-.1565	-.2683	-.3386
.685	-.3255	-.5311	-.9900	-1.1210	-1.0820
.775	-.2471	- 3212	-.4634	-1.0130	-1.0090
.900		-.2550	-.2608	-.5539	-.3520

ALPHAO(3) = -6.130 BETAO (3) = -4.820

SECTION (1)LEFT VERTICAL DEPENDENT VARIABLE CP

Z/BV	.1580	.3160	.6000	8400	.9250
X/CV					
.000	.4047	.2908	.3165	.3768	.2798
.025	.3152	.2928	.3264	.3033	.2091
.050	.3032	.2804	.2871	.2730	.2516
.150	.1935	.1839	.1698	.1268	.0681
.300	.0955	.0740	.0545	.0151	-.0983
.520	-.1040	-.1590	-.1571	-.2807	- 3499
.685	-.3208	-.5984	-1.0540	-.9725	-.9235
.775	-.2599	-.3553	-.5092	-.7617	-.6183
.900		-.2623	-.2535	-.4235	-.3172

ALPHAO(3) = -6.140 BETAO (4) = -3.220

SECTION (1)LEFT VERTICAL DEPENDENT VARIABLE CP

Z/BV	.1580	.3160	.6000	.8400	.9250
X/CV					
.000	.4518	.3648	.4299	.4617	.3801
025	.1945	.1557	.2022	.1945	.0361
.050	.2285	.1747	.1943	.1801	.1689
.150	.1241	.1112	.1055	.0838	.0219
300	.0406	.0196	.0048	-.0279	-.1520
.520	-.1441	-.1980	-.1917	-.2685	- 3677
.685	-.3391	-.6305	-1.0790	-.9232	-.6945
775	-.2589	- 3676	-.6248	-.6683	-.4798
.900		-.2744	-.3113	-.3927	-.2423

[illegible] DATA [illegible] LEFT VERT [illegible] [illegible]

ALPHA [illegible] = -8.030 [illegible] = -1.827

SECTION [illegible] LEFT VERTICAL DEPENDENT VARIABLE CP

Z/BY	.1580	.3160	.6000	.8400	.9250
X/CV					
.000	.4768	.4219	.5042	.5182	.4753
.025	.0324	.0240	.0049	.0173	-.2138
.050	.1444	.1019	.0680	.0581	.1187
.150	.0553	.0407	.0241	-.0188	-.0378
.300	-.0165	-.0335	-.0545	-.0737	-.1896
.520	-.1837	-.2410	-.2362	-.3048	-.3923
.685	-.3578	-.6455	1.1120	-.7314	-.8939
.775	-.2582	-.5310	-.6441	-.6272	-.5177
.900		-.2810	-.3415	-.4561	-.2188

ALPHA(6) = -8.030 BETA(6) = .000

SECTION (1) LEFT VERTICAL DEPENDENT VARIABLE CP

Z/BY	.1580	.3160	.6000	.8400	.9250
X/CV					
.000	.4883	.4501	.5324	.5568	.5026
.025	-.1650	-.3054	-.3484	-.3581	-.5476
.050	.0554	-.0348	-.1[illegible]	-.1047	-.2208
.150	-.0284	.0521	-.[illegible]	-.1213	-.1195
.300	-.1001	.0032	-.1257	-.1389	-.2399
.520	-.2292	.2803	-.2635	-.3395	-.4005
.685	-.3966	-.6745	-1.1290	-.6101	-.[illegible]41
.775	-.2753	-.4274	.6[illegible]4	.5064	.7[illegible]0
.900		-.3572	-.3[illegible]4	-.3914	-.2326

ALPHA(7) = -8.030 BETA(7) = 1.640

SECTION (1) LEFT VERTICAL DEPENDENT VARIABLE CP

Z/BY	.1580	.3160	.6000	.8400	.9250
X/CV					
.000	.4900	.4168	.4838	.4368	.4571
.025	-.3169	-.5611	-.8007	-.7704	-.6722
.050	-.0717	-.4585	-.5590	-.6625	-.6527
.150	-.1091	-.1594	-.2030	-.2616	-.2406
.300	-.1898	-.1734	-.2192	-.2325	-.2618
.520	-.2140	-.3266	-.3248	-.3656	-.5317
.685	.4262	.6918	-1.1140	-.5643	.6749
.775	-.2957	.4779	.5703	-.4507	-.3311
.900		.3783	.3651	-.3456	-.2319

APC11-716 IA14 OL+T12+S12N25+AT10 LEFT VERTICAL (RB1V31)

ALPHAO(3) = -6.180 BETAO (8) = 5.330

SECTION (1)LEFT VERTICAL DEPENDENT VARIABLE CP

X/CV \ Z/BV	.1580	.3160	.6000	.8400	.9250
.000	.4816	.3696	.4000	.5283	.3665
.025	.3842	-.7708	-.6856	-.9084	-.9383
.050	-.3875	-.6546	-.6815	-.9190	-.9154
.150	-.1735	-.5530	-.6108	-.6539	-.7383
.300	-.3079	-.3263	-.4046	-.4418	-.4996
.520	-.3475	-.3415	-.3727	-.4524	-.3776
.665	-.3527	-.6159	-.8439	-.5546	-.3074
.775	-.2943	-.4625	-.4661	-.3632	-.3015
.900		-.3268	-.2973	-.2449	-.2095

ALPHAO(3) = -6.160 BETAO (9) = 5.010

SECTION (1)LEFT VERTICAL DEPENDENT VARIABLE CP

X/CV \ Z/BV	.1580	.3160	.6000	.8400	.9250
.000	.4197	.2931	.2648	.1982	.2629
.025	-.4800	-.8108	-.9474	-.9703	-.9863
.050	-.5174	-.7923	-.9669	-.9844	-1.0010
.150	-.2494	-.6025	-.6537	-.8798	-.8789
.300	-.3610	-.4492	-.6883	-.7426	-.7151
.520	-.4465	-.4258	-.5418	-.3112	-.5493
.665	-.3483	-.5804	-.7111	-.3722	-.4237
.775	-.2740	-.4331	-.4649	-.3137	-.3626
.900		-.3049	-.2915	-.2404	-.2704

ALPHAO(3) = -6.140 BETAO (10) = 6.740

SECTION (1)LEFT VERTICAL DEPENDENT VARIABLE CP

X/CV \ Z/BV	.1580	.3160	.6000	.8400	.9250
.000	.3459	.1861	.1705	.0744	.1705
.025	-.5079	-.8088	-1.0880	-.8722	-.8834
.050	-.5656	-.8565	-1.0840	-.8685	-.8902
.150	-.5235	-.7699	-1.0090	-.8363	-.8856
.300	-.3899	-.6413	-.9056	-.7373	-.6732
.520	-.3017	-.5119	-.8255	-.6127	-.5503
.665	.4080	-.6908	-.8651	-.5105	-.4381
.775	-.2848	-.4471	-.5631	-.4702	-.4089
.900		-.3284	-.4313	-.4224	-.3706

[illegible] LEFT VERTICAL [illegible]

ALPHA [illegible] = [illegible] BETA (1) = [illegible]

SECTION [illegible] LEFT VERTICAL DEPENDENT VARIABLE CP

Z/B	.1580	.3160	.6000	.8400	.9250
X/C					
.000	.2679	.0817	.0569	-.0549	.0679
.025	.8247	.9440	1.1260	.8215	[illegible]
.050	.8676	-.9306	-1.1411	[illegible]	[illegible]
.150	-.7974	-.9038	-1.0450	[illegible]	[illegible]
.300	.3404	-.7939	-1.0220	[illegible]	[illegible]
.525	[illegible]	.6129	-.8621	-.6217	[illegible]
.685	[illegible]	-.7078	-.7142	-.5268	-.4501
.775	.2637	-.4832	-.6751	-.4924	-.4178
.900		-.3276	-.5755	-.4443	-.3925

ALPHA [illegible] = -4.170 BETA (1) = -9.980

SECTION (2) LEFT VERTICAL DEPENDENT VARIABLE CP

Z/B	.1580	.3160	.6000	.8400	.9250
X/C					
.000	.1759	-.0469	.0755	.0223	-.0751
.025	.5499	.5996	.4956	.4511	.4458
.050	.5025	.4976	.4370	.4138	.3578
.150	.3677	.3392	.3035	.2513	.1649
.300	.2446	.2023	.1809	.1106	-.0095
.525	[illegible]	[illegible]	.1027	.2273	-.2424
.685	-.3271	[illegible]	-.7240	-1.0160	-1.0250
.775	-.2481	[illegible]	[illegible]	-.6728	[illegible]
.900		.2438	-.3325	-.5026	-.4525

ALPHA (4) = -4.190 BETA (2) = -7.970

SECTION (3) LEFT VERTICAL DEPENDENT VARIABLE CP

Z/B	.1580	.3160	.6000	.8400	.9250
X/C					
.000	.2620	.0857	.0878	.1332	.0502
.025	.4724	.4411	.4414	.4004	.4219
.050	.4263	.3938	.3835	.3604	.3132
.150	[illegible]	.2708	.2496	.1958	.1244
.300	.1497	.1565	.1113	[illegible]	[illegible]
[illegible]	[illegible]	.1234	-.1320	-.2506	[illegible]
.685	.3260	.3267	-.8409	-1.0590	[illegible]
.775	-.2471	[illegible]	.3965	-.8187	[illegible]
.900		.3379	[illegible]	-.5281	.3769

ARC11-78 TA14 OL+T12+S12N25+AT10 LEFT VERTICAL (RB1V31)

ALPHAO(4) = -4.210 BETAO (3) = -5.970

SECTION (1)LEFT VERTICAL DEPENDENT VARIABLE CP

Z/BV	.1580	.3180	.6000	.8400	.9250
X/CV					
.000	.3303	.1699	.2024	.2576	.1692
.025	.3645	.3408	.3612	.3346	.3135
.050	.3525	.3042	.3126	.3008	.2639
.150	.2168	.1991	.1675	.1485	.0789
.300	.1192	.0892	.654	.0264	-.0782
.520	-.0095	-.1555	-.1571	-.2755	-.3551
.685	-.3262	-.5463	-.9659	-1.0940	1.0430
.775	-.2478	-.5129	-.4451	-.8865	-.8870
.900		-.2526	-.2535	-.4876	-.3602

ALPHAO(4) = -4.190 BETAO (4) = -3.980

SECTION (1)LEFT VERTICAL DEPENDENT VARIABLE CP

Z/BV	.1580	.3180	.6000	.8400	.9250
X/CV					
.000	.4040	.2949	.3321	.3615	.3019
.025	.2180	.1921	.2517	.2323	.1706
.050	.2220	.1911	.2208	.2100	.1815
.150	.1269	.1150	.1144	.0822	.0222
.300	.0403	.0214	.0139	-.0202	-.1141
.520	-.1500	-.1860	-.1894	-.2908	-.3655
.685	-.3234	-.5929	-.9829	-.9104	-.8470
.775	-.2424	-.3987	-.5495	-.7567	-.5122
.900		-.2665	-.3051	-.3909	-.2295

ALPHAO(4) = -4.180 BETAO (5) = -1.980

SECTION (1)LEFT VERTICAL DEPENDENT VARIABLE CP

Z/BV	.1580	.3180	.6000	.8400	.9250
X/CV					
.000	.4909	.3656	.4556	.4709	.4214
.025	.0080	-.0210	.0492	.0824	-.0550
.050	.1266	.0775	.0849	.0783	.0731
.150	.0375	.0315	.0308	-.0055	-.0333
.300	-.0403	-.0432	-.0926	-.0768	-.1580
.520	-.1896	-.2365	-.2305	-.3034	-.3760
.685	-.3468	-.6190	-1.0870	-.8781	-.7115
.775	-.2570	-.3665	-.6145	-.7227	-.5262
.900		-.2020	-.3030	-.3966	-.2673

[illegible] LEFT VERTICAL (RB1V31)

ALPHAO([illegible]) = -4.100 BETA([illegible] 6) = .030

SECTION (1)LEFT VERTICAL DEPENDENT VARIABLE CP

Z/BV	.1580	.3160	.6000	.8400	.9250
X/CV					
.000	.4561	.3959	.4989	.4759	.4701
.025	-.2026	-.3393	-.3610	-.3633	-.4415
.050	.0235	-.0741	-.0998	-.1227	-.3086
.150	-.0777	-.0821	-.0983	-.1385	-.1292
.300	-.1365	-.1271	-.1416	-.1525	-.1946
.520	-.2457	-.2938	-.2985	-.3431	-.4192
.685	-.4100	-.6778	-1.1100	-.6020	-.7631
.775	-.2832	-.4127	-.6171	-.5147	-.3538
.900		-.3537	-.3722	-.3912	-.2279

ALPHAO(4) = -4.170 BETAO(7) = 2.020

SECTION (1)LEFT VERTICAL DEPENDENT VARIABLE CP

Z/BV	.1580	.3160	.6000	.8400	.9250
X/CV					
.000	.4573	.3770	.4317	.3765	.4066
.025	-.3592	-.6600	-.8225	-.8475	-.6660
.050	-.1503	-.5574	-.6948	-.7349	-.6589
.150	-.1533	-.2583	-.2832	-.3010	-.4519
.300	-.2970	-.2162	-.2532	-.2231	-.2855
.520	-.3037	-.3439	-.3535	-.3884	-.4041
.685	-.4195	-.6389	-1.0250	-.5863	-.6077
.775	-.2944	-.4704	-.5433	-.4469	-.3326
.900		-.3599	-.3051	-.3241	-.2359

ALPHAO(4) = -4.240 BETAO(8) = 4.040

SECTION (1)LEFT VERTICAL DEPENDENT VARIABLE CP

Z/BV	.1580	.3160	.6000	.8400	.9250
X/CV					
.000	.4153	.3080	.3034	.2273	.2913
.025	-.4717	-.7968	-.8869	-.8240	-.8293
.050	-.4829	-.7394	-.9025	-.8260	-.8130
.150	-.2229	-.4799	-.7841	-.7762	-.8115
.300	-.3667	-.4227	-.5278	-.6706	-.7811
.520	-.4412	-.4137	-.3914	-.5650	-.5156
.685	-.3680	-.5839	-.8748	-.4265	-.3775
.775	-.2976	-.4475	-.4945	-.3395	-.3269
.900		-.3527	-.2835	-.2581	-.2541

ARC11-716 IA14 O1+T12+S12N25+AT10 LEFT VERTICAL (RB1V31)

ALPHAO(4) = -4.230 BETAO (9) = 6.050

SECTION (1)LEFT VERTICAL DEPENDENT VARIABLE CP

Z/BV	.1580	.3160	.6000	.8400	.9250
X/CV					
.000	.3467	.1944	.1794	.0752	.1638
.025	-.5040	-.8854	-1.0410	-.8685	-.6844
.050	-.5608	-.8517	-1.0530	-.8672	-.6751
.150	-.4159	-.7549	-.9666	-.8057	-.6758
.300	-.4043	-.5844	-.8541	-.7103	-.6385
.520	-.5044	-.4724	-.7788	-.5964	-.5128
.685	-.3840	-.6079	-.6130	-.4981	-.4170
.775	-.2780	-.4012	-.4868	-.4496	-.3772
.900		-.2920	-.3538	-.3940	-.3414

ALPHAO(4) = -4.200 BETAO (10) = 8.070

SECTION (1)LEFT VERTICAL DEPENDENT VARIABLE CP

Z/BV	.1580	.3160	.6000	.8400	.9250
X/CV					
.000	.2770	.0645	.0439	-.0722	.0473
.025	-.6058	-.9545	-1.1290	-.8204	-.6703
.050	-.6529	-.9288	-1.1430	-.8298	-.6759
.150	-.7579	-.8987	-1.0920	-.8290	-.6761
.300	-.3710	-.7845	-1.0270	-.7253	-.6672
.520	-.5651	-.5874	-.8828	-.6140	-.5669
.685	-.3949	-.6638	-.7125	-.5228	-.4549
.775	-.2099	-.4602	-.6709	-.4834	-.4254
.900		-.3168	-.5523	-.4411	-.3903

ALPHAO(4) = -4.200 BETAO (11) = 10.080

SECTION (1)LEFT VERTICAL DEPENDENT VARIABLE CP

Z/BV	.1580	.3160	.6000	.8400	.9250
X/CV					
.000	.1744	-.0879	-.1088	-.2219	-.0802
.025	-.7188	-1.0230	-1.1390	-.7375	-.6231
.050	-.7555	-1.0270	-1.1260	-.7257	-.6085
.150	-.9932	-1.0410	-1.1470	-.7171	-.6368
.300	-.3797	-.9732	-1.1000	-.7047	-.6078
.520	-.5919	-.7352	-1.0100	-.6185	-.3520
.685	-.3810	-.7079	-.8786	-.5295	-.4631
.775	-.2873	-.4225	-.8240	-.5154	-.4445
.900		-.3019	-.6669	-.4844	-.4355

[illegible] LEFT VERTICAL (RB1.31)

ALPHA([illegible]) = -2.870 BETA([illegible]) = -9.99[illegible]

SECTION (1)LEFT VERTICAL DEPENDENT VARIABLE CP

Z/BV	.1580	.3160	.6000	.8400	.9250
X/CV					
.000	.1732	-.0853	-.1078	-.0243	-.1094
.025	.5326	.4971	.4775	.4329	.4201
.050	.4892	.4459	.4232	.3891	.3404
.150	.3619	.3265	.2894	.2376	.1543
.300	.2374	.1940	.1473	.1006	-.0983
.520	-.0051	-.1053	-.1090	-.2334	-.2578
.685	-.3278	-.5034	-.6886	-1.0080	-1.0060
.775	-.2591	-.2632	-.3575	-.6313	-.7318
.900		-.2451	-.3250	-.5037	-.4254

ALPHA(5) = -2.890 BETA(2) = -7.990

SECTION (1)LEFT VERTICAL DEPENDENT VARIABLE CP

Z/BV	.1580	.3160	.6000	.8400	.9250
X/CV					
.000	.2555	.0483	.0436	.1030	-.0009
.025	.4514	.4231	.4181	.3821	.4058
.050	.4115	.3762	.3647	.3391	.3001
.150	.2810	.2630	.2312	.1855	.1080
.300	.1742	.1376	.0987	.0590	-.1316
.520	-.0506	-.1353	-.1425	-.2614	-.3086
.685	-.3314	-.5172	-.8033	-1.0470	-1.0500
.775	-.2477	-.2896	-.3879	-.7449	-.6418
.900		-.2508	-.2763	-.4999	-.3850

ALPHA(5) = -2.870 BETA(3) = -5.970

SECTION (1)LEFT VERTICAL DEPENDENT VARIABLE CP

Z/BV	.1580	.3160	.6000	.8400	.9250
X/CV					
.000	.3110	.1577	.1747	.2207	.1367
.025	.3586	.3201	.3469	.3238	.2975
.050	.3090	.2839	.2952	.2837	.2498
.150	.1995	.1867	.1752	.1345	.0689
.300	.1020	.0748	.0535	.0196	-.1615
.520	-.0960	-.1680	-.1712	-.2776	-.3683
.685	-.3266	-.5226	-.9195	-1.0790	-1.0740
.775	-.2454	-.3165	-.4254	-.7826	-.7266
.900		-.2597	-.2398	-.4567	-.3364

ORIGINAL PAGE IS OF POOR QUALITY

ARC11-716 IA14 O1+T12+S12N25+AT10 LEFT VERTICAL (RB1V31)

ALPHAO(5) = -2.080 BETAO (4) = -3.980

SECTION (1)LEFT VERTICAL DEPENDENT VARIABLE CP

Z/BV	.1580	.3160	.6000	.8400	.9250
X/CV					
.000	.3889	.2687	.3103	.3606	.2722
.025	.1932	.1627	.2263	.2228	.1596
.050	.1932	.1634	.1954	.1947	.1629
.150	.0934	.0966	.0991	.0612	.0100
.300	.0153	.0041	-.0041	-.0369	-.1900
.520	-.1580	-.1918	-.1948	-.3112	-.3690
.685	-.3271	-.5755	-.9809	-.9552	-.7143
.775	-.2592	-.3370	-.5376	-.7470	-.5093
.900		-.2703	-.2939	-.4246	-.2504

ALPHAO(5) = -2.840 BETAO (5) = -1.990

SECTION (1)LEFT VERTICAL DEPENDENT VARIABLE CP

Z/BV	.1580	.3160	.6000	.8400	.9250
X/CV					
.000	.4246	.3403	.4290	.4431	.4006
.025	-.0266	-.0568	.0336	.0464	-.0630
.050	.0949	.0523	.0665	.0640	.0537
.150	.0030	.0051	.0188	-.0239	-.0488
.300	-.0599	-.0593	-.0615	-.0897	-.2732
.520	-.2027	-.2439	-.2381	-.3168	-.3849
.685	-.3393	-.6001	-1.0840	-.8174	-.7231
.775	-.2526	-.3623	-.5726	-.6801	-.4622
.900		-.2760	-.2541	-.3915	-.2381

ALPHAO(5) = -2.840 BETAO (6) = .010

SECTION (1)LEFT VERTICAL DEPENDENT VARIABLE CP

Z/BV	.1580	.3160	.6000	.8400	.9250
X/CV					
.000	.4437	.3735	.4727	.4501	.4473
.025	-.2293	-.3724	-.3791	-.3713	-.4551
.050	-.0013	-.1014	-.1103	-.1458	-.3056
.150	-.1053	-.1016	-.0996	-.1678	-.1437
.300	-.1550	-.1467	-.1466	-.1643	-.3221
.520	-.2645	-.3008	-.3042	-.3550	-.4262
.685	-.5914	-.6354	-1.0870	-.5863	-.7050
.775	-.2780	-.4185	-.6028	-.4850	-.3360
.900		-.3366	-.3253	-.3751	-.2217

[illegible] [illegible] [illegible] [illegible] [illegible] [illegible] [illegible] [illegible] [illegible] [illegible] [illegible] (RB1X51)

ALPHAC([illegible]) = 2.840 BETAC ([illegible]) = 2.040

SECTION (1)LEFT VERTICAL DEPENDENT VARIABLE CP

Z/BV	.1580	.3160	.6000	.8400	.925
X/CV					
.000	.4505	.5491	.4061	.3491	.3796
.025	-.3837	-.6659	-.7940	-.5445	-.6836
.050	-.1493	-.5897	-.6903	-.7277	-.6642
.150	-.1766	-.3058	-.2813	.3142	-.4711
.300	-.3235	-.2158	-.2669	-.2807	-.3602
.520	-.3096	-.3520	-.3561	-.4013	-.4052
.685	-.5418	-.6120	-.9503	-.5896	-.5997
.775	[illegible]	-.4542	-.5200	-.4433	-.3224
.900		-.3410	-.2980	-.3211	-.2132

ALPHAC (5) = -2.880 BETAC (8) = 4.050

SECTION (1)LEFT VERTICAL DEPENDENT VARIABLE CP

Z/BV	.1580	.3160	.6000	.8400	.9250
X/CV					
.000	.3959	.2777	.2694	.1927	.2589
.025	-.4934	-.8061	-.9024	-.7912	-.7815
.050	-.4885	-.7648	-.9119	-.7994	-.7929
.150	-.2452	-.5086	-.8044	-.7397	-.8348
.300	-.3872	-.4441	-.5656	-.6803	-.7869
.520	-.4100	-.3617	-.3745	-.5647	-.4960
.685	-.3102	-.5334	-.8348	-.3942	-.3598
.775	-.2726	-.3945	-.4701	-.3333	-.2812
.900		-.2915	-.2549	-.2565	-.2106

ALPHAC(5) = -2.870 BETAC (9) = 6.080

SECTION (1)LEFT VERTICAL DEPENDENT VARIABLE CP

Z/BV	.1580	.3160	.6000	.8400	.9250
X/CV					
.000	.3228	.1624	.1309	.0281	.1244
.025	-.5229	-.8975	-1.0840	-.8357	-.6857
.050	-.5402	-.8776	-1.0760	-.8481	-.6481
.150	-.4615	-.7862	-.9340	.8031	.6667
.300	-.4248	-.6197	-.8864	-.7038	-.6285
.520	-.3087	-.4750	-.6017	-.5758	-.5117
.685	-.3547	-.5843	-.6047	-.4817	-.4133
.775	-.2792	-.3733	-.4888	-.4424	-.3905
.900		-.2837	-.3425	-.3972	-.3421

ARC11-716 IA14 01+T12+S12N25+AT10 LEFT VERTICAL (RB1V31)

ALPHAO(5) = -2.870 BETAO (10) = 8.070

SECTION (1)LEFT VERTICAL DEPENDENT VARIABLE CP

Z/BV	.1580	.3160	.6000	.8400	.9250
X/CV					
.000	.2625	.0551	.0145	-.1131	.0088
.025	-.8107	-.9451	-1.1270	-.8028	-.6492
.050	-.6599	-.9383	-1.1390	-.8169	-.6534
.150	-.7915	-.9151	-1.0900	-.8253	-.6686
.300	-.3858	-.7945	-1.0290	-.7340	-.6460
.520	-.5520	-.5755	-.8696	-.6177	-.5509
.685	-.3650	-.6323	-.7207	-.5237	-.4554
.775	-.2788	-.4390	-.6841	-.4877	-.4290
.900		-.2980	-.5283	-.4529	-.3972

ALPHAO(5) = -2.830 BETAO (11) = 10.090

SECTION (1)LEFT VERTICAL DEPENDENT VARIABLE CP

Z/BV	.1580	.3160	.6000	.8400	.9250
X/CV					
.000	.1595	-.1117	-.1482	-.2580	-.0977
.025	-.7265	-1.0370	-1.1400	-.7280	-.6176
.050	-.7661	-1.0420	-1.1080	-.7179	-.6077
.150	-1.0140	-1.0540	-1.1110	-.6961	-.6131
.300	-.3993	-.9945	-1.0950	-.6862	-.5956
.520	-.5772	-.7358	-1.0190	-.6180	-.5465
.685	-.3725	-.6678	-.9016	-.5352	-.4634
.775	-.2813	-.4031	-.7974	-.5119	-.4457
.900		-.2875	-.6357	-.4879	-.4350

ALPHAO(6) = -.690 BETAO (1) = -10.000

SECTION (1)LEFT VERTICAL DEPENDENT VARIABLE CP

Z/BV	.1580	.3160	.6000	.8400	.9250
X/CV					
.000	.1436	-.1215	-.1835	-.1079	-.1841
.025	.5218	.4829	.4567	.4121	.3833
.050	.4839	.4369	.4063	.3756	.3172
.150	.3498	.3143	.2757	.2298	.1391
.300	.2304	.1672	.1412	.0915	-.0776
.520	-.0078	-.1069	-.1161	-.2378	-.2588
.685	-.3318	-.4712	-.5899	-.9593	-.9266
.775	-.2594	-.2452	-.3530	-.5515	-.6241
.900		-.2485	-.3200	-.4881	-.4218

[illegible] LEFT VERTICAL [illegible]

ALPHA(6) = -.680 BETA(2) = [illegible]

SECTION (1)LEFT VERTICAL DEPENDENT VARIABLE CP

Z/BV	.158	.3180	.6000	.8400	.9250
X/CV					
.000	.2296	.0093	-.0298	.0181	-.0790
.025	.4341	.4091	.4022	.3649	.5975
.050	.3927	.3630	.3480	.3262	.2835
.150	.2691	.2464	.2208	.1764	.0978
.300	.1683	.1303	.0936	.0503	-.1146
.520	-.0561	-.1344	-.1492	-.2772	-.2982
.685	-.3322	-.4941	-.7168	-1.0200	-.9943
.775	-.2504	-.2854	-.3791	-.6368	-.6790
.900		-.2500	-.2642	-.4708	-.3777

ALPHA(6) = -.670 BETA(3) = -5.980

SECTION (1)LEFT VERTICAL DEPENDENT VARIABLE CP

Z/BV	.1580	.3180	.6000	.8400	.9250
X/CV					
.000	.2956	.1071	.1049	.1521	.0620
.025	.3279	.3046	.3364	.3087	.3158
.050	.2993	.2691	.2859	.2765	.2368
.150	.1798	.1417	.1631	.1298	.0581
.300	.0903	.0733	.0426	.0139	-.1295
.520	-.1029	.1643	-.1790	-.2920	-.3158
.685	-.3174	-.4974	-.7808	-1.0280	-1.0310
.775	-.2359	-.3059	-.3788	-.6656	-.5855
.900		-.2465	-.2164	-.4271	-.3047

ALPHA(6) = -.680 BETA(4) = -5.970

SECTION (1)LEFT VERTICAL DEPENDENT VARIABLE CP

Z/BV	.1580	.3180	.6000	.8400	.9250
X/CV					
.000	.1638	.2215	.2477	.2959	.2137
.025	.1639	.1385	.2196	.2293	.1835
.050	.1705	.1441	.1915	.1932	.1696
.150	.0718	.0718	.0924	.0851	.0123
.300	.0034	-.0028	-.0035	-.0524	-.1348
.520	-.1535	-.1897	-.2110	-.3008	-.3494
.685	-.3162	-.5299	-.9354	-.9896	-.9246
.775	-.2552	[illegible]	-.4728	-.7500	[illegible]
.900		-.2578	-.2416	-.3624	[illegible]

ARC11-7.6 IA14 O1+T12+S12N25+AT10 LEFT VERTICAL (RB1V31)

ALPHAO(6) = -.660 BETAO (5) = -1.980

SECTION (1)LEFT VERTICAL DEPENDENT VARIABLE CP

Z/BV	.1580	.3160	.6000	.8400	.9250
X/CV					
.000	.3889	.2904	.3753	.3988	.3490
.025	-.0514	-.0716	.0532	.0685	-.0368
.050	.0561	.0247	.0735	.0658	.0496
.150	-.0375	-.0173	.0121	-.0178	-.0625
.300	-.0897	-.0691	-.0641	-.0948	-.1757
.520	-.2161	-.2415	-.2418	-.3219	-.3866
.685	-.3087	-.5432	-.9824	-.8145	-.5573
.775	-.2368	-.3231	-.5208	-.6487	-.4142
.900		-.2613	-.2698	-.3687	-.2642

ALPHAO(6) = -.660 BETAO (6) = .010

SECTION (1)LEFT VERTICAL DEPENDENT VARIABLE CP

Z/BV	.1580	.3160	.6000	.8400	.9250
X/CV					
.000	.4064	.3334	.4429	.4174	.4092
.025	-.2646	-.4073	-.3687	-.3601	-.4412
.050	-.0386	-.1443	-.1174	-.1395	-.2802
.150	-.1525	-.1298	-.1145	-.1567	-.1494
.300	-.1932	-.1543	-.1548	-.1673	-.2576
.520	-.2716	-.2531	-.3098	-.3631	-.4257
.685	-.3574	-.6023	-1.0400	-.5844	-.6173
.775	-.2581	-.4011	-.8005	-.4676	-.2879
.900		-.3168	-.2747	-.3603	-.1782

ALPHAO(6) = -.670 BETAO (7) = 2.050

SECTION (1)LEFT VERTICAL DEPENDENT VARIABLE CP

Z/BV	.1580	.3160	.6000	.8400	.9250
X/CV					
.000	.4056	.3131	.3658	.3054	.3426
.025	-.4323	-.7070	-.7075	-.8012	-.6843
.050	-.1836	-.6093	-.6414	-.7287	-.6670
.150	-.2127	-.5442	-.3199	-.3078	-.4977
.300	-.3686	-.2254	-.2737	-.2897	-.3571
.520	.3069	-.3422	-.3668	-.4126	-.4227
.685	-.3370	-.5724	-.9040	-.5836	-.5147
.775	-.2799	-.4220	-.4953	-.3926	-.2866
.900		-.3172	-.2653	-.2532	-.1647

[illegible]

[illegible]

ALPHA = [illegible] BETA = [illegible]

SECTION 1: LEFT VERTICAL — DEPENDENT VARIABLE [illegible]

Z/CV	.1580	.3160	.6000	.8400	[illegible]
X/CV					
.000	.3708	.2468	.2239	.1450	[illegible]
.025	-.4995	-.8126	-.9184	-.7545	-.8595
.050	-.4946	-.7896	-.9154	-.7360	[illegible]
.150	-.2935	-.5259	-.8249	-.7285	[illegible]
.300	-.4170	-.4730	-.5597	-.6835	.7379
.520	-.4001	-.3558	-.3462	[illegible]	[illegible]
.685	-.2960	-.4968	-.8310	-.4073	-.3262
.775	.2569	-.3473	-.4662	-.3105	.2933
.900		-.2747	-.2345	-.2357	.1952

ALPHA = [illegible] BETA = [illegible]

SECTION 1: LEFT VERTICAL — DEPENDENT VARIABLE CP

Z/CV	.1580	.3160	.6000	.8400	.9250
X/CV					
.000	.3043	.1315	.0906	-.0237	.0758
.025	-.5535	.9081	-1.0750	-.8224	-.6527
.050	-.5984	-.8971	-1.0840	-.8164	-.6470
.150	-.5034	-.8076	-1.0070	-.7667	-.6537
.300	-.4445	-.8158	-.9066	.6942	-.6058
.520	-.4948	.4527	-.7975	-.5619	-.5062
.685	-.3415	.5462	-.5897	.4830	.4111
.775	.2731	-.3445	-.4329	-.4492	.3768
.900		-.2790	-.2654	-.3999	-.3406

ALPHA = [illegible] BETA = [illegible]

SECTION 1: LEFT VERTICAL — DEPENDENT VARIABLE CP

Z/CV	.1580	.3160	.6000	.8400	.9250
X/CV					
.000	.2556	.0082	-.0498	-.1815	-.0459
.025	-.6243	-.8650	-1.1550	-.7654	-.6346
.050	-.6706	-.9637	-1.1640	-.7739	-.6329
.150	-.8165	-.9517	-1.1250	.7513	-.6553
.300	-.4152	-.8390	-1.0550	-.7034	[illegible]
.520	.5558	.5649	.8715	-.6092	[illegible]
.685	.3542	-.6055	.7485	.5169	[illegible]
.775	.2620	.3986	.6451	.4927	-.4174
.900		-.2581	.4989	-.4526	[illegible]

ARC11-716 IA14 C6+T12+S12N25+AT10 LEFT VERTICAL (B1V31)

ALPHAO(6) = -.600 BETAO (11) = 10.120

SECTION (1) LEFT VERTICAL DEPENDENT VARIABLE CP

Z/BV	.1580	.3180	.6000	.8400	.9250
X/CV					
.000	.1507	-.1257	-.1891	-.3092	-.1473
.025	-.7514	-1.0440	-1.1200	-.7238	-.6034
.050	-.7715	-1.0460	-1.1000	-.7270	-.5906
.150	-1.0520	-1.0680	-1.1200	-.6975	-.6227
.300	-.4249	-1.0130	-1.0940	-.5781	-.5976
.520	-.5604	-.7366	-1.0290	-.6097	-.5460
.685	-.3698	-.6068	-.9324	-.5387	-.4760
.775	-.2611	-.3810	-.8074	-.5259	-.4516
.900		-.2767	-.6219	-.4902	-.4358

ALPHAO(7) = 2.060 BETAO (1) = -10.000

SECTION (1) LEFT VERTICAL DEPENDENT VARIABLE CP

Z/BV	.1580	.3180	.6000	.8400	.9250
X/CV					
.000	.1230	-.1580	-.2538	.1817	-.2627
.025	.4951	.4555	.4270	.3833	.3219
.050	.4517	.4100	.3811	.3514	.2867
.150	.3263	.2939	.2580	.2130	.1165
.300	.2172	.1676	.1246	.0808	-.0998
.520	-.0154	-.1152	-.1266	-.2515	-.2736
.685	-.3223	-.4381	-.5391	-.7660	-.7766
.775	-.2492	-.2415	-.3585	-.4819	-.5427
.900		-.2442	-.2992	-.4750	-.4050

ALPHAO(7) = 1.980 BETAO (2) = -5.980

SECTION (1) LEFT VERTICAL DEPENDENT VARIABLE CP

Z/BV	.1580	.3180	.6000	.8400	.9250
X/CV					
.000	.2648	.0715	.0302	.0710	-.0075
.025	.3004	.2882	.3161	.2980	.3215
.050	.2372	.2523	.2824	.2508	.2218
.150	.1808	.1635	.1508	.1090	.0444
.300	.0744	.0812	.0360	.0016	-.1422
.520	-.1068	-.1722	-.1901	-.3070	-.3271
.685	-.3245	-.4778	-.6728	-.954.	-.9187
.775	-.2346	-.3170	-.3783	-.5519	-.5231
.900		-.2392	-.2187	-.3832	-.2772

ORIGINAL PAGE IS
OF POOR QUALITY

[illegible] 97[illegible] 1745 [illegible] = [illegible]

SECTION [illegible] EFF VERTICAL DEPENDENT VARIABLE CP

Z/B	.1580	.3160	.6000	.8400	.9250
X/CV					
.000	.3243	.1891	.1773	.2441	.1545
.025	.1347	.1234	.2180	.2[illegible]	.1535
.050	.1310	.1234	.1755	.1[illegible]	.1368
.150	.0479	.0850	.0835	.0306	-.0198
.300	-.0[illegible]2	-.0128	-.0156	-.0604	-.1821
.500	-.1[illegible]	-.1990	-.2233	-.3[illegible]	-.3536
.665	-.1.25	-.3176	-.7590	-.9[illegible]	.6193
.775	.2245	-.3285	-.4169	-.5534	-.5[illegible]
.900		-.2511	-.2168	-.2653	-.177[illegible]

ALPHA [illegible] = 1.980 BETAC [illegible] = 1.990

SECTION 1 EFF VERTICAL DEPENDENT VARIABLE CP

Z/B	.1580	.3160	.6000	.8400	.9250
X/CV					
.000	.3278	.2551	.5451	.5589	.5[illegible]9
.025	-.1.13	.1141	.[illegible]471	.5494	-.[illegible]451
.050	[illegible].73	-.[illegible]355	.[illegible]566	.[illegible]434	.[illegible]237
.150	-.[illegible]720	-.[illegible]448	-.[illegible]340	-.0454	.0900
.300	.1.60	.1897	-.[illegible]772	.1.[illegible]2	.1931
.500	-.2268	.2496	.25[illegible]	-.3569	-.4[illegible]
.665	.2[illegible]	.5272	-.6821	-.8[illegible]59	-.5487
.775	-.25[illegible]1	.5289	-.4[illegible]2	-.6170	-.5734
.900		.2549	-.2249	-.3142	-.1[illegible]

ALPHA [illegible] = 1.980 BETAC [illegible] = .06[illegible]

SECTION [illegible] EFF VERTICAL DEPENDENT VARIABLE CP

Z/B	.1580	.3160	.6000	.8400	.9250
X/CV					
.000	.3640	.2866	.3981	.3748	.3671
.025	.3555	.4607	.3857	.3801	.4534
.050	.[illegible]858	.2[illegible]19	.1508	-.1596	.3[illegible]19
.150	-.197[illegible]	.1[illegible]	-.1274	.1854	.1687
.300	-.24[illegible]5	.1[illegible]	-.1625	-.1498	.2793
.500	-.24[illegible]	.[illegible]	-.3215	-.5[illegible]	-.4369
.665	-.5229	.5644	-.5221	-.5281	-.4942
.775	.2[illegible]	.3[illegible]	.1358	-.4554	.3[illegible]
.900		.[illegible]	.2648	.3118	-.1[illegible]

ARC11-716 IA14 OR+T12+B12N25+AT10 LEFT VERTICAL (RB1V31)

ALPHAO(7) = 1.970 BETAO (8) = 2.040

SECTION (1)LEFT VERTICAL DEPENDENT VARIABLE CP

Z/BV	.1580	.3160	.6000	.8400	.9250
X/CV					
.000	.3466	.2793	.3211	.2593	.2919
.025	-.4284	-.7533	-.8330	-.7370	-.8904
.050	-.1723	-.8363	-.8510	-.8027	-.6738
.150	-.2451	-.3853	-.3432	-.3500	-.5227
.300	-.4105	-.2863	-.2670	-.3098	-.3632
.520	-.3290	-.3352	-.3657	-.4368	-.4312
.685	-.3127	-.5443	-.8451	-.5833	-.4297
.775	-.2791	-.4029	-.4811	-.3601	-.2676
.900		-.3014	-.2619	-.2253	-.1296

ALPHAO(7) = 2.050 BETAO (7) = 4.050

SECTION (1)LEFT VERTICAL DEPENDENT VARIABLE CP

Z/BV	.1580	.3160	.6000	.8400	.9250
X/CV					
.000	.3405	.2150	.1611	.1014	.1621
.025	.5271	-.8356	-.8445	-.7526	-.9070
.050	-.5169	-.8233	-.8488	-.7253	-.8966
.150	-.3181	-.5564	-.8298	-.6663	-.8516
.300	-.4482	-.4918	-.6255	-.6587	-.7359
.520	-.3787	-.2878	-.3227	-.5310	-.4354
.685	-.2779	-.4428	-.7867	-.5845	-.5292
.775	-.2356	-.3118	-.4187	-.2932	-.2018
.900		-.2698	-.1894	-.2161	-.1103

ALPHAO(7) = 2.050 BETAO (8) = 6.070

SECTION (1)LEFT VERTICAL DEPENDENT VARIABLE CP

Z/BV	.1580	.3160	.6000	.8400	.9250
X/CV					
.000	.2768	.0825	.0209	-.0857	.0120
.025	-.5740	-.9215	-1.0780	-.7581	-.8273
.050	-.6258	-.9546	-1.0880	-.7546	-.8168
.150	-.5760	-.8333	-1.0380	-.8974	-.5981
.300	-.4593	-.6374	-.9400	-.8359	-.5594
.520	-.4438	-.4538	-.7719	-.5411	-.4907
.685	-.3124	-.9030	-.5132	-.4888	-.4138
.775	-.2819	-.3233	-.3548	-.4556	-.3733
.900		-.2831	-.1881	-.4038	-.3336

REVISI

ALPHA = 2.[illegible] BETA(0) = [illegible]

SECTION 1: LEFT VERTICA DEPENDENT VARIABLE =

X/Y	1500	5100	8000	8400	9250
000	.2125	.2266	.1116	-.2549	[illegible]
025	-.6387	.9648	1.1540	.7755	-.6245
050	-.5875	-.9745	-1.1800	-.7740	[illegible]
150	.8512	-.9646	-1.1280	-.7515	.6315
300	-.4567	-.8450	-1.0675	.6481	.6021
500	[illegible]	-.5649	.9992	[illegible]	.5363
675	-.5428	-.5061	-.7833	[illegible]	-.4645
775	[illegible]	.3769	-.6595	-.5345	[illegible]
900		-.2526	-.4372	-.4786	-.4049

ALPHA(0) = 2.020 BETA(0) = [illegible]

SECTION 1: LEFT VERTICA DEPENDENT VARIABLE CP

X/Y	1500	5100	8000	8400	9250
000	.1198	.1783	.2679	-.5532	[illegible]
025	[illegible]	[illegible]	1.1540	.6971	.6048
050	[illegible]	[illegible]	[illegible]	-.6885	.5931
150	[illegible]	[illegible]	[illegible]	.6608	-.5894
300	-.4637	-1.0450	-1.0839	-.6585	[illegible]
500	[illegible]	.7455	[illegible]	[illegible]	.5178
675	.5448	.4958	.4936	.5218	.4585
775	-.2658	.3489	.7615	.5223	-.4476
900		.2555	.5188	.4915	[illegible]

ALPHA(0) = 4.110 BETA(0) = -10.000

SECTION 1: LEFT VERTICA DEPENDENT VARIABLE CP

X/Y	1500	5100	8000	8400	9250
000	-.2351	.2132	.3180	-.2458	.3141
025	.4598	.4258	.4018	.3617	.5228
050	.5417	.5157	.3589	.3256	.2754
150	[illegible]	[illegible]	.2457	.2176	[illegible]
300	[illegible]	[illegible]	.1245	.1741	[illegible]
500	.1225	[illegible]	.1324	.2425	[illegible]
675	[illegible]	.4218	[illegible]	[illegible]	[illegible]
775	.2198	.2234	.2341	.4358	[illegible]
900		.2356	.2631	.4623	[illegible]

ARC11-716 IA14 C4+T12+S12N25+AT10 LEFT VERTICAL FB1-31

ALPHAO(8) = 4.190 BETAO (2) = -7.980

SECTION (1)LEFT VERTICAL DEPENDENT VARIABLE CP

Z/BV	.1580	.3160	.6000	.8400	.9250
X/CV					
.000	.0447	-.0837	-.1548	-.1253	-.2097
.025	.3717	.5620	.3555	.3176	.2888
.050	.3089	.5158	.3038	.2805	.2362
.150	.2511	.2155	.1865	.1626	.0661
.300	.1419	.1098	.0721	.0254	-.0600
.520	-.0686	-.1445	-.1720	-.2957	-.3101
.685	-.3169	-.4427	-.5726	-.7637	-.7451
.775	-.2660	-.2771	-.3434	-.4591	-.4865
.900		-.2388	-.2217	-.4497	.3545

ALPHAO(8) = 4.190 BETAO (3) = -5.960

SECTION (1)LEFT VERTICAL DEPENDENT VARIABLE CP

Z/BV	.1580	.3160	.6000	.8400	.9250
X/CV					
.000	.1301	.0482	-.0072	.0335	-.0278
.025	.2657	.2649	.5082	.2821	.2501
.050	.2125	.2322	.2492	.2498	.2019
.150	.1400	.1393	.1338	.1237	.0307
.300	.0606	.0473	.0311	-.0008	-.0881
.520	-.1192	-.1764	-.2024	-.3098	-.3416
.685	-.3193	-.4431	-.6185	-.8109	-.8143
.775	-.2599	-.3095	-.3510	-.4698	-.4316
.900		-.2415	-.2071	-.3635	-.2728

ALPHAO(8) = 4.190 BETAO (4) = -3.980

SECTION (1)LEFT VERTICAL DEPENDENT VARIABLE CP

Z/BV	.1580	.3160	.6000	.8400	.9250
X/CV					
.000	.1954	.1600	.1471	.2107	.1091
.025	.1081	.1198	.2185	.1868	.1290
.050	.0982	.1124	.1698	.1605	.1174
.150	.0310	.0508	.0752	.0474	.0396
.300	-.0299	-.0166	-.0115	-.0608	-.1267
.520	-.1705	-.1999	-.2316	-.3301	-.3626
.685	-.3071	-.4976	-.6950	-.8247	-.5798
.775	-.2620	-.3083	-.3824	-.4359	-.3015
.900		-.2563	-.2020	-.2016	-.1202

[illegible] DATA AT [illegible] LEFT VERTICAL (PB1 [illegible])

ALPHA = 4.040 BETA (5) = [illegible] 980

SECTION (1) LEFT VERTICAL DEPENDENT VARIABLE =

Z/BV	.1580	.3160	.6000	.8400	.9250
X/CV					
.000	.2538	.2375	.3108	.3289	.2713
.025	-.1092	-.1198	.0398	.0447	-.1085
.050	-.0370	-.0150	.0508	.0435	-.0179
.150	-.0855	-.0420	-.0087	-.0372	-.0929
.300	-.1[illegible]	-.0954	-.0730	-.1175	-.2580
.525	-.2[illegible]08	-.2468	-.2625	-.3426	-.3864
.685	-.2812	-.4906	-.8405	-.7997	-.6415
.775	.2255	-.3131	-.4472	.5645	-.2725
.900		-.2503	-.2213	.2611	-.1170

ALPHA(6) = 4.050 BETA(6) = .050

SECTION (1) LEFT VERTICAL DEPENDENT VARIABLE CP

Z/BV	.1580	.3160	.6000	.8400	.9250
X/CV					
.000	.2481	.2457	.3639	.3437	.3382
.025	-.3493	-.4238	-.3553	-.3625	-.4546
.050	-.1456	-.1[illegible]94	-.1233	-.1434	-.3518
.150	-.2120	.1655	-.1298	-.1351	.1937
.300	-.2325	-.1732	-.1531	-.1872	.2518
.525	-.2916	.2958	-.3237	-.3939	-.4177
.685	-.2811	-.5267	-.8404	-.5115	-.4072
.775	.2509	-.3217	-.4[illegible]	-.4107	-.2559
.900		-.2[illegible]	-.2558	-.2598	-.1171

ALPHA(8) = 4.050 BETA(7) = 2.050

SECTION (1) LEFT VERTICAL DEPENDENT VARIABLE CP

Z/BV	.1580	.3160	.6000	.8400	.9250
X/CV					
.000	.2363	.2577	.2615	.2228	.2502
.025	-.4164	-.7809	.6487	-.7088	-.7480
.050	-.2275	-.6576	-.6534	-.6706	-.7343
.150	-.2[illegible]	-.3935	-.3798	-.3848	-.5145
.300	-.4206	-.2518	-.2591	-.3450	-.2880
.525	-.5[illegible]9	.3348	-.3766	-.4498	-.4234
.685	-.2940	-.5248	-.7875	-.5104	-.3[illegible]
.775	-.2674	-.3866	-.4357	-.3208	-.2252
.900		-.2[illegible]	.2519	-.1924	-.3[illegible]

ARC11-716 IA14 O1+T12+S12N25+AT10 LEFT VERTICAL (RB1V31)

ALPHAO(8) = 4.030 BETAO (8) = 4.050

SECTION (1)LEFT VERTICAL DEPENDENT VARIABLE CP

Z/BV	.1580	.3160	.6000	.8400	.9250
X/CV					
.000	.2321	.1828	.0828	.0851	.1121
.025	-.5079	-.8635	-.8193	-.7888	-.9719
.050	-.4597	-.8692	-.8156	-.7559	-.9995
.150	-.3450	-.5885	-.7718	-.6795	-.7479
.300	-.4579	-.4832	-.6815	-.6903	-.6210
.520	-.3363	-.2638	-.3060	-.5229	-.4562
.685	-.2597	-.4155	-.7291	-.3490	-.2896
.775	-.2318	-.2923	-.3491	-.2802	-.1729
.900		-.2564	-.1753	-.1984	-.0999

ALPHAO(8) = 4.020 BETAO (9) = 6.070

SECTION (1)LEFT VERTICAL DEPENDENT VARIABLE CP

Z/BV	.1580	.3160	.6000	.8400	.9250
X/CV					
.000	.1498	.0602	-.0684	-.1426	-.0110
.025	-.6065	-.9685	-1.0500	-.7248	-.5466
.050	-.6004	-.9749	-1.0440	-.7119	-.5449
.150	-.6013	-.8826	-1.0140	-.6672	-.5826
.300	-.4774	-.6128	-.9174	-.5883	-.6132
.520	-.3759	-.3771	-.7604	-.5285	-.4902
.685	-.2806	-.4253	-.4932	-.4993	-.4110
.775	-.2543	-.2927	-.2921	-.4606	-.3784
.900		-.2510	-.1438	-.4046	-.3292

ALPHAO(8) = 4.010 BETAO (10) = 8.100

SECTION (1)LEFT VERTICAL DEPENDENT VARIABLE CP

Z/BV	.1580	.3160	.6000	.8400	.9250
X/CV					
.000	.0809	-.0753	-.2127	-.3098	-.1600
.025	-.6822	-1.0130	-1.1210	-.7224	-.6079
.050	-.7064	-1.0270	-1.1340	-.7173	-.5977
.150	-.6922	-1.0090	-1.1050	-.7124	-.6056
.300	-.4832	-.8585	-1.0460	-.6603	-.6093
.520	-.4166	-.5105	-.9396	-.5742	-.5034
.685	-.3008	-.4508	-.8828	-.5347	-.4394
.775	-.2525	-.3276	-.6326	-.5018	-.4273
.900		-.2441	-.2774	-.4725	-.4120

[illegible] LEFT VERTICAL (RB1V31)

ALPHA (5) = 4.000 BETAO (11) = 10.130

SECTION LEFT VERTICAL DEPENDENT VARIABLE CP

Z/BV	.1580	.3160	.6000	.8400	.9250
X/CV					
.000	-.0058	-.2262	-.3736	-.3479	-.2740
.025	-.7629	-1.0840	-1.0480	-.6540	-.5861
.050	-.8112	-1.0930	-1.0320	-.6745	-.5695
.150	-1.0980	-1.1200	-1.0220	-.6574	-.5637
.300	-.4895	-1.0860	-.9944	-.6340	-.6020
.520	-.4419	-.7404	-1.0360	-.5804	-.4944
.685	-.3156	-.4345	-.9346	-.5291	-.4665
.775	-.2668	-.3161	-.7968	-.5211	-.4520
.900		-.2556	-.5928	-.4967	-.4364

ALPHAO (9) = 6.000 BETAO (1) = -9.980

SECTION (1)LEFT VERTICAL DEPENDENT VARIABLE CP

Z/BV	.1580	.3160	.6000	.8400	.9250
X/CV					
.000	-.0661	-.2446	-.3859	-.3155	-.3776
.025	.4304	.4136	.3810	.3474	.3031
.050	.3357	.3708	.3490	.3181	.2542
.150	.2874	.2654	.2350	.1946	.0984
.300	.1884	.1579	.1236	.0614	-.5148
.520	-.0289	-.1203	-.1365	-.2733	-.2176
.685	-.3158	-.4132	-.4968	-.5212	-.5989
.775	-.2785	-.2364	-.2827	-.4008	-.4355
.900		-.2366	-.2466	-.4499	-.3835

ALPHAO (9) = 5.930 BETAO (2) = 7.960

SECTION (1)LEFT VERTICAL DEPENDENT VARIABLE CP

Z/BV	.1580	.3160	.6000	.8400	.9250
X/CV					
.000	.0179	-.1312	-.2177	-.1718	-.2425
.025	.3323	.3481	.3464	.3155	.2793
.050	.2507	.3059	.2993	.2821	.2269
.150	.2044	.2053	.1945	.1620	.0672
.300	.1169	.1059	.0779	.0376	-.4463
.520	-.0549	-.1408	-.1688	-.2838	-.2795
.685	-.3071	-.4357	-.5642	-.5983	-.6369
.775	-.2615	-.2899	-.3103	-.3902	-.4374
.900		-.2403	-.2130	-.4099	-.3117

ORIGINAL PAGE IS OF POOR QUALITY

ARC11-716 IA14 O1+T12+S12N25+AT10 LEFT VERTICAL (H91V31)

ALPHAO(9) = 5.980 BETAO (3) = -5.960

SECTION (1)LEFT VERTICAL DEPENDENT VARIABLE CP

X/CV \ Z/BV	.1580	.3160	.6000	.8400	.9250
.000	.1063	.0089	-.0464	-.0209	-.0804
.025	.2116	.2561	.2885	.2710	.2465
.050	.1537	.2192	.2393	.2359	.1967
.150	.1134	.1342	.1343	.1177	.0255
.300	.0457	.0468	.0367	-.0036	-.3796
.520	-.1105	-.1690	-.2015	-.3049	-.3482
.685	-.3106	-.4676	-.6010	-.7572	-.7644
.775	-.2539	-.3099	-.3502	-.4153	-.3858
.900		-.2382	-.2104	-.3375	-.2647

ALPHAO(9) = 5.950 BETAO (4) = -3.970

SECTION (1)LEFT VERTICAL DEPENDENT VARIABLE CP

X/CV \ Z/BV	.1580	.3160	.6000	.8400	.9250
.000	.1708	.1241	.1445	.1608	.0620
.025	.0758	.1273	.2160	.1875	.1290
.050	.0488	.1199	.1796	.1556	.1090
.150	.0102	.0558	.0758	.0418	-.0517
.300	-.0422	-.0173	-.0125	-.0653	-.3481
.520	-.1714	-.2002	-.2317	-.3404	-.3645
.685	-.3028	-.4758	-.6742	-.7024	-.5056
.775	-.2324	-.3028	-.3720	-.3524	-.2549
.900		-.2387	-.2012	-.1749	-.0897

ALPHAO(9) = 5.940 BETAO (5) = -1.960

SECTION (1)LEFT VERTICAL DEPENDENT VARIABLE CP

X/CV \ Z/BV	.1580	.3160	.6000	.8400	.9250
.000	.2146	.2175	.2813	.2896	.2319
.025	-.1806	-.0970	.0356	.0315	-.0627
.050	-.0875	-.0104	.0455	.0347	-.0261
.150	-.1198	-.0427	-.0086	-.0433	-.1085
.300	-.1316	-.0928	-.0749	-.1266	-.3131
.520	-.2183	-.2447	-.2606	-.3507	-.3907
.685	-.2624	-.4894	-.7992	-.7644	-.5423
.775	-.2250	-.3137	-.4242	-.4741	-.2366
.900		-.2517	-.2127	-.2138	-.1052

(RB1Y31)

ALPHA(7) = 5.640 BETA(6) = [illegible]

SECTION (1)LEFT VERTICAL DEPENDENT VARIABLE CP

Z/BV	.1580	.3160	.6000	.8400	.9250
X/CV					
.000	.2499	.2175	.3423	.3109	.3081
.025	-.3439	.4412	-.3631	-.[illegible]	-.4519
.050	-.1851	-.1726	-.1225	.1411	-.3577
.150	-.2233	-.1597	-.1349	-.1620	-.2096
.300	-.2255	-.1749	-.1482	-.2027	-.2956
.520	-.2745	-.2904	-.3260	-.3937	-.4201
.685	-.2758	-.5099	-.8032	-.5458	-.3579
.775	-.2462	-.3524	-.4666	-.3796	-.2437
.900		-.2592	-.2240	-.2230	-.1232

ALPHA(9) = 5.880 BETA(7) = 2.060

SECTION (1)LEFT VERTICAL DEPENDENT VARIABLE CP

Z/BV	.1580	.3160	.6000	.8400	.9250
X/CV					
.000	.2112	.2159	.2277	.1648	.2140
.025	-.4113	-.7806	-.6395	-.6726	-.7497
.050	-.2643	-.6539	-.6535	-.6426	-.7429
.150	-.2923	-.4042	-.3684	-.3942	-.4910
.300	-.4100	-.2485	-.2413	-.3418	-.3260
.520	-.3126	-.3288	-.3749	.4437	-.4220
.685	-.2820	-.4950	.7544	-.4834	.2591
.775	.2353	-.3574	-.4339	-.2752	-.1583
.900		-.2827	-.2497	-.1487	-.0790

ALPHA(9) = 5.9[illegible] BETA(8) = 4.070

SECTION (1)LEFT VERTICAL DEPENDENT VARIABLE CP

Z/BV	.1580	.3160	.6000	.8400	.9250
X/CV					
.000	.1755	.1403	.0445	.0149	.0575
.025	.5231	-.8769	-.7413	-.8021	-.9592
.050	-.4506	-.8749	-.7139	-.7913	-.9854
.150	-.3675	-.6035	-.7318	-.7217	-.7879
.300	-.4432	-.3970	-.6453	-.7182	-.3469
.520	-.3171	-.2792	-.3997	-.5276	-.4176
.685	-.2541	-.3990	-.7028	-.3396	-.2353
.775	-.2277	-.2887	-.3563	-.2646	-.1451
.900		-.2598	-.2014	-.1593	-.0774

ARC11-716 IA14 O1+T12+312N25+AT10 LEFT VERTICAL (RB1V31)

ALPHAO(9) = 5.990 BETAO (9) = 6.100

SECTION (1)LEFT VERTICAL DEPENDENT VARIABLE CP

X/CV \ Z/BV	.1580	.3160	.6000	.8400	.9250
.000	.1302	.0257	-.1153	-.1892	-.0599
.025	-.6234	-.9785	-1.0080	-.7307	-.5562
.050	-.6237	-.9852	-1.0060	-.7332	-.5460
.150	-.4950	-.8966	-.9749	-.6840	-.5151
.300	-.5090	-.5654	-.9036	-.6172	-.3907
.520	-.3413	-.3256	-.7453	-.5261	-.4805
.685	-.2473	-.3387	-.4742	-.5049	-.4410
.775	-.2441	-.2757	-.2281	-.4747	-.3924
.900		-.2442	-.1267	-.4250	-.3322

ALPHAO(9) = 6.020 BETAO (10) = 8.130

SECTION (1)LEFT VERTICAL DEPENDENT VARIABLE CP

X/CV \ Z/BV	.1580	.3160	.6000	.8400	.9250
.000	.0399	-.1114	-.2708	-.3661	-.1987
.025	-.7435	-1.0470	-1.0490	-.7068	-.5698
.050	-.7754	-1.0640	-1.0520	-.6973	-.5435
.150	-.7270	-1.0490	-1.0190	-.6625	-.5613
.300	-.5450	-.8464	-1.0040	-.5985	-.4319
.520	-.3487	-.3898	-1.0500	-.5445	-.4673
.685	-.2647	-.3592	-.9479	-.5102	-.4196
.775	-.2647	-.2768	-.4801	-.5046	-.4048
.900		-.2513	-.1852	-.4897	-.4090

ALPHAO(9) = 5.990 BETAO (11) = 10.150

SECTION (1)LEFT VERTICAL DEPENDENT VARIABLE CP

X/CV \ Z/BV	.1580	.3160	.6000	.8400	.9250
.000	-.0343	-.2666	-.4341	-.4381	-.3086
.025	-.8770	-1.1070	-1.0570	-.5855	-.5359
.050	-.8733	-1.1140	-1.0580	-.6114	-.5070
.150	-1.0810	-1.1540	-1.0230	-.5714	-.4591
.300	-.5478	-1.0830	-1.0250	-.5457	-.4258
.520	-.3191	-.5783	-1.1500	-.5207	-.4809
.685	-.2834	-.3282	-1.0440	-.5389	-.4657
.775	-.2614	-.3129	-.8344	-.5532	-.4503
.900		-.2645	-.4800	-.5227	-.4417

[illegible] EFT VERTICAL [illegible]

ALPHA [illegible] = [illegible] BETA [illegible] = [illegible]

SECTION [illegible] LEFT VERTICAL DEPENDENT VARIABLE CP

Z/BV	.1580	.3160	.6000	.8400	.9250
X/CV					
.000	-.0829	.2730	-.4268	-.3602	-.4130
.025	.3653	.3787	.3588	.3287	.2888
.050	.2641	.3418	.3240	.3031	.2468
.150	[illegible]	.2408	.2202	.2014	.1925
.300	.1379	.1425	.1242	.0668	-.2307
.520	-.0538	-.1083	-.1285	-.2526	-.2026
.685	-.3085	-.4207	-.4922	-.4365	-.5122
.775	.2743	-.2428	-.2756	-.3516	-.4068
.900		-.2415	-.2421	-.3849	-.3743

ALPHA (10) = 8.000 BETA (21) = 7.950

SECTION (11) LEFT VERTICAL DEPENDENT VARIABLE CP

Z/BV	.1580	.3160	.6000	.8400	.9250
X/CV					
.000	.0285	-.1545	-.2586	-.2368	-.2935
.025	.2723	.3188	.3270	.3025	.2670
.050	.1843	.2799	.2822	.2684	.2187
.150	.1547	.1420	.1730	.1594	.0597
.300	.0718	[illegible]	[illegible]	[illegible]	-.2808
.520	-.0831	.1339	[illegible]	.2801	-.2591
.685	-.3031	.4435	-.5465	[illegible]	.5749
.775	-.2470	.2748	[illegible]	[illegible]	[illegible]
.900		-.2391	[illegible]	[illegible]	[illegible]

ALPHA (101) = 7.980 BETA (31) = -9.950

SECTION (1) LEFT VERTICAL DEPENDENT VARIABLE CP

Z/BV	.1580	.3160	.6000	.8400	.9250
X/CV					
.000	.1085	.0186	-.0760	-.0531	-.1328
.025	.1565	.2308	.2895	.2557	.2297
.050	.0871	.2018	.2383	.2213	.1762
.150	[illegible]	.1186	.1250	.1066	.0082
.300	[illegible]	[illegible]	.0394	.0131	-.3309
.520	.1258	-.1640	.2039	-.3117	-.3473
.685	-.3076	-.4643	-.5842	-.6045	[illegible]
.775	-.2482	-.2924	-.3269	-.3789	-.3182
.900		-.2422	.2049	-.2696	-.1553

ORIGINAL PAGE IS OF POOR QUALITY

ARC11-716 IA14 O4+T12+S12N25+AT10 LEFT VERTICAL (RB1V51)

ALPHAO(10) = 7.940 BETAO (4) = -3.870

SECTION (1)LEFT VERTICAL DEPENDENT VARIABLE CP

Z/BV	.1580	.3160	.6000	.8400	.9250
X/CV					
.000	.1558	.1013	.1231	.1238	.0414
.025	-.0064	.0270	.1966	.1658	.1248
.050	-.0236	.0881	.1579	.1405	.0993
.150	-.0276	.0400	.0614	.0395	-.0548
.300	-.0639	-.0295	-.0178	-.0748	-.3842
.525	-.1705	-.2055	-.2348	-.5488	-.3748
.685	-.5051	-.4874	-.6440	-.7025	-.4734
.775	-.2368	-.5094	-.3644	-.5463	-.2490
.900		-.2354	-.2112	-.1658	-.0828

ALPHAO(10) = 7.940 BETAO (5) = -1.980

SECTION (1)LEFT VERTICAL DEPENDENT VARIABLE CP

Z/BV	.1580	.3160	.6000	.8400	.9250
X/CV					
.000	.1885	.1848	.2802	.2665	.2117
.025	-.1556	-.1059	.0191	.0325	-.0696
.050	-.1188	-.0229	.0383	.0303	-.0275
.150	-.1102	-.0429	-.0202	-.0391	-.1189
.300	-.1549	-.0870	-.0754	-.1249	-.4294
.525	-.2116	-.2309	-.2721	-.3600	-.3847
.685	-.2633	-.4640	-.7239	-.7459	-.4609
.775	-.2200	-.3014	-.3894	-.4164	-.2219
.900		-.2405	-.1971	-.1942	-.0868

ALPHAO(10) = 7.880 BETAO (6) = .030

SECTION (1)LEFT VERTICAL DEPENDENT VARIABLE CP

Z/BV	.1580	.3160	.6000	.8400	.9250
X/CV					
.000	.1945	.2297	.3587	.2954	.2856
.025	-.2534	-.3772	-.3755	-.3532	-.4407
.050	-.1854	-.1785	-.1308	-.1287	-.3405
.150	-.1664	-.1563	-.1271	-.1532	-.2121
.300	-.2012	-.1648	-.1550	-.1897	-.4769
.525	.2555	-.2805	-.5163	-.5903	-.4131
.685	-.2682	-.4340	-.7047	-.5608	-.5244
.775	-.2216	-.2989	-.4439	-.3540	-.2168
.900		-.2331	-.2088	-.1894	-.0891

[illegible] VERTICAL [illegible]

ALPHA(10) = [illegible] BETA(10) = [illegible]

SECTION 1 LEFT VERTICAL DEPENDENT VARIABLE CP

Z/H	.1580	.3160	.6000	.8400	.9250
Y/C					
[illegible]	1084	1835	.1998	.1595	[illegible]
[illegible]	-.3489	.6591	-.6813	-.6686	[illegible]
[illegible]	-.2630	-.5210	-.6915	-.6420	[illegible]
[illegible]	-.2812	[illegible]	-.3599	-.4227	[illegible]
[illegible]	[illegible]	-.2588	-.2580	.3487	[illegible]
[illegible]	[illegible]	-.3293	-.3886	-.4322	-.4140
[illegible]	[illegible]	-.4604	-.6842	-.4817	-.2532
[illegible]	-.2442	-.3154	-.4102	-.2648	.1563
[illegible]		-.2638	-.2465	-.1522	-.0594

ALPHA(10) = 8.010 BETA(10) = 4.09[illegible]

SECTION 1 LEFT VERTICAL DEPENDENT VARIABLE CP

Z/H	.1580	.3160	.6000	.8400	.9250
Y/C					
[illegible]	[illegible]	[illegible]	.0279	-.0380	.0146
[illegible]	[illegible]	[illegible]	-.7130	-.7609	.8949
[illegible]	[illegible]	[illegible]	-.7130	.7545	-.8815
[illegible]	[illegible]	[illegible]	[illegible]	[illegible]	.7973
[illegible]	[illegible]	.2957	.5999	.7127	-.5084
[illegible]	-.5[illegible]5	[illegible]	-.4514	-.4336	.3723
[illegible]	-.2468	[illegible]	.5943	.5225	-.1973
[illegible]	.2163	.2741	.3637	.2425	[illegible]
[illegible]		[illegible]	[illegible]	.1475	[illegible]

ALPHA(10) = [illegible] BETA(10) = 6.12[illegible]

SECTION 1 LEFT VERTICAL DEPENDENT VARIABLE CP

Z/H	.1580	.3160	.6000	.8400	.9250
Y/C					
[illegible]	[illegible]	[illegible]	.1794	.2263	.1178
[illegible]	-.8141	-1.0030	-.8742	-.8309	-.8702
[illegible]	[illegible]	[illegible]	-.8782	-.8253	-.6829
[illegible]	.4258	[illegible]	.8551	.7958	[illegible]
[illegible]	.5265	.4970	.8904	.7556	[illegible]
[illegible]	[illegible]	[illegible]	[illegible]	[illegible]	[illegible]
[illegible]	.2495	.5110	.4930	.4732	[illegible]
[illegible]	.2548	.2644	.2556	.4151	[illegible]
[illegible]		.2444	.1455	.3547	[illegible]

ARC11-718 TA14 C4+T12+S12N25+AT10 LEFT VERTICAL (RB1V31)

ALPHAC(10) = 7.980 BETAO (10) = 8.120

SECTION (1)LEFT VERTICAL DEPENDENT VARIABLE CP

Z/BV	.1580	.3160	.6000	.8400	.9250
X/CV					
.000	.0238	-.1497	-.3337	-.4380	-.2496
.025	-.7274	-1.0820	-.9658	-.7427	-.5445
.050	-.7428	-1.0990	-.9548	-.7358	-.5563
.150	-.5589	-1.0730	-.9449	-.7110	-.5255
.300	-.5891	-.6857	-.9876	-.6612	-.4568
.520	-.3195	-.2640	-1.0820	-.5708	-.4516
.685	-.2416	-.2717	-.7960	-.5372	-.4176
.775	-.2553	-.2677	-.3193	-.5441	-.3915
.900		-.2600	-.1856	-.5188	-.4086

ALPHAC(10) = 7.950 BETAO (11) = 10.200

SECTION (1)LEFT VERTICAL DEPENDENT VARIABLE CP

Z/BV	.1580	.3160	.6000	.8400	.9250
X/CV					
.000	-.0590	-.5035	.5016	.5767	-.3578
.025	-.8670	-1.1700	-.9722	-.7035	-.4819
.050	-.9239	-1.1790	-.9950	-.7138	-.4670
.150	-.5979	-1.2220	-.9803	-.6753	-.4614
.300	-.6333	-.9818	-1.0280	-.6158	-.4404
.520	-.3296	-.2602	-1.3010	-.5894	-.4624
.685	-.2625	-.2953	-.9064	-.5865	-.4641
.775	-.2738	-.2936	-.5544	-.5972	-.4745
.900		-.2933	-.2945	-.5707	-.5074

ALPHAC(11) = 9.990 BETAO (1) = -9.930

SECTION (1)LEFT VERTICAL DEPENDENT VARIABLE CP

Z/BV	.1580	.3160	.6000	.8400	.9250
X/CV					
.000	-.0393	-.2979	-.4753	-.4394	-.4659
.025	.2540	.3510	.3359	.3097	.2714
.050	.1736	.3092	.3069	.2880	.2382
.150	.1364	.2181	.2109	.1954	.0909
.300	.0516	.1238	.1238	.0723	-.1901
.520	-.0958	-.1008	-.1277	-.2394	-.1807
.685	-.3034	-.4189	-.4508	-.3605	-.4725
.775	-.2598	-.2298	-.2475	-.3132	-.3661
.900		-.2234	-.2346	-.3238	-.3248

[illegible] [illegible] [illegible] [

ARC11-7 & IA14 C6+T12+S12N25+AT10 LEFT VERTICAL (RB1V31)

ALPHAO(11) = 9.940 BETAO (5) = -1.960

SECTION (1)LEFT VERTICAL DEPENDENT VARIABLE CP

Z/BV	.1580	.3180	.6000	.8400	.9250
X/CV					
.000	.1695	.1706	.2442	.2334	.1792
.025	-.1909	-.1523	.0175	.0258	-.0594
.050	-.1591	-.0415	.0308	.0155	-.0302
.150	-.1282	-.0641	-.0229	-.0486	-.1214
.300	-.1532	-.1031	-.0697	-.1270	-.1322
.520	-.2276	.2445	-.2755	-.3674	-.3900
.685	-.2676	-.4585	-.6755	-.7006	-.4585
.775	-.2244	-.2584	-.3672	-.3498	-.2101
.900		-.2316	-.1901	-.1674	-.0588

ALPHAO(11) = 9.880 BETAO (6) = .040

SECTION (1)LEFT VERTICAL DEPENDENT VARIABLE CP

Z/BV	.1580	.3180	.6000	.8400	.9250
X/CV					
.000	.1871	.1981	.3016	.2758	.2669
.025	-.2713	-.3621	-.3467	-.3477	-.4197
.050	-.1882	-.1886	-.1403	-.1238	-.3191
.150	-.1803	-.1530	-.1373	-.1573	-.2068
.300	-.1988	.1675	-.1515	-.1928	-.1475
.520	-.2529	-.2725	-.3233	-.3871	-.4078
.685	-.2477	-.4246	-.6576	-.6123	-.3301
.775	-.2250	-.2919	-.3897	.3370	-.1944
.900		-.2304	-.19[illegible]	-.1512	-.0606

ALPHAO(11) = 9.880 BETAO (7) = 2.070

SECTION (1)LEFT VERTICAL DEPENDENT VARIABLE CP

Z/BV	.1580	.3180	.6000	.8400	.9250
X/CV					
.000	.1540	.1677	.1888	.1385	.1688
.025	-.3143	-.3708	-.6705	-.6809	-.7059
.050	-.2474	-.4334	-.6419	-.6284	-.7013
.150	-.2262	-.2584	-.3257	-.3868	-.4639
.300	-.2595	-.2407	-.2317	-.3038	-.1909
.520	-.2469	-.3119	-.3928	-.4249	-.4101
.685	-.2633	-.4319	-.6010	-.4898	-.2358
.775	-.2291	-.2922	-.3580	-.2338	-.1534
.900		-.2352	-.2224	-.1003	-.0281

RB1-31

BETAC = 0.150

SECTION (1) LEFT VERTICAL — DEPENDENT VARIABLE P

Z/B	.1580	.3160	.6000	.8400	.9200
X/C					
.000	.1580	.0776	-.0106	-.0736	-.0149
.025	-.3920	-.7897	-.7448	-.7551	.8912
.050	-.5435	-.7480	-.7458	.7448	.8787
.150	-.3197	-.4849	-.6661	-.7156	-.7941
.300	-.4158	-.2934	-.4925	-.7107	[illegible]
.520	-.3168	-.3256	-.4355	-.5285	[illegible]
.685	-.2458	-.4213	-.5819	-.3185	-.1896
.775	.2321	-.2976	-.3588	-.2902	-.1152
.900		-.2817	-.2007	-.1268	-.0816

ALPHAC (1) = 0.080 BETAC (1) = 0.150

SECTION (1) LEFT VERTICAL — DEPENDENT VARIABLE CP

Z/B	.1580	.3160	.6000	.8400	.9200
X/C					
.000	.3643	-.0268	-.2236	-.2632	-.1885
.025	-.9199	-.9604	-.8638	-.8460	-.6688
.050	.4817	-.9494	-.8532	.8437	-.6554
.150	-.5641	-.7648	-.8455	.8141	-.6625
.300	-.5079	-.4252	-.8214	-.7775	-.5119
.520	-.3591	.2827	.5715	-.5729	-.4167
.685	-.8460	.5197	-.4649	-.4491	-.3711
.775	-.2335	-.2460	-.2855	.3946	-.3254
.900		-.2591	-.1529	-.3172	-.2664

ALPHAC (1) = 10.05 BETAC (1) = 0.170

SECTION (1) LEFT VERTICAL — DEPENDENT VARIABLE CP

Z/B	.1580	.3160	.6000	.8400	.9200
X/C					
.000	.9227	.1625	-.4022	-.4875	.5648
.025	.8648	.0950	.9535	.7781	.5693
.050	.5965	[illegible]	.9431	.7751	.5747
.150	[illegible]	[illegible]	.9394	-.7531	.5416
.300	[illegible]	.5463	-.8740	-.7152	[illegible]
.520	[illegible]	.2626	.8145	.6093	[illegible]
.685	.2841	.2816	.5705	-.5553	[illegible]
.775	.2498	[illegible]	.2638	.5128	[illegible]
.900		.2051	.1814	.5108	[illegible]

APC11-718 IA14 O6+T12+S12N25+AT10 LEFT VERTICAL (RB1V31)

ALPHA(11) = 10.090 BETA(11) = 10.230

SECTION (1) LEFT VERTICAL DEPENDENT VARIABLE CP

Z/BV	.1500	.3100	.0000	.0400	.0250
X/CV					
.000	-.0244	-.3302	-.9001	-.0202	-.3980
.025	-.7349	-1.1710	-.0034	-.7019	-.5033
.050	-.7381	-1.1820	-.9705	-.0932	-.4894
.100	-.5372	-1.2140	-.0034	-.6783	-.4826
.300	-.6642	-.0000	-1.0390	-.0083	-.3632
.500	-.3656	-.2859	-1.2180	-.0014	-.4971
.675	-.2656	-.3129	-.6970	-.6199	-.4441
.775	-.2767	-.2990	-.4200	-.6082	-.4568
.900		-.2906	-.2757	-.5696	-.5081

[illegible] LEFT VERTICAL (RB1V32 [illegible] 17 APR 76)

REFERENCE DATA

SREF =	2.4210 SQ FT.	XMRP =	23.5800 INCHES		
LREF =	38.7090 INCHES	YMRP =	.0000 INCHES		
BREF =	38.7090 INCHES	ZMRP =	.0000 INCHES		
SCALE =	.0300 SCALE				

PARAMETRIC DATA

MACH =	1.100	ELEVON =	.000
RUDDER =	.000	SPOBRK =	.000

ALPHAO(1) = 10.240 BETAO (1) = -0.900

SECTION (1)LEFT VERTICAL DEPENDENT VARIABLE CP

Z/BV	.1580	.3160	.6000	.8400	.9250
X/CV					
.000	.3676	.2791	.3348	.3899	.2839
.025	.7318	.7490	.7298	.6855	.6539
.050	.7178	.6965	.6765	.6462	.5993
.150	.6183	.5827	.5484	.5112	.4209
.300	.4996	.4563	.4368	.3754	.0000
.520	.2814	.2042	.2042	.0921	-.0095
.685	-.3537	-.5773	-.5600	-.6276	-.6185
.775	-.2793	-.2983	-.4880	-.5640	-.5868
.900		-.2580	-.4092	-.5467	-.5553

ALPHAO(1) = -10.220 BETAO (2) = -7.890

SECTION (1)LEFT VERTICAL DEPENDENT VARIABLE CP

Z/BV	.1580	.3160	.6000	.8400	.9250
X/CV					
.000	.4571	.3888	.4480	.5063	.4096
.025	.7134	.6751	.6625	.6266	.5333
.050	.6413	.6278	.6094	.5878	.5506
.150	.5468	.5156	.4876	.4613	.3746
.300	.4352	.3998	.3844	.5374	.0000
.520	.2386	.1705	.1677	.0759	-.0608
.685	-.3759	-.5762	-.5934	-.6291	-.6454
.775	-.3008	-.3866	-.5394	-.5807	-.6225
.900		-.2883	-.4716	-.5750	-.5934

ORIGINAL PAGE IS
OF POOR QUALITY

ARC11-716 TA14 O1+T12+S12N25+AT10 LEFT VERTICAL (RB1V32)

ALPHAO(1) = -10.220 BETAO (3) = -5.900

SECTION (1)LEFT VERTICAL DEPENDENT VARIABLE CP

Z/BV	.1580	.3160	.6000	.8400	.9250
X/CV					
.000	.5457	.5025	.5563	.5995	.5155
.025	.6136	.5707	.5773	.5537	.5025
.050	.5553	.5367	.5320	.5200	.4869
.150	.4692	.4426	.4220	.4043	.3256
.300	.3697	.3402	.3336	.2927	.0000
.520	.1870	.1322	.1305	.0521	-.0812
.685	-.3790	-.6198	-.6220	-.6514	-.6636
.775	-.3213	-.4599	-.5772	-.6140	-.6495
.900		-.3102	-.5239	-.6122	-.6263

ALPHAO(1) = -10.230 BETAO (4) = -3.930

SECTION (1)LEFT VERTICAL DEPENDENT VARIABLE CP

Z/BV	.1580	.3160	.6000	.8400	.9250
X/CV					
.000	.6126	.5901	.6415	.6697	.6077
.025	.4931	.4250	.4491	.4496	.3683
.050	.4675	.4291	.4352	.4322	.3971
.150	.3814	.3624	.3500	.3346	.2653
.300	.2919	.2800	.2731	.2442	.0000
.520	.1465	.0814	.0887	.0521	-.0801
.685	-.4153	-.6444	-.6351	-.6783	-.6701
.775	-.3443	-.5471	-.6054	-.6318	-.6678
.900		-.3545	-.5696	-.6437	-.6415

ALPHAO(1) = -10.230 BETAO (5) = -1.940

SECTION (1)LEFT VERTICAL DEPENDENT VARIABLE CP

Z/BV	.1580	.3160	.6000	.8400	.9250
X/CV					
.000	.6508	.6393	.6988	.7100	.6758
.025	.3310	.2113	.2484	.2781	.1633
.050	.3713	.3309	.3002	.3025	.2379
.150	.2974	.2685	.2611	.2465	.1777
.300	.2097	.2105	.2080	.1832	.0000
.520	.1000	.0394	.0318	.0088	-.0811
.685	-.4295	-.6809	-.6583	-.6976	-.6631
.775	-.3616	-.5567	-.6311	-.6532	-.6660
.900		-.3885	-.6264	-.6622	-.6172

ALPHA(1) = -10.240 BETA(6) = [illegible]

SECTION (1)LEFT VERTICAL DEPENDENT VARIABLE CP

X/CV \ Z/BV	.1580	.3160	.6000	.8400	.9250
.000	.6732	.6559	.7231	.7120	.7034
.025	.1367	-.0596	-.0921	-.1222	-.1491
.050	.2875	.1535	-.0087	.0986	-.1234
.150	.2192	.1313	.1644	.1353	.1048
.300	.0950	.1195	.1468	.1140	.0000
.520	.0429	.0038	-.0099	-.0192	-.0873
.685	-.4297	-.7024	-.6753	-.7023	-.6580
.775	-.3861	-.5896	-.6610	-.6773	-.6751
.900		-.4252	-.6529	-.6755	-.6183

ALPHA(1) = -10.250 BETA(7) = 2.040

SECTION (1)LEFT VERTICAL DEPENDENT VARIABLE CP

X/CV \ Z/BV	.1580	.3160	.6000	.8400	.9250
.000	.6556	.6470	.6653	.6375	.6633
.025	.0060	-.2803	-.5701	-.6018	-.4050
.050	.0821	-.2303	-.5261	-.5712	-.3978
.150	.1687	.0483	.0079	-.0383	-.1779
.300	.0267	.0015	.0417	.0023	.0000
.520	-.0347	-.0615	-.0627	-.0604	-.0738
.685	-.4617	-.7269	-.6973	-.7118	-.6339
.775	-.4119	-.5995	-.6675	-.6648	-.6696
.900		-.4330	-.6712	-.6755	-.6204

ALPHA(1) = -10.260 BETA(8) = 4.030

SECTION (1)LEFT VERTICAL DEPENDENT VARIABLE CP

X/CV \ Z/BV	.1580	.3160	.6000	.8400	.9250
.000	.6169	.5952	.5849	.5511	.5923
.025	-.0720	-.3611	-.5685	-.7870	-.8369
.050	-.1157	-.3403	-.6007	-.7944	-.8124
.150	.0949	-.1391	-.5261	-.6242	-.6482
.300	-.0226	-.0844	-.1880	-.1902	.0000
.520	-.1074	-.1232	-.1846	-.1303	-.1159
.685	-.4713	-.7341	-.6885	-.6981	-.6484
.775	-.4271	-.6347	-.6869	-.6892	-.6834
.900		-.4624	-.6923	-.6780	-.6288

ARC11-716 IA14 O1+T12+S12N25+AT10 LEFT VERTICAL (RB1V32)

ALPHAO(1) = -10.250 BETAO (9) = 6.090

SECTION (1)LEFT VERTICAL DEPENDENT VARIABLE CP

Z/BV	.1580	.3160	.6000	.8400	.9250
X/CV					
.000	.5525	.5014	.4839	.4404	.5078
.025	-.1490	-.4884	-.6142	-.8624	-.9072
.050	-.1811	-.4496	-.6169	-.8910	-.9324
.150	-.1179	-.3591	-.5478	-.7590	-.7679
.300	-.0605	-.2350	-.4270	-.4714	.0000
.520	-.1691	-.2053	-.4215	-.3999	-.3548
.685	-.4921	-.7529	-.7293	-.8192	-.7500
.775	-.4147	-.6035	-.7274	-.8123	-.7827
.900		-.4773	-.6429	-.6024	-.7416

ALPHAO(1) = -10.240 BETAO (10) = 8.120

SECTION (1)LEFT VERTICAL DEPENDENT VARIABLE CP

Z/BV	.1580	.3160	.6000	.8400	.9250
X/CV					
.000	.4684	.3773	.3740	.3273	.4073
.025	-.2564	-.5229	-.6823	-.8232	-.9301
.050	-.2941	-.5287	-.6954	-.8952	-.9637
.150	-.4208	-.4900	-.6536	-.6912	-.8503
.300	-.0321	-.3960	-.5819	-.6118	.0000
.520	-.2103	-.3257	-.6005	-.5695	-.4918
.685	-.4947	-.7196	-.8362	-.8887	-.7991
.775	-.4137	-.5739	-.7543	-.5921	-.6782
.900		-.5229	-.5791	-.5001	-.4903

ALPHAO(1) = -10.230 BETAO (11) = 10.110

SECTION (1)LEFT VERTICAL DEPENDENT VARIABLE CP

Z/BV	.1580	.3160	.6000	.8400	.9250
X/CV					
.000	.3750	.2339	.2380	.1935	.3011
.025	-.3329	-.5864	-.7296	-.8019	-.8416
.050	-.3685	-.6012	-.7408	-.8563	-.8995
.150	-.6218	-.6247	-.7145	-.7332	-.8480
.300	-.0574	-.5780	-.6774	-.6777	.0000
.520	-.2499	-.5048	-.7150	-.5759	-.5158
.685	-.4988	-.7859	-.7853	-.8075	-.6632
.775	-.4296	-.6570	-.6929	-.5161	-.5215
.900		-.5562	-.6174	-.4616	-.4958

(RB1V32)

ALPHAO (1) = -5.190 BETAO (1) = -5.971

SECTION (1)LEFT VERTICAL DEPENDENT VARIABLE CP

Z/BV	.1580	.3160	.6000	.8400	.9250
X/CV					
.000	.3495	.2879	.2918	.3486	.2444
.025	.7814	.7153	.6861	.6538	.6254
.050	.6852	.6026	.6445	.6159	.5727
.150	.5484	.5544	.5201	.4894	.3961
.300	.4724	.4281	.4141	.3589	.0000
.520	.2608	.1836	.1859	.0847	-.0321
.685	-.3441	-.3457	-.5759	-.6212	-.6229
.775	-.2744	-.3026	-.5014	-.5537	-.5921
.900		-.2680	-.4149	-.5368	-.5877

ALPHAO (2) = -8.200 BETAO (2) = -7.960

SECTION (1)LEFT VERTICAL DEPENDENT VARIABLE CP

Z/BV	.1580	.3160	.6000	.8400	.9250
X/CV					
.000	.4397	.3715	.4145	.4589	.3669
.025	.6417	.6418	.6289	.5976	.5640
.050	.6051	.5903	.5783	.5605	.5255
.150	.5136	.4880	.4585	.4376	.3519
.300	.4088	.3779	.3620	.3181	.0000
.520	.2157	.1538	.1489	.0632	-.0794
.685	-.3617	-.5858	-.5995	-.6372	-.6442
.775	-.2935	-.3753	-.5427	-.5828	-.6234
.900		-.2913	-.4702	-.5762	-.6120

ALPHAO (2) = 8.210 BETAO (3) = -5.960

SECTION (1)LEFT VERTICAL DEPENDENT VARIABLE CP

Z/BV	.1580	.3160	.6000	.8400	.9250
X/CV					
.000	.5238	.4799	.5220	.5579	.4732
.025	.5766	.5303	.5378	.5222	.4745
.050	.5187	.4999	.4992	.4913	.4608
.150	.4305	.4089	.3918	.3798	.3026
.300	.3347	.3105	.3057	.2743	.0000
.520	.1649	.1134	.1109	.0428	-.0955
.685	.3747	-.6343	-.6275	-.6504	-.6603
.775	-.3182	-.4375	.5823	-.6154	-.6470
.900		-.3175	-.5293	-.6143	-.6319

ORIGINAL PAGE IS
OF POOR QUALITY

ARC11-716 IA14 O1+(12+312N25+AT10 LEFT VERTICAL (RB1V32)

ALPHAO(2) = -8.220 BETAO (4) = -1.980

SECTION (1)LEFT VERTICAL DEPENDENT VARIABLE CP

Z/BV	.1580	.3160	.6000	.8400	.9250
X/CV					
.000	.6299	.6079	.6627	.6707	.6365
.025	.3018	.1730	.2278	.2627	.1557
.050	.3444	.2901	.2835	.2880	.2273
.150	.2642	.2359	.2393	.2315	.1664
.300	.1722	.1853	.1885	.1631	.0000
.520	.0839	.0254	.0148	.0017	-.0941
.685	-.4096	-.6805	-.6606	-.6893	-.6619
.775	-.3529	-.5312	-.6312	-.6506	-.6660
.900		-.3914	-.6257	-.6633	-.6260

ALPHAO(2) = -8.150 BETAO (5) = .010

SECTION (1)LEFT VERTICAL DEPENDENT VARIABLE CP

Z/BV	.1580	.3160	.6000	.8400	.9250
X/CV					
.000	.6421	.6206	.6769	.6735	.6702
.025	.1151	-.0841	-.1200	-.1328	-.1738
.050	.2644	.1276	-.0681	.0707	-.1366
.150	.1965	.0871	.1382	.1187	.0824
.300	.0523	.0718	.1282	.0893	.0000
.520	.0125	-.0111	-.0242	-.0292	-.1030
.685	-.4130	-.7017	-.6747	-.7007	-.6592
.775	-.3694	-.5619	-.6607	-.6744	-.6767
.900		-.4066	-.6507	-.6765	-.6292

ALPHAO(2) = -8.190 BETAO (6) = 2.040

SECTION (1)LEFT VERTICAL DEPENDENT VARIABLE CP

Z/BV	.1580	.3160	.6000	.8400	.9250
X/CV					
.000	.6279	.6135	.6296	.5982	.6203
.025	-.0112	-.2888	-.5845	-.6170	-.4169
.050	.0594	-.2266	-.5487	-.6046	-.4131
.150	.1450	.0191	-.0163	-.0840	-.2003
.300	-.0055	-.0326	.0187	-.0129	.0000
.520	-.0691	-.0836	-.0783	-.0825	-.0900
.685	-.4433	-.7283	-.6842	-.7032	-.6293
.775	-.4015	-.5615	-.6711	-.6813	-.6680
.900		-.4190	-.6711	-.6775	-.6246

[illegible] LEFT VERTICAL [illegible]

ALPHA(2) = 8.240 BETA(2) = 4.[illegible]

SECTION (1) LEFT VERTICAL DEPENDENT VARIABLE [illegible]

Z/B	.1580	.3160	.6000	.8400	.9250
X/C					
.000	.5903	.5899	.5487	.5098	.5559
.025	-.0691	-.5712	-.5682	-.7979	-.8478
.050	-.1329	-.3566	-.8245	-.[illegible]68	-.6266
.150	.0734	-.1516	-.3397	-.8405	-.6650
.300	-.0510	-.1103	-.2069	-.1908	.0000
.520	-.1431	-.1494	-.1995	-.1509	-.1351
.685	-.4208	-.7350	-.8728	-.7226	-.6601
.775	-.3790	-.5501	-.7015	-.7040	-.8952
.900		-.4301	-.6963	-.6927	-.6455

ALPHA(2) = -8.220 BETA(2) = 6.070

SECTION (1) LEFT VERTICAL DEPENDENT VARIABLE CP

Z/B	.1580	.3160	.6000	.8400	.9250
X/C					
.000	.5501	.4849	.4545	.4077	.4680
.025	-.1635	-.4709	-.6248	-.8585	-.9047
.050	-.1997	-.4368	-.6242	-.6896	-.9286
.150	-.1337	-.3729	-.5496	-.7572	-.7718
.300	-.0811	-.2468	-.4297	-.4677	.0000
.520	-.1980	-.2177	-.4149	-.4056	-.3491
.685	-.4654	-.7478	-.7265	-.8242	-.7492
.775	-.3935	-.5537	-.727[illegible]	-.8072	-.7807
.900		-.4462	-.5675	-.5395	-.5[illegible]9

ALPHA(2) = [illegible] BETA(2) = [illegible]

SECTION (1) LEFT VERTICAL DEPENDENT VARIABLE CP

Z/B	.1580	.3160	.6000	.8400	.9250
X/C					
.000	.4493	.3800	.3337	.2880	.3668
.025	-.8832	.5318	.6883	-.8157	-.9218
.050	-.2[illegible]54	-.5321	-.6971	-.8791	.9620
.150	-.4228	-.4984	-.8610	-.6877	-.8521
.300	.0520	.4087	-.5862	-.8124	.0000
.520	-.2391	-.3349	-.6025	-.5855	-.4[illegible]8
.685	-.4922	.6979	-.9284	.8719	-.7[illegible]
.775	.414[illegible]	-.5597	-.7379	-.5751	-.5860
.900		.5172	-.5723	-.5125	-.4675

ARC11-716 IA14 OL+T12+S12N25+AT10 LEFT VERTICAL (PB1V32)

ALPHAO(2) = -8.240 BETAO (10) = 10.100

SECTION (1)LEFT VERTICAL DEPENDENT VARIABLE CP

Z/BV	.1580	.3160	.6000	.8400	.9250
X/CV					
.000	.3656	.2244	.2014	.1548	.2617
.025	-.3486	-.6009	-.7408	-.8084	-.8618
.050	-.5946	-.8079	-.7512	-.8579	-.9038
.150	-.6213	-.6259	-.7228	-.7447	-.8488
.300	-.0686	-.5821	-.8872	-.6843	.0000
.520	-.2722	-.5038	-.7234	-.5699	-.5200
.685	-.4992	-.7653	-.7730	-.5841	-.6230
.775	-.4113	-.6411	-.6867	-.4921	-.4956
.900		-.5367	.6171	-.4388	-.4930

ALPHAO(3) = 6.210 BETAO (1) = -10.020

SECTION (1)LEFT VERTICAL DEPENDENT VARIABLE CP

Z/BV	.1580	.3160	.6000	.8400	.9250
X/CV					
.000	.3434	.2510	.2724	.3058	.2047
.025	.7584	.6874	.6704	.6301	.6028
.050	.6532	.6435	.6199	.5947	.5513
.150	.5604	.5314	.4987	.4719	.3820
.300	.4472	.4133	.3997	.3442	.0000
.520	.2510	.1767	.1718	.0710	-.0462
.685	-.3342	-.5450	-.5758	-.6233	-.6182
.775	-.2662	-.3068	-.5014	-.5564	-.5883
.900		-.2677	-.4011	-.5370	-.5688

ALPHAO(3) = -6.220 BETAO (2) = -7.960

SECTION (1)LEFT VERTICAL DEPENDENT VARIABLE CP

Z/BV	.1580	.3160	.6000	.8400	.9250
X/CV					
.000	.4235	.3569	.3680	.4222	.3212
.025	.6441	.6018	.5975	.5867	.5368
.050	.5882	.5580	.5484	.5321	.4988
.150	.4785	.4531	.4317	.4147	.3305
.300	.3757	.3490	.3402	.2982	.0000
.520	.1856	.1370	.1309	.0479	-.0988
.685	-.3475	-.5934	-.6052	-.6482	-.6440
.775	-.2906	-.3739	-.5526	-.5888	-.6243
.900		-.2930	-.4771	-.5828	-.6059

ALPHA = [illegible] BETA = [illegible]

SECTION [illegible] LEFT VERTICAL DEPENDENT VARIABLE CP

Z/BV	.1580	.3160	.6000	.8400	[illegible]
X/CV					
.000	.5004	.4550	.4928	.5181	.5549
.025	.5407	.4825	.5015	.4887	.4446
.050	.4784	.4574	.4602	.4595	.4530
.150	[illegible]	.3721	[illegible]	.3525	[illegible]
.300	[illegible]	.2770	.2779	.2524	[illegible]
.520	.1369	.0900	.0859	[illegible]	[illegible]
.685	-.3759	-.6455	-.6386	-.6622	-.6664
.775	.3164	.4570	-.5911	-.6247	-.6571
.900		-.3198	-.5586	.6215	-.6460

ALPHAC SI = -6.120 BETAC 4. = -1.980

SECTION [illegible] LEFT VERTICAL DEPENDENT VARIABLE CP

Z/BV	.1580	.3160	.6000	.8400	.9250
X/CV					
.000	.6003	.5872	.6140	.6238	.5920
.025	.2815	.1183	.1925	.2280	.1221
.050	.3102	.2430	.2417	.2432	.1981
.150	.2297	.1974	.2091	.1943	.1320
.300	.1202	.1481	.1634	.1532	.0000
.520	.0515	[illegible]	[illegible]	[illegible]	[illegible]
.685	.4307	-.6945	-.6780	.7185	-.6735
.775	-.3512	.5167	-.6476	.6812	-.6850
.900		-.3793	-.6406	-.6461	-.6859

ALPHAC SI = -6.130 BETAC SI = [illegible]

SECTION [illegible] LEFT VERTICAL DEPENDENT VARIABLE CP

Z/BV	.1580	.3160	.6000	.8400	.9250
X/CV					
.000	.6100	.5855	.6289	.6248	.6297
.025	.3460	-.1035	-.1618	-.1519	-.1942
.050	.2392	.1050	-.1147	.0430	-.1583
.150	[illegible]	.0561	.1029	.0983	[illegible]
.300	.0217	[illegible]	.1139	.0827	[illegible]
.520	-.0299	[illegible]	-.0494	-.0451	-.1250
.685	-.3997	-.7139	-.6887	-.7141	.6740
.775	-.3647	.5240	.6705	.6871	.6918
.900		[illegible]	.6815	-.6932	-.6919

ORIGINAL PAGE IS OF POOR QUALITY

ARC11-716 IA14 O1+T12+S12R25+AT10 LEFT VERTICAL (RB1V32)

ALPHAO(3) = -6.180 BETAO (6) = 2.030

SECTION (1)LEFT VERTICAL DEPENDENT VARIABLE CP

Z/BV	.1580	.3180	.6000	.8400	.9250
X/CV					
.000	.5936	.5734	.5883	.5508	.5760
.025	-.0333	-.3130	-.6044	-.6321	-.4545
.050	.0355	-.2392	-.5734	-.6127	-.4241
.150	.1176	-.0190	-.0544	-.0980	-.2372
.300	-.0588	-.0776	-.0189	-.0379	.0000
.520	-.1111	.1156	-.0998	-.1085	-.1186
.685	-.4592	.7365	-.6947	-.7085	-.6467
.775	-.3482	-.5251	-.6895	-.6943	-.6874
.900		-.4136	-.6881	-.6958	-.6441

ALPHAO(3) = -6.180 BETAO (7) = 4.080

SECTION (1)LEFT VERTICAL DEPENDENT VARIABLE CP

Z/BV	.1580	.3180	.6000	.8400	.9250
X/CV					
.000	.5526	.5353	.5081	.4652	.5094
.025	-.1151	-.3791	-.6724	-.8099	-.8555
.050	-.1588	-.3761	-.6525	-.8201	-.8547
.150	.0422	-.1615	-.3572	-.6526	-.6812
.300	-.0805	-.1450	-.2306	-.2035	.0000
.520	-.1774	-.1770	-.2204	-.1750	-.1541
.685	-.4243	-.7343	-.6833	-.7381	-.6699
.775	-.3924	-.5245	-.7146	-.7152	-.7032
.900		-.4298	-.6525	-.7048	-.6619

ALPHAO(3) = -6.180 BETAO (8) = 6.080

SECTION (1)LEFT VERTICAL DEPENDENT VARIABLE CP

Z/BV	.1580	.3180	.6000	.8400	.9250
X/CV					
.000	.4941	.4523	.4089	.3677	.4250
.025	-.1849	-.4906	-.8478	-.8640	-.9071
.050	-.2229	-.4798	-.8533	-.8974	-.9308
.150	-.1561	-.3902	-.5664	-.7824	-.7855
.300	-.1053	-.2859	-.4490	-.4830	.0000
.520	-.2298	-.2452	-.4282	-.4237	-.3513
.685	-.4884	-.7268	-.7358	-.8540	-.7587
.775	-.3944	-.5362	-.7382	-.7784	-.7837
.900		-.4882	-.5158	-.5085	-.5738

ORIGINAL PAGE IS
OF POOR QUALITY

[illegible]

[illegible] VERTICAL [illegible]

[illegible]

SECTION [illegible] VERTICAL [illegible]

[illegible]	[illegible]	.3160	.6000	.8400	[illegible]
[illegible]					
.000	.4288	[illegible]	.5032	.2521	[illegible]
.025	-.2610	.5365	-.6940	.8222	-.4250
[illegible]	-.2990	.5365	-.7058	.8819	[illegible]
.150	-.4240	-.4995	-.8715	-.6960	-.6594
.500	[illegible]	-.4114	-.5890	.6196	.0000
.520	[illegible]	-.3485	-.5996	.4927	-.4850
.685	-.4955	-.8595	-.8202	-.6578	-.7411
.775	.3879	-.5404	.7011	.5666	-.5593
.900		-.5140	-.5552	[illegible]	-.4395

ALPHA(1) = -8.170 BETA(1,1) = 10.090

SECTION [illegible] VERTICAL DEPENDENT VARIABLE CP

[illegible]	.1580	.3160	.6000	.8400	.9250
[illegible]					
.000	.3501	.2160	.1728	.1137	.2187
.025	-.3577	.6835	.7495	.8108	.8648
[illegible]	-.4016	.6112	.7573	.9543	[illegible]
.150	-.6225	-.629	-.7559	-.7587	-.7419
.500	[illegible]	-.5904	-.6898	-.6912	[illegible]
[illegible]	.2977	-.5074	.7265	.5595	.5539
.685	[illegible]	-.7549	-.7634	-.5565	-.5797
.775	.3667	.5218	[illegible]	-.4901	[illegible]
[illegible]		.5275	[illegible]	.4337	-.5304

ALPHA(1) = 4.240 BETA(1,1) = 10.010

SECTION [illegible] VERTICAL DEPENDENT VARIABLE P

[illegible]	.1580	.3160	.6000	.8400	.9250
[illegible]					
.000	.3135	.2314	.2425	.2630	.1631
.025	[illegible]	.6366	.6207	.5837	.5344
[illegible]	.5975	[illegible]	.5708	.5478	.5105
.150	.5097	.4764	.4546	.4352	[illegible]
.500	.3464	[illegible]	.3667	[illegible]	[illegible]
.520	[illegible]	.1531	.1554	[illegible]	.762
.685	.3544	[illegible]	.6027	[illegible]	[illegible]
.775	-.2645	.5339	.5318	-.5768	[illegible]
[illegible]		[illegible]	.4255	.5553	[illegible]

ARC11-716 IA14 C4+T12+S12N25+AT10 LEFT VERTICAL (RB1.32)

ALPHAC(4) = -4.270 BETAC (2) = -8.020

SECTION (1)LEFT VERTICAL DEPENDENT VARIABLE CP

Z/BV	.1580	.3160	.6000	.6400	.9250
X/CV					
.000	.3905	.3248	.3545	.3762	.2752
.025	.5056	.5508	.5487	.5307	.4795
.050	.5205	.5115	.4994	.4935	.4864
.150	.4279	.4108	.3878	.3819	.2952
.300	.3288	.5028	.3085	.2702	.0000
.520	.1580	.1035	.1053	.0208	-.1281
.685	-.3557	-.6135	-.6239	-.6655	-.6617
.775	-.2775	-.5950	-.5688	-.6049	-.6425
.900		.5114	-.4897	-.5964	-.6290

ALPHAC(4) = 4.290 BETAC (3) = -5.970

SECTION (1)LEFT VERTICAL DEPENDENT VARIABLE CP

Z/BV	.1580	.3160	.6000	.6400	.9250
X/CV					
.000	.4735	.4230	.4575	.4681	.5893
.025	.4662	.4274	.4547	.4434	.3799
.050	.4314	.4070	.4165	.4141	.4037
.150	.3371	.3319	.3196	.3131	.2444
.300	.2900	.2369	.2451	.2179	.0700
.520	.1084	.0844	.0357	-.0042	-.1429
.685	-.3754	-.6626	-.6544	-.6947	-.6819
.775	-.2997	-.4596	-.6050	-.6519	[illegible]
.900		-.3529	-.5528	-.6490	-.6655

ALPHAC(4) = -4.290 BETAC (4) = -5.970

SECTION (1)LEFT VERTICAL DEPENDENT VARIABLE CP

Z/BV	.1580	.3160	.6000	.6400	.9250
X/CV					
.000	.5334	.4893	.5314	.5337	.4785
.025	.3705	.2671	.3508	.3426	.2577
.050	.3493	.2982	.3197	.3279	.3294
.150	.2503	.2422	.2452	.2456	.1752
.300	.1697	.1747	.1912	.1671	.0000
.520	.0596	.0205	-.0049	.0184	-.1506
.685	-.3809	-.6015	-.6741	-.6968	-.7003
.775	-.3232	-.4961	-.6466	-.6688	-.7026
.900		-.3571	-.6110	-.6791	-.6998

[illegible] EFFECT [illegible] BP1V2

[illegible]

[illegible] DEPENDENT VARIABLE P

[illegible]	15%	31%	[illegible]	[illegible]	[illegible]
[illegible]					
100	.5845	.5519	.5767	.5765	.5555
125	.2154	.0714	.1453	[illegible]	.1765
150	.2755	.1967	.1990	.2645	.1557
150	[illegible]	.1259	.1727	.1641	.1328
300	[illegible]	.1119	.1451	[illegible]	[illegible]
525	.2225	.0251	.0445	[illegible]	.1411
645	-.5551	-.7061	-.6903	-.7295	-.6986
775	.5594	.4989	.6623	[illegible]	.7143
910		-.3790	-.6539	-.7141	-.6796

ALPHA [illegible] = 4.220 BETA [illegible] = [illegible]

[illegible] EFFECT VERTICAL DEPENDENT VARIABLE CP

[illegible]	15%	31%	63%	84%	92%
[illegible]					
100	.5328	.5526	.5859	.5915	.5867
125	[illegible]	-.1555	-.2025	-.1790	-.2167
150	[illegible]	[illegible]	-.1621	[illegible]	-.1840
150	[illegible]	.3512	.3693	.4453	.3251
300	[illegible]	-.0166	.0882	.0541	.0331
525	[illegible]	.1659	-.0752	-.1543	-.1484
645	.5919	.7196	.6943	.6959	.6844
775	.5444	[illegible]	.6777	.6713	.7044
910		.5945	.6966	.6818	[illegible]

ALPHA [illegible] = 4.280 BETA [illegible] = 2.020

[illegible] EFFECT VERTICAL DEPENDENT VARIABLE CP

[illegible]	15%	31%	63%	84%	92%
[illegible]					
100	.5708	.5434	.5507	.5075	.5558
125	-.1823	.5260	-.6091	-.6379	.4484
150	.5134	.2621	-.5758	-.6225	-.4405
150	.5685	.5412	.0788	-.1193	.2721
300	.4823	.1146	.3460	.4612	[illegible]
525	.1437	.1592	.1199	.1274	[illegible]
645	.4551	.7371	.6644	.7168	[illegible]
775	.5765	[illegible]	.6921	.6979	[illegible]
910		[illegible]	.6877	.7045	.6574

ARC11-716 IA14 OI+T12+S12NB5+AT10 LEFT VERTICAL (R01/32)

ALPHAC (4) = -4.310 BETAC (8) = 4.040

SECTION - 1) LEFT VERTICAL DEPENDENT VARIABLE CP

Z/SV	.1580	.3160	.6000	.8400	.9250
X/CV					
.000	.5204	.9046	.4711	.4294	.4899
.029	-.1516	-.5891	-.8202	-.8187	-.8643
.090	-.1770	-.5910	-.6696	-.8287	-.8678
.190	.0228	-.1721	-.3448	-.6655	-.6814
.300	-.1012	-.1711	-.2334	-.2111	.0000
.520	-.2575	-.2085	-.2313	-.1901	-.1675
.695	-.4268	.7225	-.6467	-.7430	-.6754
.775	-.5577	-.5060	-.7168	-.7220	-.7091
.900		-.4375	-.5394	-.7167	-.6760

ALPHAC (4) = 4.322 BETAC (9) = 8.080

SECTION - 1) LEFT VERTICAL DEPENDENT VARIABLE CP

Z/SV	.1580	.3160	.6000	.8400	.9250
X/CV					
.000	.4048	.3365	.2713	.2191	.2071
.029	-.2755	.5428	-.7056	-.8281	-.9276
.090	-.5059	-.5906	-.7178	-.8930	-.9670
.190	.4310	.5065	.6846	-.7071	-.8884
.300	-.1035	.4226	.5652	-.6209	.0000
.520	.2475	.5809	.5951	-.6052	.4858
.695	-.4946	-.6317	-.8129	-.4862	-.7055
.775	.5438	.5368	.6748	-.5559	-.5034
.900		-.5126	-.5423	-.4887	-.4203

ALPHAC (4) = -4.210 BETAC (10) = 10.100

SECTION - 1) LEFT VERTICAL DEPENDENT VARIABLE CP

Z/SV	.1580	.3160	.6000	.8400	.9250
X/CV					
.000	.3207	.2077	.1481	.0708	.1820
.029	-.5718	-.6062	-.7535	-.8188	-.8676
.090	-.4175	-.6182	-.7818	-.8547	-.9105
.190	-.0275	-.6283	-.7354	-.7745	-.8105
.300	-.1134	-.5849	-.6876	-.7053	.0000
.520	-.3280	-.5102	-.7254	-.5791	-.5291
.695	-.5120	-.7101	-.7568	-.5462	-.5592
.775	-.5270	-.6104	-.6737	-.4762	-.4817
.900		-.5229	-.6182	-.4395	-.4905

[illegible]

[illegible] 01+1112+3121@3+A110 LEFT VERTICA [illegible]

ALPHAC [illegible] 2 2.950 BETAC (1) = [illegible]

SECTION [illegible] LEFT VERTICAL DEPENDENT VARIABLE CP

Z/BV	.1580	.3160	.6000	.8400	.925
X/CV					
.000	.3047	.2210	.2247	.2597	.1323
.025	.4553	.4136	.3988	.3629	.3179
.050	.5771	.5841	.5494	.5289	.4921
.150	.4835	.4566	.4340	.4174	.3246
.300	.3778	.3473	.3490	.2951	.0000
.520	.1966	.1291	.1206	.0298	-.0907
.685	-.3497	-.5754	-.6073	-.6410	-.6424
.775	-.2603	-.3409	-.5359	-.5810	-.6132
.900		-.2936	-.4241	-.5579	-.6016

ALPHAC (5) = -2.950 BETAC (2) = -8.000

SECTION (1)LEFT VERTICAL DEPENDENT VARIABLE CP

Z/BV	.1580	.3160	.6000	.8400	.9250
X/CV					
.000	.3779	.3143	.3294	.3417	.2463
.025	.5672	.5248	.5196	.5005	.4559
.050	.4937	.4845	.4755	.4675	.4435
.150	.4034	.3831	.3655	.3600	.2755
.300	.3084	.2789	.2881	.2506	.0000
.520	.1419	.0921	.0820	.0098	-.1379
.685	-.3850	-.6277	-.6335	-.6664	-.6657
.775	-.2905	-.3853	-.5791	-.6102	-.6463
.900		-.3055	-.4963	-.5984	-.6334

ALPHAC (5) = -2.950 BETAC (3) = -5.970

SECTION (1)LEFT VERTICAL DEPENDENT VARIABLE CP

Z/BV	.1580	.3160	.6000	.8400	.9250
X/CV					
.000	.4554	.4017	.4311	.4368	.3588
.025	.4710	.4126	.4409	.4282	.3848
.050	.4136	.3864	.4000	.4000	.3891
.150	.3156	.3090	.3036	.2998	.2241
.300	.2295	.2200	.2346	.2035	.0000
.520	.0971	.0515	.0165	-.0089	-.1524
.685	-.3784	-.6686	-.6642	-.6853	-.6836
.775	-.3016	-.4801	-.6276	-.6408	-.6738
.900		-.3384	-.5788	-.6402	-.6694

ARC11-716 IA14 OL+T12+S12N25+AT10 LEFT VERTICAL (RB1V32)

ALPHAO(5) = -2.910 BETAO (4) = -3.960

SECTION (1)LEFT VERTICAL DEPENDENT VARIABLE CP

Z/BV	.1580	.3160	.6000	.8400	.9250
X/CV					
.000	.5202	.4710	.5083	.5059	.4510
.025	.3563	.2360	.3017	.3232	.2402
.050	.3377	.2650	.2971	.3085	.3149
.150	.2305	.2162	.2261	.2278	.1611
.300	.1421	.1582	.1772	.1539	.0000
.520	.0457	.0105	-.0205	-.0309	-.1596
.685	-.3893	-.6929	-.6836	-.6985	-.7033
.775	-.3250	-.4939	-.6536	-.6711	-.7048
.900		-.3578	-.6182	-.6816	-.7028

ALPHAO(5) = -2.910 BETAO (5) = -2.000

SECTION (1)LEFT VERTICAL DEPENDENT VARIABLE CP

Z/BV	.1580	.3160	.6000	.8400	.9250
X/CV					
.000	.5722	.5145	.5585	.5468	.5248
.025	.1909	.0504	.1195	.1668	.0674
.050	.2515	.1786	.1758	.1890	.1411
.150	.1811	.1077	.1484	.1507	.0884
.300	.0409	.0910	.1399	.0878	.0000
.520	.0006	-.0367	-.0623	-.0532	-.1519
.685	-.3932	-.7096	-.6966	-.7199	-.7033
.775	-.3370	-.4892	-.6729	-.6942	-.7074
.900		-.3760	-.6630	-.7094	-.6883

ALPHAO(5) = -2.910 BETAO (6) = .080

SECTION (1)LEFT VERTICAL DEPENDENT VARIABLE CP

Z/BV	.1580	.3160	.6000	.8400	.9250
X/CV					
.000	.5805	.5322	.5806	.5541	.5624
.025	.0401	-.1429	-.2171	-.1894	-.2263
.050	.1968	.0607	-.1806	-.0171	-.1935
.150	.1309	.0146	.0467	.0723	.0097
.300	-.0212	-.0396	.0777	.0280	.0000
.520	-.0840	-.0816	-.0891	-.0732	-.1580
.685	-.3945	-.7210	-.7084	-.7095	-.6943
.775	-.3450	-.4912	-.6936	-.6878	-.7122
.900		-.3939	-.6813	-.6984	-.6831

ALPHAO(7) = -2.910 BETAO (7) = 2.030

SECTION (1)LEFT VERTICAL DEPENDENT VARIABLE CP

Z/BV	.1580	.3160	.6000	.8400	.9250
X/CV					
.000	.5559	.5217	.5232	.4768	.9029
.025	-.0842	-.3388	-.6261	-.6522	-.4737
.050	-.0098	-.2867	-.5888	-.6363	-.4588
.150	.0801	-.0809	-.1051	-.1394	-.3000
.300	-.0801	-.1331	-.0694	-.0804	.0000
.520	-.1658	-.1641	-.1430	-.1432	-.1589
.685	-.4358	-.7362	-.7117	-.7110	-.6726
.775	-.3762	-.5033	-.7153	-.7061	-.7066
.900		-.4053	-.7072	-.7151	-.6708

ALPHAO(5) = -2.920 BETAO (8) = 4.080

SECTION (1)LEFT VERTICAL DEPENDENT VARIABLE CP

Z/BV	.1580	.3160	.6000	.8400	.9250
X/CV					
.000	.5013	.4851	.4415	.3973	.4385
.025	-.1620	-.4020	-.6472	-.8259	-.8722
.050	-.1998	-.4046	-.6967	-.8784	-.8801
.150	.0002	-.1902	-.3656	-.6800	-.6983
.300	-.1193	-.1904	-.2537	-.2266	.0000
.480	-.2296	-.2228	-.2553	-.2092	-.1759
.685	-.4526	-.7364	-.7071	-.7489	-.6850
.775	-.3751	-.5201	-.7382	-.7294	-.7172
.900		-.4367	-.5168	-.7240	-.6946

ALPHAO(5) = -2.930 BETAO (9) = 6.070

SECTION (1)LEFT VERTICAL DEPENDENT VARIABLE CP

Z/BV	.1580	.3160	.6000	.8400	.9250
X/CV					
.000	.4344	.4091	.3417	.2992	.3581
.025	-.2267	-.4953	-.6848	-.8765	-.9213
.050	-.2571	-.5060	-.6905	-.9102	-.9458
.150	-.2119	-.4065	-.5894	-.7580	-.8108
.300	-.1391	-.2943	-.4685	-.5178	.0000
.520	-.2753	-.2906	-.4427	-.4561	-.3769
.685	-.4845	-.6843	-.7543	-.8449	-.7734
.775	-.3685	-.5172	-.7571	-.8214	-.7528
.900		-.4655	-.4802	-.5018	-.4786

ARC11-716 TA14 OI+T12+S12N25+AT10 LEFT VERTICAL (RB1V32)

ALPHAO(5) = -2.920 BETAO (10) = 8.110

SECTION (1)LEFT VERTICAL DEPENDENT VARIABLE CP

Z/BV	.1580	.3160	.6000	.8400	.9250
X/CV					
.000	.3763	.3079	.2401	.1889	.2552
.025	-.2918	-.5341	-.7316	-.8492	-.9400
.050	-.3268	-.5663	-.7348	-.9096	-.9791
.150	-.4623	-.5206	-.7105	-.7251	-.8805
.300	-.1198	-.4413	-.6081	-.6485	.0000
.520	-.3109	-.3862	-.6130	-.6251	-.4892
.685	-.5107	-.6269	-.8250	-.6770	-.6504
.775	-.3274	-.5522	-.6739	-.5544	-.4850
.900		-.5251	-.5587	-.4878	-.4268

ALPHAO(5) = -2.900 BETAO (11) = 10.100

SECTION (1)LEFT VERTICAL DEPENDENT VARIABLE CP

Z/BV	.1580	.3160	.6000	.8400	.9250
X/CV					
.000	.5090	.1905	.1182	.0441	.1476
.025	-.3802	-.6146	-.7818	-.8386	-.8826
.050	-.4500	-.6303	-.7899	-.8751	-.9250
.150	-.6387	-.6408	-.7646	-.7966	-.8291
.300	-.1378	-.5942	-.7130	-.7262	.0000
.520	-.3500	-.5257	-.7443	-.5956	-.5538
.685	-.5314	-.7041	-.7588	-.5579	-.5574
.775	-.3149	-.6125	-.6875	-.4909	-.4899
.900		-.5314	-.6353	-.4605	-.5004

ALPHAO(6) = -.750 BETAO (1) = -10.040

SECTION (1)LEFT VERTICAL DEPENDENT VARIABLE CP

Z/BV	.1580	.3160	.6000	.8400	.9250
X/CV					
.000	.2633	.1674	.1745	.1734	.0712
.025	.6274	.5778	.5637	.5323	.4828
.050	.5413	.5383	.5153	.5000	.4667
.150	.4517	.4249	.4040	.3930	.2977
.300	.3449	.3131	.3238	.2746	.0000
.520	.1674	.1015	.0991	.0141	-.1058
.685	-.3724	-.5956	-.6163	-.6560	-.6533
.775	-.2721	-.3543	-.5437	-.5910	-.6223
.900		-.3054	-.4202	-.5631	-.6135

[illegible] ROTATIC LEFT VERTICAL [illegible]

[illegible] BETA(3) = -5.040

SECTION (1) LEFT VERTICAL DEPENDENT VARIABLE CP

Z/BV	.1580	.3160	.6000	.8400	.9250
X/CV					
.000	.3314	.2858	.2779	.2830	.1837
.025	.5430	.4948	.4868	.4819	.4189
.050	.4627	.4524	.4375	.4288	.4094
.150	.3707	.3564	.3287	.3310	.2491
.300	.2782	.2574	.2595	.2247	.0000
.520	.1205	.0588	.0369	-.0140	-.1580
.685	-.3648	-.6453	-.6391	-.6756	-.6730
.775	-.3069	-.4290	-.5875	-.6229	-.6518
.900		-.3224	-.5075	-.6082	-.6445

ALPHAO(6) = -.720 BETAO (3) = -5.990

SECTION (1) LEFT VERTICAL DEPENDENT VARIABLE CP

Z/BV	.1580	.3160	.6000	.8400	.9250
X/CV					
.000	.4164	.3539	.3768	.3729	.2972
.025	.4459	.3772	.4035	.3946	.3285
.050	.3864	.3559	.3649	.3691	.3597
.150	.2788	.2763	.2704	.2696	.1990
.300	.1960	.1947	.2026	.1787	.0000
.520	.0705	.0219	-.0122	-.0393	-.1603
.685	-.3886	-.5793	-.6712	-.7004	-.7013
.775	-.3165	-.4709	-.6331	-.6570	-.6932
.900		-.3456	-.5877	-.6616	-.6914

ALPHAO(6) = -.710 BETAO (4) = -3.980

SECTION (1) LEFT VERTICAL DEPENDENT VARIABLE CP

Z/BV	.1580	.3160	.6000	.8400	.9250
X/CV					
.000	.4855	.4287	.4611	.4481	.3919
.025	.3382	.2161	.2835	.2986	.2155
.050	.3140	.2382	.2765	.2854	.2766
.150	.2067	.1873	.2009	.2044	.1432
.300	.1052	.1382	.1541	.1340	.0000
.520	.0266	-.0114	-.0419	-.0452	-.1870
.685	-.5960	-.7032	-.6931	-.7048	-.7133
.775	-.5313	.4982	-.6872	-.6796	-.7136
.900		.5629	-.6278	-.6902	-.7183

ARC11-718 IA14 OL+T12+S12N25+AT10 LEFT VERTICAL (RB1V32)

ALPHAO(6) = -.700 BETAO (5) = -2.010

SECTION (1)LEFT VERTICAL DEPENDENT VARIABLE CP

Z/BV	.1580	.3160	.6000	.8400	.9250
X/CV					
.000	.5417	.4773	.6077	.4962	.4733
.025	.1640	.0356	.0003	.1524	.0535
.050	.2192	.1470	.1486	.1740	.1591
.150	.1593	.0732	.1217	.1323	.0778
.300	.0204	.0575	.1081	.0728	.0000
.520	-.0318	-.0618	-.0825	-.0715	-.1746
.685	-.3912	-.7139	-.7044	-.7170	-.7136
.775	-.3357	-.4829	-.6805	-.6960	-.7162
.900		-.3750	-.6680	-.7085	-.7038

ALPHAO(6) = -.690 BETAO (6) = .040

SECTION (1)LEFT VERTICAL DEPENDENT VARIABLE CP

Z/BV	.1580	.3160	.6000	.8400	.9250
X/CV					
.000	.5543	.4963	.5157	.5115	.5237
.025	.0076	-.1652	-.2389	-.2022	-.2352
.050	.1721	.0349	-.2084	-.0711	-.2027
.150	.1062	-.0116	.0131	.0511	-.0120
.300	-.0464	-.0609	.0519	.0029	.0000
.520	-.1106	-.1046	-.1070	-.0998	-.1768
.685	-.4012	-.7135	-.7128	-.7291	-.7071
.775	-.3483	-.4794	-.7026	-.7112	-.7209
.900		-.3914	-.6885	-.7209	-.7012

ALPHAO(6) = -.690 BETAO (7) = 2.030

SECTION (1)LEFT VERTICAL DEPENDENT VARIABLE CP

Z/BV	.1580	.3160	.6000	[illegible]	.9250
X/CV					
.000	.5295	.4867	.4785	.4298	.4548
.025	-.1185	-.3610	-.6353	-.6632	-.4988
.050	-.0278	-.3109	-.6027	-.6524	-.4895
.150	.0533	-.0911	-.1383	-.1681	-.3336
.300	-.1055	-.1505	-.1010	-.1118	.0000
.520	-.1999	-.1882	-.1868	-.1814	-.1844
.685	-.4321	-.7807	-.7220	-.7223	-.6843
.775	-.3838	-.4926	-.7282	-.7187	-.7202
.900		-.3849	-.6591	-.7302	-.6853

[illegible] LEFT VERTICAL RB1 [illegible]

ALPHAC ([illegible]) = [illegible] BETAC ([illegible]) = [illegible]

SECTION ([illegible]) LEFT VERTICAL DEPENDENT VARIABLE [illegible]

X/CV \ Z/BV	.1580	.3160	.6000	.8400	.9250
.000	.4675	.4499	.4023	.3448	.3910
.025	-.1864	-.4147	-.8576	-.8255	-.8796
.050	-.2239	-.4152	-.7009	-.8416	-.8880
.150	-.028[illegible]	-.2119	-.3712	-.6953	-.7147
.300	-.1400	-.2108	-.2729	-.2564	.0000
.520	-.2545	-.2478	-.2715	-.2432	-.2034
.685	-.4373	-.6750	-.7201	-.7521	-.6973
.775	-.3317	-.4865	-.7472	-.7401	-.7311
.900		-.4501	-.4997	-.7288	-.7233

ALPHAC (6) = -.720 BETAC (9) = 8.080

SECTION (1) LEFT VERTICAL DEPENDENT VARIABLE CP

X/CV \ Z/BV	.1580	.3160	.6000	.8400	.9250
.000	.3998	.3795	.3015	.2529	.3134
.025	-.2501	-.4989	-.8992	-.8680	-.9108
.050	-.2770	-.5163	-.7115	-.9040	-.9354
.150	-.2537	-.4215	-.6062	-.7363	-.8214
.300	-.1512	-.3162	-.4850	-.5195	.0000
.520	-.3019	-.3167	-.4495	-.4662	-.3922
.685	-.4936	-.6424	-.7615	-.8052	-.7463
.775	-.3277	-.5134	-.7579	-.5997	-.6634
.900		-.4712	-.4727	-.4833	-.4373

ALPHAC (6) = -.730 BETAC (10) = 8.100

SECTION (1) LEFT VERTICAL DEPENDENT VARIABLE CP

X/CV \ Z/BV	.1580	.3160	.6000	.8400	.9250
.000	.3380	.2807	.1949	.1432	.2187
.025	-.3187	-.5808	-.7384	-.8385	-.9253
.050	-.3515	-.5720	-.7442	-.8940	-.9659
.150	-.5030	-.5350	-.7252	-.7308	-.8808
.300	-.1331	-.4851	-.6193	-.6503	.0000
.520	-.3378	-.4145	-.6245	-.6281	-.4890
.685	-.5207	-.6224	-.8058	-.6408	-.5640
.775	.3141	-.5735	-.6625	-.5155	-.4675
.900		.5166	-.5584	-.4636	-.4369

ARC11-716 TA14 C1+T12+S12N25+AT10 LEFT VERTICAL (RB1V32)

ALPHAO (6) = -.740 BETAO (11) = 10.160

SECTION (1)LEFT VERTICAL DEPENDENT VARIABLE CP

Z/BV	.1580	.3160	.6000	.8400	.9250
X/CV					
.000	.2686	.1618	.0765	-.0057	.0945
.025	-.4063	-.6161	-.7832	-.8303	-.8209
.050	-.4513	-.6348	-.7895	-.8616	-.8332
.150	-.6776	-.8429	-.7715	-.8047	-.8053
.300	-.1526	-.6065	-.7232	-.7358	.0000
.520	-.3655	-.5496	-.7468	-.6105	-.7046
.685	-.5561	-.7[illegible]9	-.7527	-.5749	-.6431
.775	-.5[illegible]78	-.5987	-.6844	-.5336	-.6444
.900		-.5[illegible]	-.6354	-.5203	-.6335

ALPHAO (7) = 2.050 BETAO (1) = -10.000

SECTION (1)LEFT VERTICAL DEPENDENT VARIABLE CP

Z/BV	.1580	.3160	.6000	.8400	.9250
X/CV					
.000	.2133	.1243	.1162	.1037	-.0011
.025	.5869	.5204	.5[illegible]8	.4831	.4423
.050	.4801	.476[illegible]	.46[illegible]	.4550	.4255
.150	.3898	.3812	.3511	.3546	.2642
.300	.2996	.2768	.2758	.2418	.0000
.520	.1375	.0681	.0601	-.0088	-.1280
.685	-.4087	-.6265	-.6248	-.6464	-.6561
.775	-.3022	-.4150	-.5563	-.5992	-.6302
.900		-.2910	-.4271	-.5652	-.6227

ALPHAO (7) = 2.080 BETAO (2) = -8.030

SECTION (1)LEFT VERTICAL DEPENDENT VARIABLE CP

Z/BV	.1580	.3160	.6000	.8400	.9250
X/CV					
.000	.2011	.2256	.2320	.2017	.1083
.025	.5074	.4543	.4476	.4083	.5614
.050	.4205	.4161	.3989	.3751	.3594
.150	.3265	.3301	.2910	.2794	.2008
.300	.2440	.2284	.2253	.1788	.0000
.520	.1013	.0393	-.0076	-.0553	.1702
.685	-.5831	-.6580	-.6560	-.6885	-.6875
.775	-.3155	-.4521	-.6146	-.6832	-.6852
.900		-.3343	-.5504	-.6374	-.6603

[illegible] LEFT VERTICAL [illegible]

[illegible] 2 [illegible] 3 [illegible]

SECTION [illegible] LEFT [illegible] DEPENDENT VARIABLE CP

Z/BV	.1580	.3160	.6000	.8400	.9250
X/CV					
.000	.3729	.3112	.5280	.3113	.2344
.025	.4203	.3408	.3636	.3568	.2979
.050	.3902	.3121	.3278	.3293	.3241
.150	.2417	.2308	.2337	.2403	.1659
.300	.1589	.1838	.1746	.1549	.0000
.520	.0484	.0051	-.0417	-.0529	-.1972
.685	-.4055	-.6838	-.6786	-.6844	-.7067
.775	-.3302	-.4977	-.6440	-.6499	-.6974
.900		-.5522	-.5983	.6497	-.7002

ALPHA(7) = 1.940 BETA(4) = -4.010

SECTION (11) LEFT VERTICAL DEPENDENT VARIABLE CP

Z/BV	.1580	.3160	.6000	.8400	.9250
X/CV					
.000	.4518	.3932	.4157	.3909	.3360
.025	.2938	.1595	.2372	.2557	.1764
.050	.2706	.1773	.2279	.2413	.2510
.150	.1711	.1367	.1618	.1699	.1092
.300	.0407	.0953	.1252	.0981	.0000
.520	-.0129	-.0310	-.0705	-.0824	-.2079
.685	-.4012	-.7115	-.7018	-.7080	-.7232
.775	-.3382	-.4906	-.6739	-.6867	-.7272
.900		.3621	.6432	-.6972	-.7308

ALPHA(7) = 1.940 BETA(5) = 2.000

SECTION (11) LEFT VERTICAL DEPENDENT VARIABLE CP

Z/BV	.1580	.3160	.6000	.8400	.9250
X/CV					
.000	.5146	.4573	.4577	.4408	.4258
.025	.1143	.0026	.0391	.1089	[illegible]
.050	.1798	.1191	.0962	.1252	[illegible]
.150	.1259	.0290	.0774	.0907	.0454
.300	.0158	.0133	.0955	.0354	[illegible]
.520	[illegible]	.0316	[illegible]	[illegible]	[illegible]
.685	.3494	.7096	.7096	.7200	.7241
.775	-.3350	-.4745	-.6991	-.7000	-.7276
.900		.3772	.6796	.7190	.7195

ARC11-716 TA14 01+T12+S12N25+AT10 LEFT VERTICAL (B1V52)

ALPHAO(7) = 1.950 BETAO (8) = .040

SECTION (1)LEFT VERTICAL DEPENDENT VARIABLE CP

Z/BV	.1580	.3160	.6000	.8400	.9250
X/CV					
.000	.5203	.4549	.4581	.4506	.4659
.025	-.0408	-.1987	-.2859	-.2488	-.2592
.050	.1348	.0059	-.2507	-.1278	-.2193
.150	.0747	-.0446	-.0320	.0147	-.0452
.300	-.0740	-.1081	.0299	-.0238	.0000
.520	-.1433	.1355	-.1432	-.1247	-.2013
.685	-.4170	-.7108	-.7258	-.7340	-.7212
.775	-.3596	-.4793	-.7147	-.7215	-.7337
.900		-.3910	-.6868	-.7298	-.7168

ALPHAO(7) = 1.930 BETAO (7) = 2.030

SECTION (1)LEFT VERTICAL DEPENDENT VARIABLE CP

Z/BV	.1580	.3160	.6000	.8400	.9250
X/CV					
.000	.5063	.4455	.4280	.5808	.4054
.025	-.1322	-.3790	-.6327	.6613	-.5094
.050	.0330	-.3410	-.5987	-.6500	-.4997
.150	.0263	-.1125	-.1645	-.1893	-.3566
.300	-.1290	-.1868	.1136	-.1404	.0000
.520	-.2365	-.2128	-.1869	-.1719	-.2137
.685	-.3969	-.6649	-.7233	-.7364	-.7088
.775	-.3285	-.4637	-.7285	-.7251	-.7226
.900		-.4060	-.5268	-.7354	-.7094

ALPHAO(7) = 1.830 BETAO (8) = 4.070

SECTION (1)LEFT VERTICAL DEPENDENT VARIABLE CP

Z/BV	.1580	.3160	.6000	.8400	.9250
X/CV					
.000	.4328	.4081	.3543	.2954	.3364
.025	-.2101	-.4350	-.6716	-.8224	-.8881
.050	-.2476	-.4444	-.7164	-.8448	-.8938
.150	-.0735	-.2445	-.5861	-.7111	-.7291
.300	-.1820	-.2445	-.2890	-.2602	.0000
.520	-.2887	-.2792	-.2394	.2684	-.2293
.685	-.4304	-.6321	-.7323	-.7595	-.7029
.775	-.3080	-.4783	-.7589	-.7491	-.7400
.900		-.4335	-.4732	-.6938	-.7376

[illegible] 2MCS A [illegible] LEFT VERTICAL 7B1V32

ALPHA [illegible] = [illegible] BETA [illegible] = [illegible]

SECTION [illegible] LEFT VERTICAL DEPENDENT VARIABLE CP

Z/B	.1800	.3160	.6000	.8400	.9250
R/C					
.000	.3554	.3580	.2914	.2022	.2554
.025	-.2943	-.9010	-.7121	-.8498	-.9240
.050	-.3227	-.5100	-.7202	-.9088	-.9533
.150	-.3194	-.4427	-.6277	-.7188	-.8320
.300	-.1542	-.3437	-.4871	-.5541	[illegible]
.520	-.3278	-.3440	-.4493	-.5079	-.4033
.685	-.4939	-.6007	-.7666	-.8064	-.7682
.775	-.5083	-.5156	-.7234	-.6456	-.6412
.900		-.4884	-.4750	-.5056	-.4435

ALPHAC [illegible] = 1.090 BETAC [illegible] = 8.100

SECTION [illegible] LEFT VERTICAL DEPENDENT VARIABLE CP

Z/B	.1580	.3160	.6000	.8400	.9250
R/C					
.000	.2845	.2373	.1427	.0925	.1471
.025	-.3814	-.5668	-.7556	-.8445	-.9290
.050	-.4057	-.5809	-.7857	-.8869	-.9713
.150	-.5837	-.5473	-.7486	[illegible]	-.6672
.300	-.1596	-.4921	-.6594	[illegible]	[illegible]
.520	-.5594	-.4619	-.5415	-.6448	[illegible]
.685	[illegible]	.6361	-.8014	[illegible]	-.5426
.775	-.5455	.5848	.6879	[illegible]	-.4694
.900		[illegible]	-.5754	.4731	[illegible]

ALPHA [illegible] = [illegible] BETA [illegible] = 10.140

SECTION [illegible] LEFT VERTICAL DEPENDENT VARIABLE CP

Z/B	.1580	.3160	.6000	.8400	.9250
R/C					
.000	.2115	.1086	[illegible]	-.0864	.0197
.025	.5401	-.6525	-.8041	-.8407	.7695
.050	.5690	.6824	-.8095	-.8659	-.7852
.150	-.7853	-.6804	-.7926	-.8105	-.7910
.300	[illegible]	-.6653	-.7468	.7515	[illegible]
.520	[illegible]	.6280	-.7844	-.6580	[illegible]
.685	-.4755	-.7402	.7552	.5947	[illegible]
.775	.3108	-.5837	-.8985	-.5824	[illegible]
.900		-.4784	[illegible]	-.5959	-.5941

ARC11-716 IA14 OL+T12+S12N25+AT10 LEFT VERTICAL RB1V32

ALPHA(0) = 3.970 BETA(1) = -9.990

SECTION (1) LEFT VERTICAL DEPENDENT VARIABLE CP

Z/BV	.1580	.3180	.6000	.8400	.9250
X/CV					
.000	.1795	.0882	.0809	.0545	-.0588
.025	.5114	.4800	.4756	.4515	.4140
.050	.4298	.4481	.4308	.4214	.3970
.150	.3588	.3550	.3211	.3101	.2596
.300	.2684	.2552	.2687	.2227	.0000
.525	.1180	.1544	.0598	-.0238	-.1253
.665	-.4248	-.6354	-.6230	-.6401	-.6539
.775	-.3149	-.4448	-.5519	-.6029	-.6267
.900		-.3452	-.4350	-.5603	-.6205

ALPHA(0) = 3.990 BETA(2) = 0.000

SECTION (1) LEFT VERTICAL DEPENDENT VARIABLE CP

Z/BV	.1580	.3180	.6000	.8400	.9250
X/CV					
.000	.2651	.1994	.2104	.1712	.0768
.025	.4629	.4112	.4111	.3775	.3592
.050	.3733	.3721	.3654	.3468	.3356
.150	.2771	.2875	.2610	.2249	.1754
.300	.2001	.1958	.2029	.1617	.0000
.525	.0743	.1218	-.0355	-.0545	-.1453
.665	-.4278	-.6683	-.6662	-.6802	-.6965
.775	-.3580	-.4849	-.6280	-.6535	-.6820
.900		-.3470	-.5641	-.6359	-.6856

ALPHA(0) = 3.970 BETA(3) = -8.020

SECTION (1) LEFT VERTICAL DEPENDENT VARIABLE CP

Z/BV	.1580	.3180	.6000	.8400	.9250
X/CV					
.000	.3643	.2833	.3081	.2734	.1984
.025	.3830	.2810	.3287	.3210	.2834
.050	.3159	.2625	.2924	.2909	.2899
.150	.2096	.1984	.2081	.1697	.1395
.300	.1179	.1281	.1548	.1280	.0000
.525	.0175	-.0127	-.0818	-.0803	-.2159
.665	.4190	-.6917	-.6852	-.7198	-.7145
.775	-.3403	-.4928	-.6553	-.6778	-.7038
.900		-.3523	-.6098	-.6732	-.7129

[illegible] LEFT VERTICAL FEB1V32

ALPHA [illegible] = [illegible] BETA [illegible] = [illegible]

REGRESSION (1) LEFT VERTICAL DEPENDENT VARIABLE CP

Z B+	.1580	.5160	.6000	.8400	.9250
X/C+					
.000	.4594	.3523	.3857	.3528	.3056
.025	.2468	.1309	.1929	.2218	.1473
.050	.2506	.1417	.1890	.2089	.2044
.150	.1471	.0842	.1289	.1052	.0856
.300	[illegible]	.0990	.0987	.0724	[illegible]
.520	-.0436	-.0522	-.0864	-.0963	-.2261
.685	-.4073	-.7177	-.7019	-.7045	.7317
.775	.3449	-.4581	-.6907	-.6961	.7312
.900		-.3594	-.6547	-.7055	-.7400

ALPHA(8) = 3.030 BETA(5) = -2.000

REGRESSION (1) LEFT VERTICAL DEPENDENT VARIABLE CP

Z B+	.1580	.5160	.6000	.8400	.9250
X/C+					
.000	.5227	.4101	.4195	.3951	.3835
.025	.0864	-.0236	-.0178	.0094	-.0197
.050	.1904	.0987	.0477	.0490	.0622
.150	.1018	.0464	.0346	.0259	.0122
.300	-.0447	.0378	.0776	[illegible]	[illegible]
.520	-.1112	-.1084	-.1361	-.1151	-.2275
.685	-.4068	-.7126	-.7212	.7215	-.7382
.775	.3456	.4758	-.7147	-.7181	-.7402
.900		-.3518	-.6892	-.7291	-.7345

ALPHA(8) = 3.040 BETA(6) = .04[illegible]

REGRESSION (1) LEFT VERTICAL DEPENDENT VARIABLE CP

Z B+	.1580	.5160	.6000	.8400	.9250
X/C+					
.000	.4995	.4241	.4170	.3922	.4127
.025	.4692	-.2135	.3100	.3007	[illegible]
.050	.1182	-.0348	-.2771	-.1822	-.2451
.150	[illegible]	[illegible]	-.0779	[illegible]	[illegible]
.300	[illegible]	.1379	.0219	-.0514	[illegible]
.520	.1784	.1443	.1646	.1409	[illegible]
.685	.4192	[illegible]	-.7335	-.7339	.7264
.775	.5497	[illegible]	.7252	.7256	.7343
.900		[illegible]	[illegible]	.7335	-.7264

AMES 11 716 IA14 1+7\2+S12N23+ATIG LEFT VERTICAL 0001/32

ALPHA(0) = 4.030 BETA(0) = 2.050

SECTION 1 LEFT VERTICAL DEPENDENT VARIABLE CP

Z/BV	.1580	.3160	.6000	.8400	.9250
R/CV					
.000	.4967	.4145	.3788	.3296	.3582
.029	.1957	.3915	-.3421	.6690	-.5327
.050	.0175	-.3626	-.6165	-.6603	-.5256
.150	.3175	.1599	-.2097	-.2322	.3860
.300	-.1549	-.2182	-.1409	-.1755	.0000
.520	.1466	.2455	-.2212	-.1996	-.2277
.689	.3653	-.6186	-.7318	.7467	.7214
.779	.3654	-.4409	-.7417	-.7344	-.7612
.900		-.4546	.4692	-.7449	-.7258

ALPHA(0) = 4.020 BETA(0) = 4.070

SECTION 1 LEFT VERTICAL DEPENDENT VARIABLE CP

Z/BV	.1580	.3160	.6000	.8400	.9250
R/CV					
.000	.4044	.3740	[illegible]	.5[illegible]4	.2918
.029	.2211	.4527	-.6913	.5270	-.8857
.050	.2531	.4672	.7548	.8514	-.8968
.150	.1013	.2742	.5973	-.7314	-.7431
.300	-.1831	.2667	.3115	-.2889	.0000
.520	.3242	-.3104	-.3126	.2943	-.2479
.689	.3625	.5554	.7404	-.7563	-.7[illegible]7
.779	-.2776	-.4797	-.7208	-.7517	.7413
.900		-.4097	-.4372	-.5254	-.7012

ALPHA(0) = 4.010 BETA(0) = 6.080

SECTION 1 LEFT VERTICAL DEPENDENT VARIABLE CP

Z/BV	.1580	.3160	.6000	.8400	.9250
R/CV					
.000	.5243	.3053	.2183	.1615	.2104
.029	-.5405	-.5202	.7155	.8580	.8277
.050	-.5755	-.5491	-.7258	-.8977	-.9583
.150	.3037	-.4709	.6371	.7296	.8450
.300	.2115	.3492	.5051	.5858	.0000
.520	.5640	.5888	.4543	.5526	.4275
.689	.5322	.5243	-.7711	.7845	.7323
.779	.2[illegible]	-.5501	-.6175	-.5902	-.5479
.900		-.4754	-.4653	-.4998	-.3[illegible]96

[illegible] LEFT VERTICAL [illegible]

ALPHA [illegible] = 4.980 BETA (10) = [illegible]

SECTION [illegible] LEFT VERTICAL DEPENDENT VARIABLE CP

Z/BV	.1580	.3160	.6000	.8400	.9250
X/CV					
.000	.2511	.2179	.1029	.0450	.1050
.025	-.4342	-.5975	-.7536	-.8210	-.9126
.050	-.4632	-.6102	-.7621	-.8477	-.9503
.150	-.5507	-.5816	-.7491	-.7621	-.8498
.300	-.2250	-.5124	-.6399	-.6921	.0000
.520	-.3958	-.4681	-.6509	-.6442	-.5490
.685	-.3585	-.5928	-.7710	-.5612	-.5563
.775	-.2953	-.5559	-.6754	-.5227	-.5045
.900		-.3643	-.5983	-.5020	-.4853

ALPHA (10) = 4.050 BETA (11) = 10.160

SECTION (11) LEFT VERTICAL DEPENDENT VARIABLE CP

Z/BV	.1580	.3160	.6000	.8400	.9250
X/CV					
.000	.1739	.0839	-.0455	-.1307	-.0320
.025	-.5244	-.6826	-.8250	-.8429	-.7661
.050	-.5652	-.6941	-.8289	-.8671	-.7863
.150	-.7156	-.7084	-.8130	-.8180	-.7815
.300	-.2752	-.6813	-.7640	-.7977	.0000
.520	-.4454	-.6170	-.7760	-.6766	-.6492
.685	-.3531	-.6428	-.7778	-.6404	-.6030
.775	-.3116	-.4967	-.7363	-.6353	-.6059
.900		-.3756	-.6888	-.6453	-.6451

ALPHA (10) = 5.980 BETA (11) = -9.980

SECTION (11) LEFT VERTICAL DEPENDENT VARIABLE CP

Z/BV	.1580	.3160	.6000	.8400	.9250
X/CV					
.000	.1663	.0838	.0550	-.0026	-.1084
.025	.4779	.4439	.4486	.4240	.3859
.050	.3750	.3932	.4006	.3972	.3710
.150	.2838	.3088	.3099	.2887	.2210
.300	.2028	.2254	.2563	.2043	.0000
.520	.0825	.0543	.0300	-.0388	-.1331
.685	-.4657	-.6227	-.6198	-.6308	-.6541
.775	-.3238	-.4355	-.5514	-.6029	-.6248
.900		-.3053	-.4258	-.5519	-.6146

ORIGINAL PAGE IS OF POOR QUALITY

ARC11-716 IA14 O1+T12+S12N25+AT10 LEFT VERTICAL (RB1V32)

ALPHAO(9) = 5.980 BETAO (2) = -7.980

SECTION (1)LEFT VERTICAL DEPENDENT VARIABLE CP

Z/BV	.1580	.3180	.6000	.8400	.9250
X/CV					
.000	.2784	.1818	.1882	.1326	.0383
.025	.4192	.3622	.3751	.3481	.3131
.050	.3328	.3211	.3284	.3141	.3131
.150	.2377	.2400	.2307	.2011	.1551
.300	.1479	.1658	.1802	.1410	.0000
.520	.0299	.0049	-.0586	-.0711	-.2044
.685	-.4844	-.6750	-.6784	-.6679	-.6846
.775	-.3487	-.5127	-.6352	-.6454	-.6642
.900		-.3509	-.5650	-.6127	-.6844

ALPHAO(9) = 5.940 BETAO (3) = -5.960

SECTION (1)LEFT VERTICAL DEPENDENT VARIABLE CP

Z/BV	.1580	.3180	.6000	.8400	.9250
X/CV					
.000	.3803	.2610	.2768	.2355	.1594
.025	.3524	.2447	.2853	.2887	.2346
.050	.2728	.2211	.2484	.2638	.2634
.150	.1828	.1601	.1698	.1449	.1162
.300	.0734	.0908	.1357	.1055	.0000
.520	-.0252	-.0334	-.0830	-.0967	-.2246
.685	-.4484	-.7018	-.6938	-.7095	-.7192
.775	-.3601	-.5035	-.6667	-.6847	-.7109
.900		-.3621	-.6215	-.6793	-.7220

ALPHAO(9) = 5.980 BETAO (4) = -5.990

SECTION (1)LEFT VERTICAL DEPENDENT VARIABLE CP

Z/BV	.1580	.3180	.6000	.8400	.9250
X/CV					
.000	.4323	.3300	.3421	.3031	.2566
.025	.1957	.1004	.1580	.1849	.1217
.050	.1843	.1193	.1516	.1718	.1776
.150	.1119	.0519	.0902	.0834	.0622
.300	-.0191	.0193	.0740	.0470	.0000
.520	-.0759	-.0858	-.1121	-.1195	-.2590
.685	-.4328	-.7176	-.7065	-.7125	-.7384
.775	-.3614	-.4892	-.7005	-.7031	-.7346
.900		-.3722	-.6654	-.7067	-.7475

[illegible] LEFT VERTICAL 3B1V32

[illegible] = 3.370 BETA(5) = -.970

SECTION LEFT VERTICAL DEPENDENT VARIABLE CP

Z/BV	.1580	.3160	.6000	.8400	.9250
X/CV					
.000	.9201	.3779	.3798	.3373	.3355
.025	.0623	-.0508	-.0468	.0340	-.0500
.050	.1210	.0719	.0147	.0320	.0350
.150	.0786	-.0328	.0013	-.0057	-.0134
.300	-.0760	-.0729	.0478	-.0194	.0000
.520	-.1284	-.1388	-.1604	-.1429	-.2468
.685	-.4527	-.7192	-.7321	-.7269	-.7505
.775	-.3602	-.4817	-.7277	-.7297	-.7533
.900		-.3928	-.6925	-.7382	-.7518

ALPHAO(9) = 5.980 BETAO (6) = .030

SECTION (1)LEFT VERTICAL DEPENDENT VARIABLE CP

Z/BV	.1580	.3160	.6000	.8400	.9250
X/CV					
.000	.4885	.3962	.3775	.3453	.3650
.025	-.0759	-.2271	-.3231	-.2995	-.3110
.050	.1113	-.0534	-.2864	-.2067	-.2832
.150	.0384	-.0872	-.1082	-.0707	-.0950
.300	-.1239	-.1502	-.0505	-.0856	.0000
.520	-.2055	-.1891	-.1960	-.1832	-.2411
.685	-.4292	-.6930	-.7444	-.7339	-.7396
.775	-.3492	-.4776	-.7340	-.7293	-.7497
.900		-.4042	-.5328	-.7369	-.7412

ALPHAO(9) = 5.970 BETAO (7) = 2.030

SECTION (1)LEFT VERTICAL DEPENDENT VARIABLE CP

Z/BV	.1580	.3160	.6000	.8400	.9250
X/CV					
.000	.4975	.3834	.3422	.2834	.3168
.025	-.1888	-.3987	-.6406	-.6591	-.5389
.050	.0092	-.3735	-.6138	-.6505	-.5366
.150	-.0060	-.1610	-.2251	-.2413	-.4020
.300	-.1785	-.2401	-.1520	-.1886	.0000
.520	-.2991	-.2674	-.2450	-.2219	-.2530
.685	-.4137	-.5070	-.7461	-.7504	-.7572
.775	-.3252	-.4473	-.7580	-.7391	-.7434
.900		-.4535	-.4541	-.7302	-.7392

ARC11-716 IA14 O1+T12+S12N25+AT10 LEFT VERTICAL (RB1V32)

ALPHAO(8) = 5.950 BETAO (8) = 4.080

SECTION (1)LEFT VERTICAL DEPENDENT VARIABLE CP

Z/BV	.1580	.3160	.6000	.8400	.9250
X/CV					
.000	.4087	.3458	.2720	.2147	.2590
.025	-.2158	-.4549	-.6933	-.8324	-.8698
.050	-.2478	-.4791	-.7388	-.8607	-.8715
.150	-.0798	-.2753	-.4151	-.7345	-.7660
.300	-.2112	-.2836	-.3119	-.3055	.0000
.520	-.3537	-.3400	-.3216	-.3080	-.2633
.685	-.3605	-.4957	-.7478	-.7641	-.7212
.775	-.2530	-.4960	-.5856	-.7590	-.7500
.900		-.4011	-.4092	-.4859	-.5926

ALPHAO(9) = 5.940 BETAO (9) = 6.100

SECTION (1)LEFT VERTICAL DEPENDENT VARIABLE CP

Z/BV	.1580	.3160	.6000	.8400	.9250
X/CV					
.000	.3401	.2857	.1920	.1301	.1798
.025	-.3441	-.5373	-.7233	-.8599	-.9237
.050	-.3905	-.5620	-.7327	-.9001	-.9528
.150	-.0584	-.4806	-.6398	-.7330	-.8503
.300	-.2477	-.3419	-.4994	-.5789	.0000
.520	-.3985	-.3929	-.4461	-.5344	-.4289
.685	-.3285	-.4897	-.7399	-.7409	-.6927
.775	-.2876	-.5094	-.5680	-.5664	-.5061
.900		-.3286	-.4706	-.4886	-.4131

ALPHAO(9) = 5.920 BETAO (10) = 8.130

SECTION (1)LEFT VERTICAL DEPENDENT VARIABLE CP

Z/BV	.1580	.3160	.6000	.8400	.9250
X/CV					
.000	.2750	.2056	.0831	.0184	.0723
.025	-.4518	-.6236	-.7610	-.8099	-.8945
.050	-.5191	-.6385	-.7688	-.8321	-.9248
.150	-.1497	-.6027	-.7534	-.7524	-.8494
.300	-.2891	-.4749	-.6351	-.6895	.0000
.520	-.4387	-.4235	-.6398	-.6278	-.5687
.685	-.3404	-.4767	-.7267	-.5532	-.5583
.775	-.3130	-.4344	-.6588	-.5122	-.5375
.900		-.3097	-.5822	-.5127	-.4955

[illegible] LEFT VERTICAL [illegible]

ALPHAC(10) = 5.980 BETAC(11) = [illegible]

SECTION (1)LEFT VERTICAL DEPENDENT VARIABLE CP

Z/BV	.1580	.3160	.6000	.8400	.9250
X/CV					
.000	.1804	.0724	-.0599	-.1546	-.0694
.025	-.4925	-.6950	-.8236	-.8247	-.7544
.050	-.5712	-.7059	-.8290	-.8456	-.7923
.150	-.2824	-.7200	-.8075	-.7880	-.7476
.300	-.3782	-.6482	-.7500	-.7881	.0000
.520	-.4379	-.4363	-.7517	-.6439	-.6974
.685	-.3660	-.4407	-.7538	-.6517	-.6425
.775	-.3509	-.3651	-.7361	-.6501	-.6244
.900		-.3214	-.6844	.6703	-.6578

ALPHAC(10) = 8.080 BETAC(1) = -9.950

SECTION (1)LEFT VERTICAL DEPENDENT VARIABLE CP

B/	.1580	.3160	.6000	.8400	.9250
X/CV					
.000	.2789	.0877	-.0029	-.0563	-.1467
.025	.3244	.4049	.4306	.4010	.3607
.050	.3157	.3641	.3864	.3694	.3324
.150	.1917	.2716	.2929	.2758	.2077
.300	.0857	.1923	.2235	.1948	.0773
.520	-.0063	.0569	.0207	-.0563	-.1313
.685	-.5525	-.6217	-.61[illegible]5	-.6262	-.6824
.775	-.3282	-.5116	-.5450	-.6072	.6485
.900		-.3246	-.4439	.5403	-.6152

ALPHA(10) = 8.110 BETA(2) = -7.950

SECTION (1)LEFT VERTICAL DEPENDENT VARIABLE CP

Z/BV	.1580	.3160	.6000	.8400	.9250
X/CV					
.000	.4445	.1812	.1206	.0894	-.0025
.025	.3082	.3359	.3550	.3437	.3330
.050	.2908	.2960	.3107	.3104	.2970
.150	.1631	.2062	.2193	.2242	.1824
.300	.0686	.1352	.1502	.1488	.0504
.520	-.0279	.0087	-.0385	-.0683	-.1760
.685	-.5589	-.6619	-.6410	.6464	-.7075
.775	-.3580	-.5700	-.5925	-.6249	-.6844
.900		-.3271	.5027	.5897	-.6594

ARC11-716 IA14 O1+T12+S12N25+AT10 LEFT VERTICAL (GB1V32)

ALPHAO(10) = 8.130 BETAO(3) = -5.940

SECTION (1)LEFT VERTICAL DEPENDENT VARIABLE CP

Z/BV	.1580	.3160	.6000	.8400	.9250
X/CV					
.000	.5007	.2386	.2144	.1870	.1246
.025	.2429	.2018	.2523	.2717	.2631
.050	.2480	.1855	.2256	.2424	.2310
.150	.1267	.1164	.1434	.1534	.1102
.300	.0120	.0600	.0875	.0971	.0183
.520	-.0715	.0594	-.0853	-.0973	-.2002
.685	-.5070	-.7029	-.6920	-.6702	-.7421
.775	-.3590	.5544	-.6663	-.6582	-.7265
.900		-.3539	-.6040	-.6451	-.7100

ALPHAO(10) = 7.980 BETAO(4) = -3.970

SECTION (1)LEFT VERTICAL DEPENDENT VARIABLE CP

Z/BV	.1580	.3160	.6000	.8400	.9250
X/CV					
.000	.5160	.3020	.2824	.2487	.2115
.025	.1534	.0778	.1274	.1556	.1536
.050	.2057	.0910	.1219	.1324	.1350
.150	.0845	.0163	.0623	.0704	.0402
.300	-.0601	-.0023	.0174	.0176	-.0322
.520	-.1046	-.1116	-.1287	-.1393	-.2329
.685	-.4649	-.7295	-.7010	-.7163	-.7540
.775	-.3713	-.5121	-.6972	-.7072	-.7417
.900		-.3795	-.6626	-.7100	-.7402

ALPHAO(10) = 8.010 BETAO(5) = -1.970

SECTION (1)LEFT VERTICAL DEPENDENT VARIABLE CP

Z/BV	.1580	.3160	.6000	.8400	.9250
X/CV					
.000	.5583	.3539	.3247	.2897	.2877
.025	.0180	-.0904	-.0839	.0026	-.0352
.050	.1519	.0391	-.0208	.0210	.0071
.150	.0474	-.0647	-.0241	-.0180	-.0416
.300	-.1106	-.0988	-.0282	-.0563	-.0465
.520	-.1551	-.1573	-.1869	-.1730	-.2582
.685	-.4529	-.7386	-.7377	-.7386	-.7830
.775	-.3410	-.4971	-.7372	-.7345	-.7758
.900		-.4065	-.6884	-.7447	-.7634

[illegible]

[illegible] LEFT VERTICAL [illegible]

ALPHA = [illegible] BETA [illegible] = .06[illegible]

SECTION [illegible] LEFT VERTICAL DEPENDENT VARIABLE [illegible]

Z/B[illegible]	[illegible]	[illegible]	.6000	.54[illegible]	.4250
X/C[illegible]					
.000	.5364	.3673	.3517	.2947	.5225
.025	-.0964	-.2518	-.3392	-.3299	-.3342
.050	.1418	-.0917	-.3038	-.2588	.3215
.150	.0143	-.1187	-.1393	-.1079	-.1.37
.300	-.1534	-.1837	-.1201	-.1191	-.1406
.320	-.2353	-.2114	-.2173	[illegible]	-.2675
.585	-.4416	-.6933	-.7488	-.7471	-.7789
.775	-.3278	-.4806	-.7486	-.7441	-.7740
.900		-.4259	-.4852	-.7502	-.7606

ALPHA([illegible]) = 7.970 BETA([illegible]) = 2.050

SECTION ([illegible]) LEFT VERTICAL DEPENDENT VARIABLE CP

Z/B[illegible]	.1580	.3160	.6000	.9400	.9250
X/C[illegible]					
.000	.5550	.3634	.3145	.2445	.2761
.025	-.1830	-.4092	-.6429	-.6712	-.6020
.050	.0542	-.3926	-.6224	-.6623	-.6065
.150	-.0179	-.1810	-.2312	-.2644	-.3613
.300	-.1971	-.2501	-.2061	-.2180	-.2150
.320	-.3087	-.2884	-.2632	-.2449	-.2769
.585	.4549	.6083	-.7490	.7511	-.7724
.775	-.3041	-.4548	-.7548	-.7565	.7639
.900		-.4568	-.4411	-.6498	-.7462

ALPHA([illegible]) = 7.950 BETA([illegible]) = 4.080

SECTION [illegible] LEFT VERTICAL DEPENDENT VARIABLE CP

Z/B[illegible]	.1580	.3160	.6000	.9400	.9250
X/C[illegible]					
.000	.5092	.3289	.2678	.1669	.2596
.025	-.2066	-.4656	-.7052	-.8433	.8500
.050	-.2229	-.4799	-.7372	-.8725	-.8594
.150	-.1743	-.2701	-.4373	-.6846	.7459
.300	-.2310	-.3013	-.5489	-.5429	.5513
.320	.3765	-.5594	-.5338	-.5442	-.2409
.585	-.4110	-.497[illegible]	-.7501	-.7817	-.7552
.775	-.2[illegible]	.51[illegible]5	-.5594	-.7538	-.7654
.900		.4[illegible]	.4148	.4958	-.5[illegible]6

ARC11-716 IA14 C1+T12+S12N25+AT10 LEFT VERTICAL (FB1V32)

ALPHAO(10) = 7.920 BETAO (9) = 8.110

SECTION (1)LEFT VERTICAL DEPENDENT VARIABLE CP

Z/BV	.1580	.3180	.6000	.8400	.9250
X/CV					
.000	.4887	.2784	.2041	.0928	.1416
.025	-.3362	-.5420	-.7215	-.8575	-.9188
.050	-.3673	-.5665	-.7312	-.8953	-.9503
.150	-.2789	-.4867	-.6442	-.7564	-.8510
.300	-.2859	-.3472	-.5413	-.5973	-.5968
.520	-.4193	-.4071	-.4428	-.5445	-.4449
.685	-.3512	-.4790	-.7055	-.6872	-.6504
.775	-.2855	-.5230	-.5398	-.5534	-.4760
.900		-.3260	-.4652	-.4668	-.4272

ALPHAO(10) = 7.910 BETAO (10) = 8.160

SECTION (1)LEFT VERTICAL DEPENDENT VARIABLE CP

Z/BV	.1580	.3180	.6000	.8400	.9250
X/CV					
.000	.4654	.2137	.1217	-.0239	.0340
.025	-.4132	-.6270	-.7612	-.8261	-.8763
.050	-.3945	-.6390	-.7704	-.8492	-.9120
.150	-.1488	-.6119	-.7508	-.7855	-.8309
.300	-.3023	-.4235	-.6700	-.7214	-.7390
.520	-.4638	-.4301	-.6175	-.6391	-.5963
.685	-.3577	-.4835	-.6995	-.5593	-.5786
.775	-.2945	-.4215	-.6294	-.5453	-.5691
.900		-.3104	-.5689	-.5573	-.5218

ALPHAO(10) = 8.080 BETAO (11) = 10.180

SECTION (1)LEFT VERTICAL DEPENDENT VARIABLE CP

Z/BV	.1580	.3180	.6000	.8400	.9250
X/CV					
.000	.3011	.1214	-.0074	-.1955	-.1099
.025	-.5054	-.7052	-.8237	-.8420	-.8023
.050	-.1774	-.7179	-.8314	-.8643	-.8091
.150	-.2255	-.7540	-.8140	-.8376	-.7734
.300	-.3945	-.4300	-.7[illegible]	[illegible]85	-.7564
.520	.5537	-.6598	-.7[illegible]	[illegible]05	-.7466
.685	.5817	-.4095	-.741	.6886	.7019
.775	.5524	-.3610	-.7241	-.6861	-.6891
.900		-.3464	-.6658	-.6929	.7289

[illegible] DYNAMIC LEFT VERTICAL PG. 32

[illegible] = [illegible]

SECTION (1) LEFT VERTICAL DEPENDENT VARIABLE [illegible]

Z/B	.1580	.3160	.6000	.8400	.9250
X/C					
.000	.3215	.1759	-.0041	-.0802	-.1884
.025	-.2582	.3873	.3906	.3690	.2016
.050	-.0971	.3413	.3459	.3408	.3103
.150	-.113	.2379	.2575	.2553	.1870
.300	-.1220	.1524	.2039	.1657	.0668
.525	-.1181	.0261	.0149	-.0708	-.1470
.675	-.3759	-.6364	-.6212	-.6506	-.6894
.775	-.3793	-.5520	-.5548	-.6124	-.6495
.900		-.2691	-.4488	-.5434	-.6171

ALPHA0 (1) = 9.850 BETA0 (2) = -7.950

SECTION (1) LEFT VERTICAL DEPENDENT VARIABLE CP

Z/B	.1580	.3160	.6000	.8400	.9250
X/C					
.000	.5068	.2038	.0970	.0474	-.0599
.025	.0598	.3103	.3258	.3103	.1689
.050	.1275	.2804	.2840	.2816	.2802
.150	.3540	.1856	.1923	.2036	.1515
.300	-.0458	.1227	.1264	.1299	.0711
.525	-1.157	-.3570	-.2546	-.0874	-.1843
.675	-.5822	-.6648	-.6494	-.6810	-.7108
.775	-.4146	-.6264	-.5985	-.6411	-.6835
.900		.3137	-.5141	-.6014	-.6674

ALPHA (1) = 9.850 BETA (3) = 5.920

SECTION (1) LEFT VERTICAL DEPENDENT VARIABLE CP

Z/B	.1580	.3160	.6000	.8400	.9250
X/C					
.000	.5115	.2449	.1842	.1485	.0836
.025	.1454	.1734	.2231	.2395	.0780
.050	.1882	.1621	.1913	.2092	.2074
.150	.0822	.0878	.1161	.1219	.0825
.300	-.0485	.0441	.0771	.0629	.0145
.525	-.997	.3603	-.0989	-.1199	-.2[illegible]
.675	-.5509	-.7082	-.7040	-.6824	-.7[illegible]
.775	-.4067	-.6153	-.6767	-.6717	-.7[illegible]
.900		.3605	-.6184	-.6566	-.7[illegible]

ORIGINAL PAGE IS
OF POOR QUALITY

ARC11-716 IA14 OL+T12+S12N25+AT10 LEFT VERTICAL (RB1V32)

ALPHAC(11) = 9.980 BETAC (4) = -3.970

SECTION (1)LEFT VERTICAL DEPENDENT VARIABLE CP

X/CV \ Z/BV	.1580	.3160	.6000	.8400	.9250
.000	.5030	.2829	.2494	.2051	.1675
.025	.0818	.0466	.0975	.1316	-.0195
.050	.1726	.0647	.0950	.1105	.1274
.150	.0462	-.0145	.0569	.0499	.0171
.300	-.1032	-.0306	-.0019	-.0027	-.0302
.520	-.1120	-.1211	-.1413	-.1585	-.2545
.685	-.4799	-.7365	-.7145	-.7244	-.7701
.775	-.3645	-.5175	-.7079	-.7214	-.7566
.900		-.3863	-.6720	-.7214	-.7497

ALPHAC(11) = 9.950 BETAC (5) = -1.970

SECTION (1)LEFT VERTICAL DEPENDENT VARIABLE CP

X/CV \ Z/BV	.1590	.3160	.6000	.8400	.9250
.000	.5399	.3347	.2942	.2479	.2446
.025	-.0299	-.1144	-.1208	-.0289	-.1666
.050	.1343	.0212	-.0560	-.0084	.0114
.150	.0232	-.0923	-.0609	-.0422	-.0628
.300	-.1415	-.1334	-.0492	-.0798	-.0773
.520	-.1837	-.1685	-.2028	-.1911	-.2714
.685	-.4510	-.7250	-.7456	-.7410	-.7846
.775	-.3299	-.4867	.7478	-.7408	-.7767
.900		-.4034	-.6300	-.7476	-.7696

ALPHAC(11) = 9.990 BETAC (6) = .030

SECTION (1)LEFT VERTICAL DEPENDENT VARIABLE CP

X/CV \ Z/BV	.1580	.3160	.6000	.8400	.9250
.000	.5184	.3421	.2932	.2514	.2743
.025	-.1098	-.2682	-.3679	-.3575	-.3603
.050	.1242	-.1187	-.3493	-.2970	-.3358
.150	.0020	-.1431	-.1700	-.1544	-.1379
.300	-.1797	-.2128	-.1458	-.1414	-.1290
.520	-.2833	-.2415	-.2419	-.2082	-.2949
.685	-.4420	-.6656	-.7583	-.7482	-.7841
.775	-.3168	.4567	-.7621	-.7485	-.7795
.900		-.4374	-.4440	-.5691	-.5458

[illegible]

[illegible] PAGE [illegible] 4

[illegible] DEPENDENT VARIABLE CP

[illegible]	.1580	.3160	.6000	.8400	.9250
[illegible]					
[illegible]	.5344	.3441	.2786	.2021	[illegible]
[illegible]	.1751	.4168	.6347	.6044	.5416
[illegible]	.0285	.4013	.6066	.6635	.6579
[illegible]	-.0261	-.1364	-.2666	.2716	[illegible]
[illegible]	.2113	-.2630	-.2236	.2581	[illegible]
[illegible]	.5274	-.3072	-.2872	.2659	[illegible]
.685	-.4737	-.5941	-.7595	-.7489	-.7747
.775	-.5003	-.4619	-.7413	-.7489	-.7648
.900		-.4599	-.4260	-.4788	[illegible]

ALPHA (11) = 9.000 BETA (8) = 4.000

SECTION (11) LEFT VERTICAL DEPENDENT VARIABLE CP

Z/B	.1580	.3160	.6000	.8400	.9250
Y/C					
.000	.5027	[illegible]	.2291	.1272	.1678
.025	-.1990	-.4780	-.7119	-.8444	-.8636
.050	-.1787	-.4945	-.7404	-.8793	-.8717
.150	-.0741	-.2734	-.4841	-.6436	-.6079
.300	-.2479	-.5153	-.5574	-.5412	-.5940
.525	.5179	.5827	[illegible]	.5686	[illegible]
.685	.4518	.5697	.7669	[illegible]	[illegible]
.775	.2741	.5266	.5278	[illegible]	[illegible]
.900		[illegible]	[illegible]	[illegible]	[illegible]

ALPHA (11) = 10.040 BETA (8) = 6.140

SECTION (11) LEFT VERTICAL DEPENDENT VARIABLE CP

Z/B	.1580	.3160	.6000	.8400	.9250
Y/C					
.000	.5121	.2717	.1678	.0488	.0921
.025	-.2985	.5541	-.7330	-.8539	-.8874
.050	-.3130	-.5724	-.7463	-.8669	-.9206
.150	[illegible]	-.4831	-.6697	-.7641	-.8260
.300	-.2764	-.3481	-.5850	-.6266	-.6104
.525	-.4344	-.4314	.4465	-.5363	-.4748
.685	-.3344	-.5004	-.7175	-.6081	[illegible]
.775	-.2914	-.5733	-.5584	[illegible]	[illegible]
.900		-.3543	-.4604	-.4535	-.4574

AFC11-716 TA14 3L+T12+S12N25+AT10 LEFT VERTICAL (RB1V32)

ALPHA(11) = 10.090 BETA(10) = 8.160

SECTION (5)LEFT VERTICAL DEPENDENT VARIABLE CP

Z/BV	.1580	.3160	.6000	.8400	.9250
X/CV					
.000	.4450	.2271	.0934	-.0757	-.0279
.025	-.2750	-.6496	-.7728	-.8210	-.8703
.050	-.1215	-.6846	-.7802	-.8443	-.9002
.150	-.1571	-.6219	-.7644	-.7672	-.8473
.300	-.3076	-.3576	-.6795	-.7425	-.7914
.525	-.4715	.4632	-.6214	-.6659	-.6677
.685	-.5724	-.4998	-.6966	-.5884	-.6179
.775	-.5021	-.4774	-.6288	-.5783	-.5878
.900		-.5419	-.5514	-.5942	-.5550

ALPHA(11) = [illegible] BETA(11) = 10.250

SECTION (5)LEFT VERTICAL DEPENDENT VARIABLE CP

Z/BV	.1580	.3160	.6000	.8400	.9250
X/CV					
.000	.0575	.1914	[illegible]	.2148	.1418
.025	-.5209	-.7148	-.8258	-.8309	-.8039
.050	-.1520	-.7276	-.8254	-.8549	-.8064
.150	-.1922	-.6496	-.8178	-.8349	-.7753
.300	-.3680	-.3751	-.7807	-.8279	-.7649
.525	-.5197	-.4350	-.7291	-.7204	-.7642
.685	-.5947	-.4450	-.7435	-.6877	-.7063
.775	-.5503	-.3818	-.7142	-.6812	-.7053
.900		-.3812	-.6488	-.6940	-.7474

	.3160	.6030	.8400	.9250	
.000	.5242	.8808	.4317	.5198	.4401
[illegible]	.8449	.8090	.7956	.7771	.6118
[illegible]	.8027	.7527	.7453	.7345	.7118
[illegible]	.6680	.6445	.6266	.6215	.5512
[illegible]	.5778	.5393	[illegible]	.5007	.4420
[illegible]	.3565	.3140	.2243	.2507	.1753
[illegible]	-.2561	-.3594	-.3736	-.4175	-.4268
[illegible]	[illegible]	[illegible]	[illegible]	-.5458	-.5341
[illegible]		-.3781	-.2520	-.5404	-.5680

[illegible] .3160 [illegible] .9250

	.1594	.3160	.6030	.8400	.9250
[illegible]	.8151	.4960	.5450	.6128	.5273
[illegible]	[illegible]	.7178	[illegible]	[illegible]	.5267
[illegible]	[illegible]	.6914	.6746	.6623	.6432
[illegible]	.5966	.5783	.5622	.5512	.4896
[illegible]	.4128	.4794	.4717	.4655	[illegible]
[illegible]	.3561	.2835	.2746	.2156	[illegible]
[illegible]	-.2744	-.3695	-.5955	-.4247	.4558
[illegible]	[illegible]	.3578	.3466	-.3792	.4550
[illegible]		-.2299	.3147	-.3861	-.4147

ARC11 716 TA14 [illegible]ATIC LEFT VERTICAL (RB1V33)

ALPHAC 1/ = -10.290 BETAC 1/ = -5.920

SECTION 1 LEFT VERTICAL DEPENDENT VARIABLE CP

Z/BV	.1580	.3180	.6000	.8400	.9250
X/CV					
.000	.6765	.5833	.6362	.6879	.6259
.025	.6956	.6202	.6408	.6515	.4481
.050	.6545	.5952	.6013	.5977	.5965
.150	.5233	.5049	.5046	.4992	.4431
.350	.4250	.4258	.4246	.4041	.3694
.525	.2464	.2596	.2347	.1[illegible]64	.0894
.675	-.2[illegible]	-.4207	-.4128	-.4506	-.4696
.775	-.2551	-.3917	-.3852	-.4052	-.4550
.975		-.2831	-.3559	-.4165	-.4424

ALPHA 1/ = -10.240 BETA 4 = -3.980

SECTION 1 LEFT VERTICAL DEPENDENT VARIABLE CP

Z/BV	.1580	.3180	.6000	.8400	.9250
X/CV					
.000	.7[illegible]	.6473	[illegible]	.7573	.6931
.025	.5[illegible]5	.4655	.4[illegible]	.5256	.3450
.050	.5684	.4707	.4955	.5081	.5294
.150	.4404	.4[illegible]03	.4219	.4292	.3950
.350	.3251	.3471	.3573	.3548	.3393
.525	.2298	.1[illegible]7	.1978	.1740	[illegible]
.675	-.3[illegible]9	-.4543	-.4540	-.4874	-.4814
.775	-.2540	-.4255	-.4129	-.4267	-.4743
.975		-.3091	-.3935	-.4[illegible]30	-.4653

ALPHAC 1/ = -10.290 BETAC 5/ = -1.970

SECTION 1 LEFT VERTICAL DEPENDENT VARIABLE CP

Z/BV	.1580	.3180	.6000	.8400	.9250
X/CV					
.000	.7772	.6382	.7442	.7685	.7534
.025	.4215	.2745	.2649	.3451	.1483
.050	.5[illegible]4	.3713	.327[illegible]	.3710	.3697
.150	.3[illegible]1	.2548	.3145	.3340	.3461
.350	.2528	.2458	.3137	.2910	.3[illegible]45
.525	.1558	.1398	.1405	.1452	.1572
.675	-.3529	-.4897	-.4564	-.4847	.4812
.775	.2508	.4596	-.4365	-.4505	.4785
.975		-.3415	.4350	-.4679	.4477

(RB1V35)

ALPHAC(1) = -10.160 BETAC(8) = .000

SECTION (1)LEFT VERTICAL DEPENDENT VARIABLE CP

Z/BV	.1580	.3160	.6000	.8400	.9250
X/CV					
.000	.7275	.7182	.7554	.7560	.7728
.025	.2202	.0505	-.0553	-.0968	-.1233
.050	.4[illegible]	.2193	-.0261	.0657	-.0473
.150	.5166	.1995	.1934	.2060	.2132
.300	.1544	.1534	.2094	.1862	.2374
.520	.0947	.0762	.0794	.1052	.0465
.685	-.5431	-.5123	-.4775	-.5036	-.4724
.775	-.2707	-.4990	-.4713	-.4813	-.4792
.900		-.3758	-.4668	-.4897	-.4457

ALPHAC(1) = -10.160 BETAC(7) = 2.040

SECTION (1)LEFT VERTICAL DEPENDENT VARIABLE CP

Z/BV	.1580	.3160	.6000	.8400	.9250
X/CV					
.000	.7743	.7070	.7350	.7048	.7352
.025	.1002	-.1612	-.4122	-.4521	-.4591
.050	.0800	-.1225	-.3828	-.4452	-.4521
.150	.2594	.1319	.0855	.0457	-.1287
.300	.1166	.0728	.1028	.0923	.1767
.520	.0192	.0074	.0246	.0436	.0295
.685	-.4158	-.5320	-.5054	-.5067	-.4741
.775	-.2887	-.5196	-.4822	-.4826	-.4791
.900		-.3914	-.4911	-.4844	-.4469

ALPHAC(1) = -10.220 BETAC(8) = 4.080

SECTION (1)LEFT VERTICAL DEPENDENT VARIABLE CP

Z/BV	.1580	.3160	.6000	.8400	.9250
X/CV					
.000	.7275	.6615	.6831	.6309	.6743
.025	.0193	-.2201	-.5269	-.6012	-.5965
.050	-.0277	-.2099	-.5311	-.5893	-.6255
.150	.1437	-.0736	-.1898	-.4441	-.4475
.300	.0764	.0005	-.0557	-.3109	-.3092
.520	-.0359	-.0476	-.0858	-.0400	-.0266
.685	-.4321	-.5434	-.5204	-.5096	-.4775
.775	-.2880	-.5335	-.5092	-.4966	-.4932
.900		-.3920	-.5134	-.4935	-.4410

ARC11-716 IA14 O1+Y12+S12N25+AT10 LEFT VERTICAL (RB1V33)

ALPHAO(1) = -10.230 BETAO (9) = 6.380

SECTION (1)LEFT VERTICAL DEPENDENT VARIABLE CP

Z/BV	.1580	.3160	.6000	.8400	.9250
X/CV					
.000	.6749	.5974	.6202	.5619	.6162
.025	-.0519	-.2838	-.4569	-.6307	-.6382
.050	-.0847	-.2843	-.4624	-.6540	-.6807
.150	-.0791	-.1973	-.3718	-.5449	-.5357
.300	.0619	-.1289	-.2546	-.4251	-.4213
.520	-.0456	-.0989	-.2549	-.2234	-.2891
.685	-.4408	-.5428	-.5403	-.5803	-.5542
.775	-.2838	-.5108	-.5366	-.5715	-.5592
.900		-.3962	-.5403	-.5692	-.5420

ALPHAO(1) = -10.230 BETAO (10) = 8.120

SECTION (1)LEFT VERTICAL DEPENDENT VARIABLE CP

Z/BV	.1580	.3160	.6000	.8400	.9250
X/CV					
.000	.6260	.5109	.5238	.4545	.5241
.025	-.1246	-.3369	-.4916	-.6419	-.6325
.050	-.1546	-.3408	-.4997	-.6879	-.7284
.150	-.2836	-.3075	-.4680	-.6024	-.6178
.300	.1713	-.2482	-.3996	-.4379	-.5108
.520	-.0849	-.2066	-.4084	-.3671	-.3837
.685	-.4942	-.5578	-.6273	-.6572	-.6225
.775	-.3421	-.5099	-.6172	-.6429	-.6382
.900		-.4199	-.5296	-.4317	-.5792

ALPHAO(1) = -10.240 BETAO (11) = 10.110

SECTION (1)LEFT VERTICAL DEPENDENT VARIABLE CP

Z/BV	.1580	.3160	.6000	.8400	.9250
X/CV					
.000	.5319	.3688	.3939	.3321	.4312
.025	-.1937	-.4015	-.5421	-.6106	-.6765
.050	-.2583	-.4155	-.5463	-.6615	-.7302
.150	-.5057	-.4326	-.5310	-.5182	-.6506
.300	-.0125	-.4077	-.4992	-.4727	-.5282
.520	-.1251	-.3731	-.5183	-.4570	-.3815
.685	-.4346	-.6169	-.6728	-.5357	-.6462
.775	-.3145	-.5358	-.5695	-.4526	-.5611
.900		-.4760	-.4749	-.3849	-.4298

AFC11-716 [illegible] LEFT VERTICAL (RBLV33)

ALPHAO (1) = -8.220 BETAO (1) = -9.9

SECTION (1)LEFT VERTICAL DEPENDENT VARIABLE CP

Z/BV	.1580	.3160	.6000	.8400	.9250
X/CV					
.000	.4973	.3575	.3821	.4370	.5751
.025	.8170	.7880	.7543	.7337	.5168
.050	.7655	.7135	.7052	.6918	.7546
.150	.6302	.6125	.5889	.5774	.5181
.300	.5219	.5079	.4943	.4685	.4164
.520	.3552	.2861	.2948	.2270	.1312
.685	-.2662	-.3767	-.3892	-.4155	-.4356
.775	.2102	-.3126	-.3376	-.3597	-.4063
.900		-.2103	-.2801	-.3560	-.3821

ALPHAO (2) = -8.240 BETAO (2) = -7.960

SECTION (1)LEFT VERTICAL DEPENDENT VARIABLE CP

Z/BV	.1580	.3160	.6000	.8400	.9250
X/CV					
.000	.5908	.4694	.5018	.5538	.4790
.025	.7335	.6795	.6828	.6666	.4529
.050	.6866	.6343	.6362	.6276	.6439
.150	.5534	.5367	.5243	.5189	.4579
.300	.4514	.4494	.4389	.4170	.3724
.520	.3083	.2544	.2438	.1910	.0756
.685	-.2939	-.4127	-.4131	-.4445	-.4699
.775	-.2101	-.3588	-.3786	-.3991	-.4490
.900		-.2368	-.3342	-.4056	-.4292

ALPHAO (2) = -8.240 BETAO (3) = -5.960

SECTION (1)LEFT VERTICAL DEPENDENT VARIABLE CP

Z/BV	.1580	.3160	.6000	.8400	.9250
X/CV					
.000	.6513	.5518	.6002	.6414	.5823
.025	.6515	.5780	.5943	.5932	.3805
.050	.6180	.5501	.5812	.5618	.5870
.150	.4793	.4627	.4651	.4645	.4094
.300	.3792	.3876	.3880	.3761	.3442
.520	.2599	.2226	.2009	.1735	.0543
.685	-.3175	-.4451	-.4285	-.4592	-.4836
.775	-.2310	-.4015	-.4024	-.4209	-.4690
.900		-.2701	-.3698	-.4308	-.4598

ARC11 716 IA14 O1+T12+S12N25+AT10 LEFT VERTICAL (RB1V33)

ALPHAO(2) = -8.250 BETAO (4) = -3.980

SECTION (1)LEFT VERTICAL DEPENDENT VARIABLE CP

Z/BV	.1580	.3160	.6000	.8400	.9250
X/CV					
.000	.7103	.6087	.6636	.6937	.6492
.025	.5397	.4194	.4559	.4899	.2801
.050	.5358	.4260	.4544	.4761	.5008
.150	.4083	.3548	.3883	.3988	.3569
.300	.2784	.3095	.3509	.3283	.3094
.520	.1986	.1659	.1667	.1523	.0402
.685	-.3454	-.4684	-.4472	-.4775	-.4928
.775	-.2481	-.4415	-.4267	-.4412	-.4850
.900		-.3078	-.4063	-.4578	-.4798

ALPHAO(2) = -8.250 BETAO (5) = -1.990

SECTION (1)LEFT VERTICAL DEPENDENT VARIABLE CP

Z/BV	.1580	.3160	.6000	.8400	.9250
X/CV					
.000	.7465	.6622	.6986	.7201	.7123
.025	.3901	.2472	.2287	.3100	.1233
.050	.4722	.3381	.2950	.3414	.3334
.150	.3527	.2559	.2827	.3058	.2811
.300	.2056	.2155	.2767	.2578	.2816
.520	.1243	.1113	.1167	.1282	.0394
.685	-.3596	-.4955	-.4641	-.4881	-.4925
.775	-.2487	-.4663	-.4461	-.4560	-.4880
.900		-.3296	-.4438	-.4754	-.4656

ALPHAO(2) = -8.250 BETAO (6) = .010

SECTION (1)LEFT VERTICAL DEPENDENT VARIABLE CP

Z/BV	.1580	.3160	.6000	.8400	.9250
X/CV					
.000	.7556	.6848	.7102	.7111	.7288
.025	.1862	.0234	-.0835	-.1033	-.1542
.050	.3933	.1927	-.0517	.0387	-.0688
.150	.2896	.1708	.1630	.1896	.1857
.300	.1402	.1190	.1791	.1701	.2107
.520	.0535	.0471	.0537	.0889	.0259
.685	-.3867	-.5299	-.4900	-.4956	-.4864
.775	-.2651	-.5083	-.4822	-.481[illegible]	-.4924
.900		-.3555	-.4801	-.4920	-.4654

[illegible]

[illegible]

[illegible]

[illegible]	[illegible]	[illegible]	.6042	[illegible]	[illegible]

X/C

[illegible]	.7490	[illegible]	.6962	[illegible]	[illegible]
[illegible]	.0727	.1151	-.4227	[illegible]	[illegible]
[illegible]	[illegible]	[illegible]	-.3968	[illegible]	.4982
[illegible]	[illegible]	[illegible]	[illegible]	[illegible]	-.0992
[illegible]	[illegible]	.5514	[illegible]	[illegible]	.1247
[illegible]	[illegible]	[illegible]	[illegible]	[illegible]	[illegible]
[illegible]	[illegible]	-.565	-.5102	[illegible]	-.474
[illegible]	[illegible]	-.5215	-.5014	[illegible]	-.4510
[illegible]		-.3750	-.5147	-.4141	-.4674

ALPHA(2) = 6.250 BETA(9) = 4.040

SECTION (1) LEFT VERTICAL DEPENDENT VARIABLE CP

Z/B =	.1580	.3160	.6000	.8400	.9250
X/C =					
.000	.7049	.6534	.6483	.5935	.6389
.025	-.0617	-.2293	-.5524	-.6007	-.6251
.050	.0510	-.2251	-.5441	-.5912	-.6297
.150	.1231	-.0792	-.1949	-.4487	-.4542
.300	.0565	-.0233	-.0645	-.2995	-.3112
.520	-.0613	-.0680	-.0998	.0512	-.0285
.695	-.3750	-.5579	-.5245	-.5166	-.4940
.775	-.2902	-.4914	-.5197	.5023	-.4955
.900		-.3716	-.5226	-.5005	-.4649

ALPHA(2) = -8.220 BETA(9) = 6.05

SECTION (1) LEFT VERTICAL DEPENDENT VARIABLE CP

Z/B =	.1580	.3160	.6000	.8400	.9250
X/C =					
.000	.6473	.5653	.5880	.5228	.5620
.025	-.0737	-.2862	-.4677	-.6194	-.6486
.050	-.1052	-.2909	-.4765	-.6437	-.6783
.150	-.0957	-.2157	-.3711	-.5553	-.5401
.300	.0450	-.1430	-.2573	-.4292	-.4288
.520	[illegible]	-.1165	-.2547	-.2284	-.2945
.695	-.3941	-.5520	-.5382	-.5791	-.5526
.775	.2635	-.4715	-.5429	-.5645	-.5612
.900		-.3928	-.5437	-.5692	-.5453

ARC11-716 IA14 O1+T12+S12N25+AT10 LEFT VERTICAL (RB1V33)

ALPHAO(2) = -8.220 BETAO (10) = 8.100

SECTION (1)LEFT VERTICAL DEPENDENT VARIABLE CP

Z/BV	.1580	.3160	.6000	.8400	.9250
X/CV					
.000	.5932	.4794	.4911	.4218	.4830
.025	-.1391	-.3379	-.3025	-.6381	-.6683
.050	-.1671	-.3442	-.5100	-.6846	-.7146
.150	-.3060	-.3119	-.4759	-.5877	-.6223
.300	.0436	-.2594	-.4059	-.4376	-.5238
.520	-.1044	-.2243	-.4119	-.3766	-.3931
.685	-.4235	-.5642	-.6271	-.6626	-.6218
.775	-.2924	-.4812	-.6201	-.6407	-.6372
.900		-.4199	-.5183	-.4309	-.5701

ALPHAO(2) = -8.220 BETAO (11) = 10.130

SECTION (1)LEFT VERTICAL DEPENDENT VARIABLE CP

Z/BV	.1580	.3160	.6000	.8400	.9250
X/CV					
.000	.3112	.3501	.3559	.2739	.3730
.025	-.2174	-.4025	-.5448	-.6123	-.6727
.050	-.2670	-.4181	-.5534	-.6572	-.7236
.150	-.5123	-.4365	-.5362	-.5576	-.6398
.300	-.0300	-.4207	-.5090	-.5059	-.5258
.520	-.1461	-.3949	-.5285	-.4874	-.3940
.685	-.4175	-.6299	-.6778	-.5320	-.6129
.775	-.3150	-.5370	-.5788	-.4422	-.4833
.900		-.4997	-.4906	-.3877	-.3768

ALPHAO(3) = -5.280 BETAO (1) = -9.970

SECTION (1)LEFT VERTICAL DEPENDENT VARIABLE CP

Z/BV	.1580	.3160	.6000	.8400	.9250
X/CV					
.000	.4909	.3527	.3480	.4023	.3228
.025	.7906	.7266	.7207	.6927	.4680
.050	.7358	.6813	.6723	.6555	.6579
.150	.5949	.5745	.5585	.5446	.4780
.300	.4886	.4845	.4688	.4371	.3770
.520	.3568	.2718	.2681	.1966	.1006
.685	.2835	-.3822	-.3994	-.4194	-.4532
.775	.2148	-.3270	-.3493	-.3767	-.4292
.900		-.2218	-.2932	-.3728	-.4091

[illegible]

[illegible] LEFT VERTICAL [illegible]

[illegible] 280 [illegible]

[illegible]

[illegible]	.1580	.3160	[illegible]	.6400	[illegible]
X/C					
000	.5718	.4482	.3760	.5.35	[illegible]
025	.5963	.6340	.6482	.6515	[illegible]
[illegible]	.5554	.5955	.601[illegible]	.5347	.6173
.150	.5163	.4946	.4955	.4417	.4326
[illegible]	[illegible]	.4153	[illegible]	.3552	[illegible]
.525	[illegible]	.2351	.2157	[illegible]	[illegible]
675	[illegible]	-.4258	.4197	.3424	.3783
775	[illegible]	-.3751	-.3864	-.4.24	-.4166
900		-.2572	-.3445	.4102	-.4419

ALPHA [illegible] = -6.300 BETA [illegible] 51 = -6.000

SECTION [illegible] (1) LEFT VERTICAL DEPENDENT VARIABLE CP

Z/BV	.1580	.3160	.6000	.8400	.9250
X/C					
000	.6329	.5232	.5684	.5988	.5479
025	.6214	.5338	.5588	.5630	.3501
[illegible]	.5913	.5093	.5261	.5296	.5635
.150	.4521	.4270	.4373	.4367	.5911
.350	.3444	.3628	.3648	.3569	.3266
.525	.2358	.2464	.1766	.1591	.0448
675	-.3534	.4453	-.4338	-.4580	-.4866
775	-.2314	-.4197	-.4398	-.4218	-.4716
900		-.2781	-.3782	-.4335	-.4656

ALPHA [illegible] 51 = -6.280 BETA [illegible] (4) = -3.980

SECTION [illegible] (1) LEFT VERTICAL DEPENDENT VARIABLE CP

Z/BV	.1580	.3160	.6000	.8400	.9250
X/C					
000	.6873	.5809	.6252	.6465	.6124
025	.5082	.3851	.4149	.4507	.2417
.050	.5031	.3908	.4152	.4356	.4770
.150	.3816	.3192	.3529	.3660	.3306
.350	.2445	.2758	.3039	.3017	.2836
.525	.1870	.1457	.1409	.1342	.0235
675	-.3830	-.4750	-.4570	-.4812	-.5000
775	-.2588	-.455	-.4384	-.4489	-.4927
900		-.3046	-.4165	-.4855	-.4906

ARC11 718 IA14 O1+T12+S12N25+AT10 LEFT VERTICAL PB1V33

ALPHA(3) = -6.100 BETA(5) = .030

SECTION (1) LEFT VERTICAL DEPENDENT VARIABLE CP

Z/BV	.1580	.3160	.6000	.8400	.9250
X/CV					
.000	.7324	.6493	.6872	.6845	.6851
.025	.1530	.0052	-.1090	-.1301	-.1784
.050	.5670	.1624	-.0792	-.0116	-.0940
.150	.2664	.1487	.1319	.1633	.1608
.500	.1180	.0976	.1479	.1458	.1973
.520	.0235	.0271	.0340	.0691	.0077
.685	-.3763	-.5356	-.4914	-.4955	-.4918
.775	-.2567	-.5003	-.4833	-.4861	-.4978
.900		-.5527	-.4856	-.4994	-.4763

ALPHA(3) = 6.320 BETA(6) = 2.000

SECTION (1) LEFT VERTICAL DEPENDENT VARIABLE CP

Z/BV	.1580	.3160	.6000	.8400	.9250
X/CV					
.000	.7202	.6442	.6556	.6214	.6569
.025	.5493	-.1839	-.4162	-.4518	-.4820
.050	.357	-.1516	.5958	-.4620	-.4614
.150	.2181	.0647	.0586	.0031	-.0404
.500	.0751	.0330	.0581	.0434	.0914
.520	-.0327	-.0364	-.0198	-.0049	-.0083
.685	.2952	-.5522	-.5122	-.5025	-.4871
.775	.2753	-.5150	-.5096	-.4979	-.4989
.900		-.5648	-.5125	-.5041	-.4826

ALPHA(3) = 6.330 BETA(7) = 4.070

SECTION (1) LEFT VERTICAL DEPENDENT VARIABLE CP

Z/BV	.1580	.3160	.6000	.8400	.9250
X/CV					
.000	.6752	.6027	.6082	.5528	.5954
.025	-.0267	-.2450	-.5617	-.6051	-.6295
.050	-.0718	-.2380	-.5530	-.5996	-.6509
.150	.1086	-.0872	.2084	-.4620	-.4620
.500	.0342	.0310	-.0695	-.2611	-.3102
.520	-.0854	.0933	-.1124	.0465	-.0182
.685	.3850	-.5742	-.5313	-.5218	-.4833
.775	-.2662	-.4959	-.5295	.5057	-.4956
.900		-.5719	-.5337	.5126	.4717

[illegible] VERTICA [illegible]

[illegible] BETA [illegible]

SECTION [illegible] LEFT VERTICAL DEPENDENT VARIABLE [illegible]

Z/BV	.1500	.3160	.6000	.8400	.9250
X/CV					
.000	.6294	.5488	.5566	.4987	.54[illegible]
.025	.[illegible]842	.2861	-.4848	-.7275	.55[illegible]
.050	-.1157	.2976	.4950	-.5518	-.6[illegible]
.150	.[illegible]	.2171	-.3711	.3685	.5553
.300	.2[illegible]	-.1356	-.2635	-.4364	.4363
.500	[illegible]	.1303	-.0[illegible]	-.2098	-.0465
.685	-.5[illegible]2	-.5747	-.5675	-.5819	.5616
.775	.2[illegible]2	-.4675	-.5556	.5[illegible]	.5602
.900		-.5802	-.5595	.5[illegible]	[illegible]

ALPHA [illegible] = -0.250 BETA [illegible] = [illegible]

SECTION [illegible] LEFT VERTICAL DEPENDENT VARIABLE [illegible]

Z/BV	.1500	.3160	.6000	.8400	[illegible]
X/CV					
.000	.5[illegible]4	.4638	.4624	.3750	.44[illegible]
.025	-.652	-.5512	.5218	-.6712	-.7050
.050	-.1665	-.5611	.5312	-.7185	-.7492
.150	.5092	-.5247	.4929	-.6212	-.6583
.300	.2289	-.2[illegible]9	-.4178	-.4731	-.5425
.500	-.1552	.2458	.4184	-.4514	.4139
.685	.4126	.5747	.6542	-.6[illegible]	-.[illegible]
.775	-.2854	-.4706	-.6290	-.6468	-.6451
.900		-.4282	-.5082	-.4513	-.5425

ALPHA [illegible] = -0.260 BETA [illegible] = 10.09[illegible]

SECTION [illegible] LEFT VERTICAL DEPENDENT VARIABLE [illegible]

Z/BV	.1500	.3160	.6000	.8400	.9250
X/CV					
.000	.4934	.3319	.3268	.2344	.3295
.025	-.2410	-.4018	-.5585	-.6127	-.6680
.050	-.2779	-.4196	-.3647	-.6521	-.7113
.150	-.1109	-.4374	-.5477	-.5816	-.6262
.300	-.0509	-.4206	-.5182	-.5215	-.5[illegible]25
.500	-.1682	-.4[illegible]15	.5352	-.5002	-.5952
.685	-.4[illegible]65	-.6511	-.6775	-.5501	-.6101
.775	-.3[illegible]23	-.5248	-.5835	-.4468	-.4667
.900		-.4848	-.5010	-.4059	-.3748

ARC11-718 (A14 OL+T12+S12N25+AT10 LEFT VERTICAL (RB1V33)

ALPHAC (4) = -4.200 BETAC (1) = -9.680

SECTION 1) LEFT VERTICAL DEPENDENT VARIABLE CP

Z/BV	.1580	.3160	.6000	.8400	.9250
X/CV					
.000	.4921	.3165	.3291	.3638	.2755
.025	.7435	.6745	.6759	.6544	.4226
.050	.6934	.6330	.6301	.6171	.5131
.150	.5461	.5345	.5209	.5126	.4483
.300	.4451	.4457	.4401	.4079	.3612
.520	.3[illegible]57	.2434	.2272	.1726	.0737
.685	-.3[illegible]97	-.4[illegible]	-.4112	-.4376	-.4686
.775	-.2254	-.3[illegible]3	-.3847	-.4018	-.4451
.900		-.3[illegible]	-.3115	-.3956	-.4245

ALPHAC (4) = -4.230 BETAC (2) = -7.990

SECTION 1) LEFT VERTICAL DEPENDENT VARIABLE CP

Z/BV	.1580	.3160	.6000	.8400	.9250
X/CV					
.000	.5516	.4215	.4475	.4666	.3949
.025	.6645	.5924	.6129	.5950	.3684
.050	.6190	.5523	.5[illegible]1	.5589	.5735
.150	.4768	.4645	.4[illegible]2	.4594	.4[illegible]1
.300	.3767	.3871	.3858	.3684	.3458
.520	.2610	.2138	.1865	.1548	.0655
.685	-.3211	-.4340	-.4270	-.4504	-.4842
.775	-.2335	-.3897	-.3958	-.4183	-.4677
.900		-.2659	-.3549	-.4232	-.4535

ALPHAC (4) = -4.100 BETAC (3) = -3.970

SECTION (1) LEFT VERTICAL DEPENDENT VARIABLE CP

Z/BV	.1580	.3160	.6000	.8400	.9250
X/CV					
.000	.6143	.5022	.5369	.5529	.5037
.025	.5810	.4745	.5075	.5153	.5100
.050	.5514	.4819	.4810	.4848	.5236
.150	.4143	.3822	.3959	.3983	.3559
.300	.3304	.3205	.3331	.3248	.3058
.520	.2[illegible]02	.1770	.1512	.1327	.0414
.685	-.3614	-.4704	-.4502	-.4738	-.5120
.775	-.2[illegible]1	-.4326	-.4256	-.4410	-.4[illegible]7
.900		-.2843	-.3930	-.4329	-.4925

ORIGINAL PAGE IS OF POOR QUALITY

65	.5549	.5436	[illegible]	[illegible]	.5676
[illegible]	.4664	.5435	.5697	[illegible]	[illegible]
[illegible]	[illegible]	.5441	[illegible]	.595	[illegible]
[illegible]	[illegible]	.2775	[illegible]	.3265	[illegible]
[illegible]	[illegible]	.2591	.2718	[illegible]	.2676
[illegible]	[illegible]	.1285	[illegible]	[illegible]	[illegible]
685	-.5654	-.4371	-.4446	-.4845	-.5118
775	.2435	-.4679	-.4458	-.4613	-.5347
.930		-.3107	-.4276	-.4787	-.5345

ALPHA 4 = 4.190 BETA 51 = 2.020

SECTION (1) EFT VERTICAL DEPENDENT VARIABLE CP

Z/BV	.1580	.3160	.6000	.8400	.9250
X/CV					
.000	[illegible]	[illegible]	.6265	.5212	.6254
.025	.3038	.1806	.1652	.2412	.0838
.050	[illegible]	.2025	.2275	.2751	.2441
.150	.2946	[illegible]	.2194	.2404	.2224
.300	.1535	.1524	.2271	.2129	.2418
.525	[illegible]	[illegible]	.1656	[illegible]	.0385
.675	[illegible]	[illegible]	.3772	[illegible]	[illegible]
.775	.2452	.4880	-.4680	-.4772	[illegible]
.930		-.3275	-.4648	.4946	[illegible]

ALPHA 4 = -4.080 BETA 61 = -.010

SECTION (1) EFT VERTICAL DEPENDENT VARIABLE CP

Z/BV	.1580	.3160	.6000	.8400	.9250
X/CV					
.000	[illegible]	.6170	.6285	.6183	.6427
.025	.1526	.0164	-.1179	-.1490	-.1788
.050	.3460	.1217	.0802	-.0544	-.1038
.150	.2446	.1258	.1064	.1344	.1460
.300	.0975	.0815	.1325	.1256	.1968
.525	-.0318	.0005	.0166	.0453	[illegible]
.675	.5689	.5401	.4912	-.4964	.5037
.775	.2529	-.4915	-.4867	.4417	.5068
.930		.3597	.4888	.5144	.4892

ARC11-P16 IA14 (R+T12+S12N25+AT10 LEFT VERTICAL (B1V33)

ALPHA(4) = -4.210 BETA(7) = 2.110

SECTION 5 LEFT VERTICAL DEPENDENT VARIABLE CP

Z/BV	.1580	.3160	.6000	.8400	.9250
R/CV					
.000	.6859	.6124	.6132	.5715	.6089
.025	.3195	-.2015	-.4148	-.4610	-.4856
.050	.0078	-.1709	-.3976	-.4724	-.4811
.150	.1942	.0859	.0156	-.0332	.0604
.500	.0525	.0033	.0414	.0147	.0846
.525	-.0613	.0613	.0452	-.0508	-.0287
.675	-.3747	[illegible]	-.5154	-.5022	-.4948
.775	-.2664	-.4848	-.5170	-.5046	-.5084
.900		-.5[illegible]5	.5183	-.5145	-.4959

ALPHA(4) = -4.210 BETA(8) = 4.090

SECTION 5 LEFT VERTICAL DEPENDENT VARIABLE CP

Z/BV	.1580	.3160	.6000	.8400	.9250
R/CV					
.000	.6422	.5731	.5699	.5465	.5491
.025	.0557	-.2542	-.5076	-.6043	-.6280
.050	-.0076	-.2488	-.5555	-.6019	-.6478
.150	.0955	.0926	-.2122	-.4681	-.4745
.500	-.0551	-.0514	-.0790	-.2318	-.3103
.525	-.1107	-.1168	-.1256	-.0814	-.0399
.675	.5849	.5856	-.5522	-.5243	-.4886
.775	-.2645	-.4752	-.5404	-.5106	-.5025
.900		-.5647	-.5472	-.5090	-.4889

ALPHA(4) = -4.210 BETA(9) = 8.060

SECTION 5 LEFT VERTICAL DEPENDENT VARIABLE CP

Z/BV	.1580	.3160	.6000	.8400	.9250
R/CV					
.000	.5947	.5256	.5212	.4457	.4988
.025	-.1020	-.2928	-.4915	-.6271	-.6658
.050	-.1547	-.3079	-.5050	-.6555	-.7124
.150	-.0906	-.2528	.5631	.5775	[illegible]
.500	.0084	-.1415	.5596	.4419	-.4547
.525	.1134	-.1524	.2522	-.2353	.2756
.675	.5997	-.5850	.5462	.5854	[illegible]
.775	.2718	-.4997	.5573	.5775	-.5654
.900		.5729	-.5623	-.5815	-.5580

	[illegible]	[illegible]	[illegible]	[illegible]	[illegible]
[illegible]					
[illegible]	[illegible]	[illegible]	[illegible]	[illegible]	[illegible]
[illegible]	[illegible]	[illegible]	[illegible]	[illegible]	[illegible]
[illegible]	[illegible]	[illegible]	[illegible]	[illegible]	[illegible]
[illegible]	[illegible]	[illegible]	[illegible]	[illegible]	[illegible]
[illegible]	[illegible]	[illegible]	[illegible]	[illegible]	[illegible]
[illegible]	[illegible]	[illegible]	[illegible]	[illegible]	[illegible]
[illegible]	[illegible]	[illegible]	[illegible]	[illegible]	[illegible]
[illegible]	[illegible]	[illegible]	[illegible]	[illegible]	[illegible]
[illegible]	[illegible]	[illegible]	[illegible]	[illegible]	[illegible]
[illegible]	[illegible]	[illegible]	[illegible]	[illegible]	[illegible]
[illegible]	[illegible]	[illegible]	[illegible]	[illegible]	[illegible]
[illegible]	[illegible]	[illegible]	[illegible]	[illegible]	[illegible]
[illegible]	[illegible]	[illegible]	[illegible]	[illegible]	[illegible]

ALPHA [illegible] 4.160 BETA [illegible] = [illegible]

SECTION [illegible] DEPENDENT VARIABLE [illegible]

[illegible]	[illegible]	[illegible]	[illegible]	[illegible]	[illegible]
[illegible]	[illegible]	[illegible]	[illegible]	[illegible]	[illegible]
[illegible]	[illegible]	[illegible]	[illegible]	[illegible]	[illegible]
[illegible]	[illegible]	[illegible]	[illegible]	[illegible]	[illegible]
[illegible]	[illegible]	[illegible]	[illegible]	[illegible]	[illegible]
[illegible]	[illegible]	[illegible]	[illegible]	[illegible]	[illegible]
[illegible]	[illegible]	[illegible]	[illegible]	[illegible]	[illegible]
[illegible]	[illegible]	[illegible]	[illegible]	[illegible]	[illegible]
[illegible]	[illegible]	[illegible]	[illegible]	[illegible]	[illegible]
[illegible]	[illegible]	[illegible]	[illegible]	[illegible]	[illegible]
[illegible]	[illegible]	[illegible]	[illegible]	[illegible]	[illegible]
[illegible]	[illegible]	[illegible]	[illegible]	[illegible]	[illegible]
[illegible]	[illegible]	[illegible]	[illegible]	[illegible]	[illegible]
[illegible]	[illegible]	[illegible]	[illegible]	[illegible]	[illegible]

ALPHA 5 = 2.870 BETA [illegible] = 10.040

SECTION [illegible] DEPENDENT VARIABLE [illegible]

[illegible]	1580	3160	6000	.8400	.9250
[illegible]					
[illegible]	4749	5050	.5050	5300	.2518
[illegible]	7171	6494	6596	.6294	.3933
[illegible]	6647	6158	.6093	.5923	.5962
[illegible]	5219	5139	5044	4905	.4425
[illegible]	4226	4278	4586	.5917	.5548
[illegible]	2456	2553	.2082	.1624	[illegible]
[illegible]	5132	4030	-.6091	-.4280	-.4664
[illegible]	2199	-.5819	5647	-.5982	-.4447
[illegible]		-.2435	-.5139	5905	-.4518

ARC11-716 TA14 OL+T12+S12N25+AT10 LEFT VERTICAL (RB1V55)

ALPHA(5) = -2.870 BETA(2) = -8.050

SECTION 1 LEFT VERTICAL DEPENDENT VARIABLE CP

Z/BV	.1580	.3160	.6000	.8400	.9250
X/CV					
.000	.5481	.4048	.4224	.4408	.3877
.025	.6511	.5645	.5836	.5681	.5465
.050	.6034	.5248	.5388	.5515	.5508
.150	.4528	.4549	.4397	.4564	.3924
.300	.3524	.3655	.3714	.3518	.3325
.520	[illegible]	[illegible]	.1669	[illegible]	.0513
.685	-.3551	[illegible]	-.4513	-.4552	-.4874
.775	-.2345	[illegible]	-.4007	-.4224	-.4715
.900		[illegible]	-.3603	-.4277	-.4592

ALPHA(5) = 2.870 BETA(3) = 5.980

SECTION 1 LEFT VERTICAL DEPENDENT VARIABLE CP

Z/BV	.1580	.3160	.6000	.8400	.9250
X/CV					
.000	.5882	.4788	.5127	.5251	.4770
.025	.5645	.4847	[illegible]	.4983	.5025
.050	.5346	.4365	[illegible]	.467[illegible]	.5135
.150	[illegible]	.5687	.3755	.3400	[illegible]
.300	.2782	.3015	.3255	.3097	[illegible]
.520	.1588	.1[illegible]	.1367	.1254	[illegible]
.685	.3645	[illegible]	.4498	-.4710	[illegible]
.775	.3525	.4348	.4265	-.4418	.4887
.900		.2861	-.3961	-.4531	-.4855

ALPHA(5) = 2.060 BETA(4) = -5.920

SECTION 1 LEFT VERTICAL DEPENDENT VARIABLE CP

Z/BV	.1580	.3160	.6000	.8400	.9250
X/CV					
.000	.5356	.5310	.5624	.5878	.5427
.025	.4445	.5238	.5576	.5416	.1970
.050	.4458	.5345	.5440	.5665	.4177
.150	.3294	.2471	[illegible]	.3019	.2796
.300	[illegible]	.2138	[illegible]	.2460	.2547
.520	[illegible]	.1127	[illegible]	.1032	[illegible]
.685	-.5887	-.5[illegible]4	-.4703	-.4878	-.5142
.775	-.2590	-.4749	-.4533	-.4841	-.5066
.900		-.5390	-.4543	-.4600	-.5079

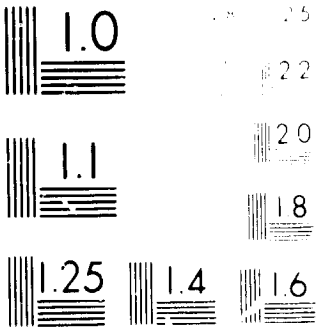
1.0
2.5
2.2
2.0
1.1
1.8
1.25
1.4
1.6

[illegible]-71E (A14 [illegible] -312-312N25-AT10 LEFT VERTICAL (RB1V33)

ALPHAO([illegible]) = -2.880 BETAO (5) = -2.000

SECTION (1)LEFT VERTICAL DEPENDENT VARIABLE CP

Z/BV	.1580	.3160	.6000	.8400	.9250
X/CV					
.000	.6641	.5790	.5932	.5934	.5915
.025	.2669	.1353	.1283	.2123	.0472
.050	.3804	.2676	.1970	.2461	.2162
.150	.2732	.1742	.1949	.2202	.2031
.300	.1339	.1265	.2153	.1837	.2364
.520	.0491	.0467	[illegible]169	.0805	-.0124
.685	-.3905	-.5252	-.4833	-.4971	-.5170
.775	-.2423	-.4891	-.4759	-.4868	-.5157
.900		-.3229	-.4725	-.5013	-.5045

ALPHAO(5) = -2.850 BETAO (6) = .020

SECTION (1)LEFT VERTICAL DEPENDENT VARIABLE CP

Z/BV	.1580	.3160	.6000	.8400	.9250
X/CV					
.000	.6780	.5964	.6024	.5869	.6117
.025	.1110	-.0328	-.1319	-.1638	-.1820
.050	.3192	.0930	-.1094	-.0763	-.1214
.150	.2250	.1059	.0862	.1173	.1217
.300	.0792	.0491	.1273	.1025	.1867
.520	-.0211	-.0193	-.0009	.0319	-.0233
.685	-.3728	-.5481	-.4983	-.5013	-.5057
.775	-.2587	-.4892	-.4970	-.4987	-.5131
.900		-.3409	-.4970	-.5127	-.4979

ALPHAO(5) = -2.850 BETAO (7) = 2.020

SECTION (1)LEFT VERTICAL DEPENDENT VARIABLE CP

Z/BV	.1580	.3160	.6000	.8400	.9250
X/CV					
.000	.6664	.5912	.5902	.5430	.5788
.025	.0028	-.2155	-.4192	-.4512	-.4921
.050	-.0077	-.1861	-.4094	-.4637	-.4734
.150	.1802	.0478	-.0046	-.0470	-.0868
.300	.0391	-.0177	.0337	.0069	.0859
.520	-.0796	-.0782	-.0612	-.0358	-.0431
.685	-.3677	-.5616	-.5196	-.4911	-.4993
.775	-.2588	-.4604	-.5207	-.4934	-.5140
.900		-.3425	-.5244	-.5059	-.5033

ARC11-716 IA14 O1+T12+S12N25+AT10 LEFT VERTICAL (RB1V33)

ALPHAO(5) = -2.770 BETAO (8) = 4.100

SECTION (1)LEFT VERTICAL DEPENDENT VARIABLE CP

X/CV \ Z/BV	.1580	.3160	.6000	.8400	.9250
.000	.6219	.5500	.5415	.4768	.5258
.025	-.0818	-.2673	-.5681	-.6031	-.6313
.050	-.1219	-.2671	-.5584	-.6029	-.6548
.150	.0670	-.1287	-.2400	-.4830	-.4784
.300	.0028	-.0618	-.0927	-.2579	-.3137
.520	-.1231	-.1295	-.1390	-.0818	-.0519
.685	-.3664	-.5846	-.5330	-.5241	-.4918
.775	-.2349	-.4412	-.5414	-.5141	-.5048
.900		-.3541	-.5356	-.5138	-.5019

ALPHAO(5) = -2.790 BETAO (9) = 6.120

SECTION (1)LEFT VERTICAL DEPENDENT VARIABLE CP

X/CV \ Z/BV	.1580	.3160	.6000	.8400	.9250
.000	.5746	.4977	.4923	.4157	.4671
.025	-.1281	-.2964	-.5013	-.6268	-.6621
.050	-.1529	-.3110	-.5132	-.6547	-.7144
.150	-.1325	-.2460	-.3703	-.5824	-.5682
.300	.0014	-.1598	-.2694	-.4455	-.4629
.520	-.1304	-.1678	-.2607	-.2465	-.2708
.685	-.3858	-.5772	-.5507	-.5858	-.5597
.775	-.2564	-.4428	-.5613	-.5808	-.5693
.900		-.3842	-.5647	-.5845	-.5704

ALPHAO(5) = -2.790 BETAO (10) = 8.140

SECTION (1)LEFT VERTICAL DEPENDENT VARIABLE CP

X/CV \ Z/BV	.1580	.3160	.6000	.8400	.9250
.000	.5304	.4274	.4108	.3146	.3755
.025	-.1980	-.3533	-.5322	-.6460	-.6892
.050	-.2239	-.3615	-.5391	-.6958	-.7361
.150	-.3503	-.3337	-.4984	-.6036	-.6416
.300	.0101	-.2902	-.4157	-.4703	-.5631
.520	-.1679	-.2780	-.4136	-.4150	-.4115
.685	-.4056	-.5732	-.6209	-.6810	-.6381
.775	-.2761	-.4629	-.6255	-.5907	-.6405
.900		-.4366	-.4968	-.4398	-.5184

[illegible] IA14A [illegible] LEFT VERTICAL (RB1V33)

ALPHAO([illegible]) = -2.770 BETAO (11) = 10.100

SECTION (1)LEFT VERTICAL DEPENDENT VARIABLE CP

Z/BV	.1580	.3160	.6000	.8400	.9250
X/CV					
.000	.4559	.3000	.2754	.1664	.2567
.025	-.2832	-.4148	-.5654	-.6121	-.6577
.050	-.3174	-.4262	-.5725	-.5480	-.6346
.150	-.5200	-.4434	-.5574	-.6132	-.6273
.300	-.0456	-.4283	-.5247	-.5445	-.4063
.520	-.2015	-.4222	-.5397	-.5110	-.4209
.685	-.4132	-.6214	-.6660	-.4950	-.5586
.775	-.2548	-.5213	-.5775	-.4476	-.4427
.900		-.4630	-.5022	-.4269	-.3884

ALPHAO(6) = -.760 BETAO (1) = -10.520

SECTION (1)LEFT VERTICAL DEPENDENT VARIABLE CP

Z/BV	.1580	.3160	.6000	.8400	.9250
X/CV					
.000	.3904	.2443	.2214	.2402	.1590
.025	.7014	.6372	.6366	.6037	.5474
.050	.6497	.5936	.5904	.5689	.5461
.150	.5103	.4969	.4855	.4754	.4119
.300	.4080	.4118	.4101	.3764	.3407
.520	.2798	.2214	.1884	.1465	.0371
.685	-.3255	-.4121	-.4202	-.4238	-.4690
.775	-.2343	-.3636	-.3715	-.4006	-.4420
.900		-.2434	-.3194	-.3842	-.4219

ALPHAO(6) = -.730 BETAO (2) = -8.420

SECTION (1)LEFT VERTICAL DEPENDENT VARIABLE CP

Z/BV	.1580	.3160	.6000	.8400	.9250
X/CV					
.000	.4571	.3339	.3415	.3504	.2782
.025	.6300	.5539	.5754	.5476	.4998
.050	.5844	.5145	.5313	.5118	.4987
.150	.4335	.4290	.4285	.4174	.3683
.300	.3588	.3582	.3576	.3326	.2979
.520	.2378	.1883	.1515	.1180	-.0073
.685	-.3442	-.4421	-.4376	-.4615	-.4879
.775	-.2442	-.4085	-.4030	-.4422	-.4743
.900		-.2755	-.3607	-.4412	-.4606

ARC11-716 IA14 O1+T12+S12N25+AT10 LEFT VERTICAL (RB1V35)

ALPHAO(6) = -.730 BETAO (3) = -6.290

SECTION (1)LEFT VERTICAL DEPENDENT VARIABLE CP

Z/BV	.1580	.3160	.6000	.8400	.9250
X/CV					
.000	.5198	.4256	.4497	.4581	.3960
.025	.5602	.4479	.4827	.4828	.4386
.050	.5266	.4216	.4529	.4512	.4478
.150	.3848	.3434	.3604	.3671	.3221
.300	.2524	.2917	.3035	.2982	.2682
.520	.1853	.1535	.1193	.1146	-.0098
.685	-.3735	-.4732	-.4565	-.4646	-.5012
.775	-.2559	-.4394	-.4336	-.4350	-.4932
.900		-.2971	-.4036	-.4431	-.4868

ALPHAO(6) = - 710 BETAO (4) = -4.140

SECTION (1)LEFT VERTICAL DEPENDENT VARIABLE CP

Z/BV	.1580	.3160	.6000	.8400	.9250
X/CV					
.000	.5605	.4803	.5078	.5158	.4897
.025	.4429	.3291	.3404	.3856	.3446
.050	.4353	.3236	.3428	.3640	.3684
.150	.3123	.2311	.2778	.3012	.2628
.300	.1602	.1954	.2423	.2471	.2252
.520	.1040	.1011	.0841	.1005	-.0093
.685	-.4012	-.4946	-.4764	-.4681	-.5145
.775	-.2456	-.4750	-.4604	-.4514	-.5115
.900		-.3069	-.4389	-.4616	-.5094

ALPHAO(6) = -.700 BETAO (5) = -2.080

SECTION (1)LEFT VERTICAL DEPENDENT VARIABLE CP

Z/BV	.1580	.3160	.6000	.8400	.9250
X/CV					
.000	.6035	.5427	.5491	.5381	.5335
.025	.2563	.1575	.1374	.2116	.1663
.050	.3542	.2356	.1931	.2391	.2254
.150	.2487	.1617	.1807	.2050	.1832
.300	.1135	.1056	.1844	.1693	.2068
.520	.0308	.0269	.0244	.0628	-.0281
.685	-.3641	-.5242	-.4942	-.4941	-.5195
.775	-.2376	-.4783	-.4878	-.4822	-.5200
.900		-.3146	-.4830	-.4993	-.5104

ARC11-716 IA14 OL+T12+S12N25+AT10 LEFT VERTICAL (RB1+33)

ALPHAO(6) = -.700 BETAO (6) = .030

SECTION (1)LEFT VERTICAL DEPENDENT VARIABLE CP

X/CV \ Z/BV	.1580	.3160	.6000	.8400	.9250
.000	.6179	.5646	.5630	.5329	.5617
.025	.0705	-.0453	-.1339	-.1537	-.1315
.050	.2788	.0751	-.1077	-.0604	-.1052
.150	.2007	.0882	.0674	.0096	.0953
.300	.0629	.0287	.0847	.0669	.1385
.520	-.0325	-.0317	-.0219	[illegible]	-.0415
.685	-.3788	-.5468	-.5050	-.5034	-.5169
.775	2631	-.4720	-.5069	-.5024	-.5225
.900		-.3268	-.5069	-.5166	-.5086

ALPHAO(6) = -.700 BETAO (7) = 2.160

SECTION (1)LEFT VERTICAL DEPENDENT VARIABLE CP

X/CV \ Z/BV	.1580	.3160	.6000	.8400	.9250
.000	.6129	.5556	.5426	.4893	.5270
.025	-.0521	-.2583	-.4355	-.4808	-.4667
.050	-.0288	-.2216	-.4299	-.4986	-.4633
.150	.1491	.0209	-.0424	-.0933	-.1709
.300	.0122	-.0528	-.0140	-.0361	.0552
.520	-.1080	-.1044	-.0891	-.0658	-.0674
.685	-.3617	-.5718	-.5299	-.5179	-.5090
.775	-.2496	-.4358	-.5341	-.5203	-.5216
.900		-.3403	-.5400	-.5335	-.5037

ALPHAO(6) = -.710 BETAO (8) = 4.270

SECTION (1)LEFT VERTICAL DEPENDENT VARIABLE CP

X/CV \ Z/BV	.1580	.3160	.6000	.8400	.9250
.000	.5872	.5056	.4987	.4424	.4847
.025	-.1052	-.2920	-.5782	-.5998	-.6410
.050	-.1486	-.2917	-.5729	-.6075	-.6291
.150	.0201	-.1632	-.2490	-.4893	-.4992
.300	-.0506	-.0876	-.1165	-.1949	-.3034
.520	-.1453	-.1552	-.1453	-.1134	-.0760
.685	-.3869	-.5857	-.5310	-.5384	-.5011
.775	-.2680	-.4255	-.5474	-.5344	-.5126
.900		-.3372	-.5488	-.5342	-.5096

ORIGINAL PAGE IS OF POOR QUALITY

ARC11-718 IA14 O1+T12+S12N25+AT10 LEFT VERTICAL (RB1V33)

ALPHAO(6) = -.730 BETAO (9) = 6.350

SECTION (1)LEFT VERTICAL DEPENDENT VARIABLE CP

Z/BV	.1580	.3160	.6000	.8400	.9250
X/CV					
.000	.5556	.4628	.4499	.3617	.4084
.025	-.1819	-.3049	-.5284	-.6437	-.6866
.050	-.1896	-.3273	-.5395	-.6762	-.7195
.150	-.1778	-.2651	-.3938	-.6045	-.5915
.300	-.0140	-.1921	-.3018	-.4655	-.4977
.520	-.1554	-.2008	-.2886	-.2843	-.2954
.685	-.4017	-.5900	-.5711	-.6092	-.5756
.775	-.2741	-.4397	-.5832	-.6040	-.5915
.900		-.3854	-.5508	-.6022	-.5854

ALPHAO(6) = -.730 BETAO (10) = 8.130

SECTION (1)LEFT VERTICAL DEPENDENT VARIABLE CP

Z/BV	.1580	.3160	.6000	.8400	.9250
X/CV					
.000	.4840	.3880	.3699	.2655	.3262
.025	-.2516	-.3665	-.5408	-.6513	-.7003
.050	-.2810	-.3760	-.5521	-.6990	-.7331
.150	-.4102	-.3526	-.5108	-.6112	-.6607
.300	-.0220	-.3271	-.4330	-.4924	-.5348
.520	-.1858	-.3198	-.4324	-.4398	-.4164
.685	-.4173	-.5886	-.6467	-.6677	-.6504
.775	-.2785	-.4740	-.6323	-.5594	-.6257
.900		-.4359	-.4778	-.4538	-.4694

ALPHAO(6) = -.750 BETAO (11) = 10.110

SECTION (1)LEFT VERTICAL DEPENDENT VARIABLE CP

Z/BV	.1580	.3160	.6000	.8400	.9250
X/CV					
.000	.4170	.2784	.2407	.1318	.2148
.025	-.3518	-.4329	-.5737	-.6105	-.6525
.050	-.3785	-.4450	-.5805	-.6444	-.6970
.150	-.5561	-.4602	-.5640	-.6232	-.6450
.300	-.0657	-.4595	-.3325	-.5566	-.5684
.520	-.2198	-.4595	-.5532	-.5131	-.4548
.685	-.4187	-.6242	-.6579	-.4835	-.4952
.775	-.2329	-.5168	-.5763	-.4587	-.4617
.900		-.4516	-.5113	-.4501	-.4455

ARC11-718 1414 20+312+312R25+A710 LEFT VERTICAL RB1V33

ALPHA(7) = 2.010 BETA(1) = 10.000

SECTION (1)LEFT VERTICAL DEPENDENT VARIABLE CP

Z/BV	.1580	.3160	.6000	.8400	.9250
X/CV					
.000	.3679	.2253	.2047	.2017	.1288
.025	.6196	.5827	.5828	.5477	.4497
.050	.5622	.5218	.5417	.5124	.4986
.150	.4212	.4299	.4360	.4275	.3668
.300	.3342	.3649	.3544	.3376	.3195
.520	.2363	.1914	.1417	.1119	.0214
.685	-.3485	-.4324	-.4335	-.4356	-.4756
.775	-.2561	-.3996	-.3883	-.4146	-.4567
.900		-.2776	-.3429	-.4025	-.4343

ALPHA(7) = 2.000 BETA(2) = -8.040

SECTION (1)LEFT VERTICAL DEPENDENT VARIABLE CP

Z/BV	.1580	.3160	.6000	.8400	.9250
X/CV					
.000	.4335	.3117	.3143	.3080	.2386
.025	.5695	.4777	.5215	.4992	.4507
.050	.5224	.4391	.4806	.4666	.4544
.150	.3714	.3609	.3811	.3791	.3257
.300	.2662	.3161	.3088	.3017	.2758
.520	.1989	.1578	.1144	.1040	-.0269
.685	-.3728	-.4629	-.4546	-.4507	-.4898
.775	-.2548	-.4316	-.4227	-.4357	-.4775
.900		-.2994	-.3840	-.4271	-.4643

ALPHA(7) = 2.050 BETA(3) = -6.040

SECTION (1)LEFT VERTICAL DEPENDENT VARIABLE CP

Z/BV	.1580	.3160	.6000	.8400	.9250
X/CV					
.000	.5015	.5809	.4038	.3933	.3363
.025	.5041	.4000	.4217	.4249	.3880
.050	.4747	.3627	.3947	.3938	.3964
.150	.3351	.2726	.3134	.3222	.2761
.300	.1917	.2488	.2619	.2495	.2277
.520	.1455	.1235	.0868	.0772	-.0369
.685	-.4072	-.4869	-.4765	-.4848	-.5094
.775	-.2558	-.4597	-.4521	-.4632	-.4978
.900		-.3188	-.4248	-.4668	-.4915

ARC11-718 IA14 O1+T12+S12N25+AT10 LEFT VERTICAL (B1V33)

ALPHAO(7) = 1.920 BETAO (4) = -3.990

SECTION (1)LEFT VERTICAL DEPENDENT VARIABLE CP

Z/BV	.1580	.3160	.6000	.8400	.9250
X/CV					
.000	.5212	.4391	.4580	.4806	.4316
.025	.3822	.2701	.2780	.5244	.2859
.050	.3832	.2714	.2801	.5087	.3110
.150	.2641	.1775	.2246	.2543	.2181
.300	.1212	.1441	.1914	.1949	.1889
.520	.0637	.0665	.0524	.0548	-.0400
.685	-.4048	-.5121	-.4920	-.4995	-.5204
.775	-.2473	-.4614	-.4797	-.4831	-.5146
.900		-.5057	-.4596	-.4959	-.5138

ALPHAO(7) = 1.920 BETAO (5) = -2.020

SECTION (1)LEFT VERTICAL DEPENDENT VARIABLE CP

Z/BV	.1580	.3160	.6000	.8400	.9250
X/CV					
.000	.6201	.4982	.5004	.4771	.4808
.025	.2015	.1099	.0732	.1511	.1064
.050	.3060	.2012	.1317	.1825	.1699
.150	.2173	.1171	.1312	.1613	.1377
.300	.0818	.0719	.1141	.1195	.1667
.520	-.0190	-.0116	-.0088	.0312	-.0592
.685	-.3124	-.5471	-.5048	-.5118	-.5366
.775	-.2335	-.4505	-.5019	-.5053	-.5382
.900		-.3118	-.4964	-.5177	-.5211

ALPHAO(7) = 1.920 BETAO (6) = .010

SECTION (1)LEFT VERTICAL DEPENDENT VARIABLE CP

Z/BV	.1580	.3160	.6000	.8400	.9250
X/CV					
.000	.5673	.5111	.5033	.4686	.4975
.025	.0139	-.0634	-.1731	-.1950	-.1788
.050	.2489	.0129	-.1501	-.1221	-.1650
.150	.1562	.0448	.0183	.0644	.0543
.300	.0217	-.0108	.0124	.0398	.0815
.520	-.0746	-.0714	-.0550	-.0174	-.0557
.685	-.3498	-.5697	-.5201	-.5209	-.5228
.775	-.2494	-.4124	-.5246	-.5141	-.5281
.900		-.5202	-.5254	-.5219	-.5162

[illegible] LEFT VERTICA [illegible]

ALPHA [illegible] = 1.920 BETA (7) = [illegible]

SECTION [illegible] LEFT VERTICAL DEPENDENT VARIABLE [illegible]

Z/BV	.1580	.3160	.6000	.8400	.9250
X/CV					
[illegible]	.6245	.5119	.4910	.4541	[illegible]
.025	-.1438	-.2625	-.4410	-.4845	[illegible]
.050	.0045	-.2428	-.4371	-.5058	[illegible]
.150	.1137	-.0118	-.0751	-.1114	-.1737
.300	-.0175	-.0659	-.0735	-.0585	[illegible]
.520	-.1589	-.1325	-.1126	-.0864	[illegible]
.685	-.3423	-.5722	-.5328	-.5252	[illegible]
.775	-.2321	-.3979	-.5438	-.5207	-.5248
.900		-.3307	-.5495	-.5322	-.5153

ALPHA(7) = 1.900 BETA(8) = 4.080

SECTION (1)LEFT VERTICAL DEPENDENT VARIABLE CP

Z/BV	.1580	.3160	.6000	.8400	.9250
X/CV					
.000	.5580	.4653	.4507	.3963	.4380
.025	-.1317	-.3139	-.5678	-.5960	-.6450
.050	-.1698	-.3168	-.5566	-.6074	-.6256
.150	-.0347	-.1844	-.2179	-.4944	-.5036
.300	-.0490	-.1116	-.1481	-.1478	-.2452
.520	-.1655	-.1697	-.1580	-.1353	-.0727
.685	-.3879	-.5741	-.5393	-.5323	-.5105
.775	-.2424	-.4053	-.5579	-.5289	-.5279
.900		-.3425	-.5398	-.5341	-.5321

ALPHA(7) = 2.040 BETA(9) = 6.080

SECTION (1)LEFT VERTICAL DEPENDENT VARIABLE CP

Z/BV	.1580	.3160	.6000	.8400	.9250
X/CV					
.000	.5163	.4250	.4096	.3119	.3596
.025	-.2351	-.3314	-.5345	-.6440	-.6899
.050	-.2632	-.3459	-.5471	-.6784	-.7070
.150	-.2053	-.2929	-.5962	-.6081	-.5959
.300	-.0368	-.2149	-.3080	-.4521	-.4923
.520	-.1688	-.2170	-.2910	-.2811	-.2305
.685	-.4047	-.5736	-.5777	-.6061	-.5594
.775	-.2352	-.4220	-.5892	-.5959	-.5768
.900		-.3897	-.5031	-.5718	-.5888

ORIGINAL PAGE IS
OF POOR QUALITY

ARC11-716 TA14 O1+T12+S12N25+AT10 LEFT VERTICAL (RB1V33)

ALPHAO(7) = 2.030 BETAO (10) = 8.110

SECTION (1)LEFT VERTICAL DEPENDENT VARIABLE CP

Z/BV	.1580	.3160	.6000	.8400	.9250
X/CV					
.000	.4412	.3439	.3168	.2029	.2616
.025	-.3174	-.4239	-.5584	-.6544	-.7128
.050	-.3358	-.4307	-.5643	-.6971	-.7479
.150	-.4234	-.4100	-.5303	-.6161	-.6714
.300	-.0544	-.3759	-.4644	-.5168	-.5972
.520	-.2291	-.3478	-.4611	-.4761	-.5910
.685	-.4146	-.5590	-.6539	-.6004	-.6235
.775	-.2320	-.4659	-.5928	-.5131	-.5308
.900		-.4181	-.4647	-.4274	-.3878

ALPHAO(7) = 2.350 BETAO (11) = 10.150

SECTION (1)LEFT VERTICAL DEPENDENT VARIABLE CP

Z/BV	.1580	.3160	.6000	.8400	.9250
X/CV					
.000	.3570	.2326	.1611	.0601	.1401
.025	-.4255	-.4976	-.6025	-.6255	-.6568
.050	-.4478	-.5125	-.6064	-.6568	-.6972
.150	-.5749	-.5238	-.5928	-.6553	-.6520
.300	-.1672	-.5133	-.5648	-.5934	-.5809
.520	-.2769	-.5065	-.5823	-.5240	-.4912
.685	-.4030	-.6174	-.6454	-.4893	-.4978
.775	-.2365	-.5094	-.5875	-.4720	-.4704
.900		-.4411	-.5380	-.4774	-.4495

ALPHAO(8) = 4.300 BETAO (1) = -9.980

SECTION (1)LEFT VERTICAL DEPENDENT VARIABLE CP

Z/BV	.1580	.3160	.6000	.8400	.9250
X/CV					
.000	.3296	.1951	.1804	.1518	.0861
.025	.5658	.5113	.5408	.5098	.3163
.050	.5133	.4667	.5010	.4784	.4665
.150	.3549	.3894	.4012	.3979	.3583
.300	.2725	.3324	.3652	.3085	.3124
.520	.2193	.1698	.1105	.1027	.0116
.685	-.3708	-.4486	-.4495	-.4228	-.4749
.775	-.2758	-.4186	-.4[illegible]	.4198	-.4542
.900		-.3053	-.3626	-.3998	-.4388

FIGURE 7(6) TA14 TM+T12+S12+N25+ATIO LEFT VERTICAL (RB1V35)

ALPHA(8) = 4.200 BETA(2) = -8.090

SECTION (1)LEFT VERTICAL DEPENDENT VARIABLE CP

Z/BV	.1580	.3160	.6000	.8400	.9250
X/CV					
.000	.4328	.2769	.2749	.2588	.1548
.025	.5332	.4418	.4854	.4633	.2879
.050	.4904	.4005	.4470	.4290	.4291
.150	.3432	.3281	.3499	.3499	.3305
.300	.2244	.2481	.2635	.2731	.2617
.520	.1674	.1454	.0907	.0795	-.0447
.685	-.4134	-.4704	-.4682	-.4570	-.5019
.775	-.2630	-.4401	-.4368	-.4545	-.4901
.900		-.3119	-.3995	-.4472	-.4755

ALPHA(8) = 4.200 BETA(3) = -5.990

SECTION (1)LEFT VERTICAL DEPENDENT VARIABLE CP

Z/BV	.1580	.3160	.6000	.8400	.9250
X/CV					
.000	.4878	.3672	.3616	.3439	.2938
.025	.4384	.3528	.3794	.3854	.2338
.050	.4178	.3271	.3551	.3542	.3768
.150	.2867	.2357	.2762	.2912	.2488
.300	.1868	.2128	.2088	.2158	.2217
.520	.1100	.1023	.0641	.0554	-.0498
.685	-.4371	-.4920	-.4880	-.4828	-.5181
.775	-.2589	-.4722	-.4652	-.4673	-.5115
.900		-.3172	-.4399	-.4696	-.5065

ALPHA(8) = 4.200 BETA(4) = -3.990

SECTION (1)LEFT VERTICAL DEPENDENT VARIABLE CP

Z/BV	.1580	.3160	.6000	.8400	.9250
X/CV					
.000	.5024	.4015	.4229	.4089	.3829
.025	.3291	.2314	.2384	.2939	.1584
.050	.3425	.2358	.2415	.2694	.2894
.150	.2278	.1451	.1899	.2215	.1874
.300	.0907	.1113	.1424	.1605	.1632
.520	.0345	.0361	.0261	.0313	-.0658
.685	-.4184	-.5218	-.5026	-.5032	-.5315
.775	-.2568	-.4975	-.4959	-.4874	-.5278
.900		-.3011	-.4748	-.4965	-.5309

ARC11-716 IA14 OL+T12+S12N25+AT10 LEFT VERTICAL (RB1V33)

ALPHAC(8) = 4.220 BETAC (5) = -2.000

SECTION (1)LEFT VERTICAL DEPENDENT VARIABLE CP

Z/BV	.1580	.3160	.6000	.8400	.9250
X/CV					
.000	.5471	.4550	.4906	.4214	.4235
.025	.2665	.0781	.0352	.1191	.0188
.050	.3035	.1704	.0885	.1485	.1550
.150	.1934	.0864	.0945	.1353	.1093
.500	.0445	.0597	.0694	.0934	.1515
.520	-.0335	-.0288	-.0332	.0056	-.0734
.685	-.3075	-.3562	-.5195	-.5146	-.5426
.775	-.2588	-.4214	-.5190	-.5043	-.5408
.900		-.3057	-.5098	-.5219	-.5560

ALPHAC(8) = 4.245 BETAC (6) = -.070

SECTION (1)LEFT VERTICAL DEPENDENT VARIABLE CP

Z/BV	.1580	.3160	.6000	.8400	.9250
X/CV					
.000	.5483	.4668	.4517	.4132	.4818
.025	-.0177	-.1121	-.2046	-.2113	-.2187
.050	.2182	-.0358	-.1911	-.1622	-.1477
.150	.1257	.0120	-.0196	.0302	.0508
.500	-.0157	-.0558	-.0334	.0100	.0763
.520	-.1085	-.0972	-.0797	-.0157	-.0774
.685	-.3496	-.5713	-.5327	-.5185	.5423
.775	-.2429	-.3898	-.5392	-.5156	-.5434
.900		-.3192	-.5379	-.5288	-.5334

ALPHAC(8) = 4.220 BETAC (7) = 1.990

SECTION (1)LEFT VERTICAL DEPENDENT VARIABLE CP

Z/BV	.1580	.3160	.6000	.8400	.9250
X/CV					
.000	.5519	.4704	.4406	.3808	.4202
.025	-.0575	-.2817	-.4552	-.4853	-.5324
.050	.1074	-.2699	-.4516	-.5093	-.5118
.150	.0820	-.0416	-.1087	-.1476	-.2077
.500	-.0426	-.0815	-.1031	-.0877	-.0552
.520	-.1682	-.1631	-.1403	-.1081	-.1007
.685	-.2782	-.5222	-.5440	-.5320	-.5226
.775	-.2208	-.3617	-.5565	-.5245	-.5317
.900		-.3480	-.5276	-.5338	-.5247

(RB1+33)

ALPHA = 4.450 BETA = [illegible]

SECTION [illegible] LEFT VERTICAL DEPENDENT VARIABLE [illegible]

Z/Cv	.1500	.3160	.6000	.8400	[illegible]
R/Cv					
.000	.5172	.4357	[illegible]	[illegible]	.4177
.025	-.1624	-.3370	-.5540	-.6094	[illegible]
.050	-.1914	-.3436	-.5645	-.6267	-.6441
.100	[illegible]	-.2028	-.2364	[illegible]	[illegible]
.300	[illegible]	-.1241	-.1841	[illegible]	.1312
.500	-.1473	-.1860	-.1875	-.1587	-.1164
.650	-.3578	-.5241	-.5452	-.5466	-.5263
.775	.2145	-.3812	-.5676	-.5463	-.5437
.900		-.3558	-.4981	-.5559	-.5496

ALPHA [illegible] = 4.410 BETA [illegible] = 6.060

SECTION [illegible] LEFT VERTICAL DEPENDENT VARIABLE CP

Z/Cv	.1500	.3160	.6000	.8400	.9250
R/Cv					
.000	[illegible]	.5919	.5721	.2617	.3143
.025	-.2617	-.5624	-.5435	-.6465	-.6881
.050	.2490	-.5778	-.5550	-.6436	-.7156
.150	-.1104	-.3268	-.4121	-.6213	-.6089
.300	-.0891	-.1995	-.3513	-.5280	-.4875
.500	-.2276	-.2542	-.3521	-.2094	-.2355
.650	-.2158	-.4753	-.5863	[illegible]	[illegible]
.775	.2241	-.4045	-.5920	-.6161	-.5921
.900		-.5901	-.4450	-.5063	-.5861

ALPHA [illegible] = 4.410 BETA [illegible] = 8.150

SECTION [illegible] LEFT VERTICAL DEPENDENT VARIABLE CP

Z/Cv	.1500	.3160	.6000	.8400	.9250
R/Cv					
.000	.4330	.3091	.2754	.1508	.2180
.025	-.3470	-.4657	-.5644	-.6354	-.6914
.050	-.3754	-.4764	-.5762	-.6726	-.7309
.150	-.1107	-.4552	-.5457	-.6323	-.6481
.300	-.1720	-.3696	-.4651	-.5255	-.5020
.500	-.2479	-.2844	-.4724	-.4914	[illegible]
.650	-.3022	-.4364	[illegible]	-.5810	-.5860
.775	-.2418	-.4288	-.5593	-.4734	-.4541
.900		-.3259	-.4815	-.4525	-.5848

ORIGINAL PAGE IS
OF POOR QUALITY

ARC11-716 IA14 O1+T12+S12N25+AT10 LEFT VERTICAL (RB1V33)

ALPHAO(8) = 4.390 BETAO (11) = 10.140

SECTION (1)LEFT VERTICAL DEPENDENT VARIABLE CP

Z/BV	.1580	.3160	.6000	.8400	.9250
X/CV					
.000	.3116	.1944	.1393	.0106	.0805
.025	-.3974	-.5204	-.6182	-.6396	-.6487
.050	-.4184	-.5314	-.6224	-.6690	-.6802
.150	-.5336	-.5290	-.6081	-.6658	-.6334
.300	-.2167	-.5123	-.5718	-.6245	-.6563
.520	-.3360	-.4981	-.5856	-.5389	-.5992
.685	-.3342	-.5458	-.6182	-.5105	-.5413
.775	-.2423	-.4572	-.5838	-.4962	-.5244
.900		-.3428	-.5483	-.4897	-.5118

ALPHAO(9) = 6.340 BETAO (1) = -9.960

SECTION (1)LEFT VERTICAL DEPENDENT VARIABLE CP

Z/BV	.1580	.3160	.6000	.8400	.9250
X/CV					
.000	.5038	.1658	.1305	.1076	.0491
.025	.5296	.4614	.5047	.4730	.2774
.050	.4661	.4179	.4649	.4474	.4385
.150	.2901	.3411	.3680	.3694	.3182
.300	.1919	.2896	.2868	.2882	.3091
.520	.1699	.1501	.0902	.0871	.0006
.685	-.4099	-.4509	-.4525	-.4244	-.4787
.775	-.2920	-.4363	-.4139	-.4229	-.4586
.900		-.3442	-.3722	-.4020	-.4458

ALPHAO(9) = 6.380 BETAO (2) = -7.970

SECTION (1)LEFT VERTICAL DEPENDENT VARIABLE CP

Z/BV	.1580	.3160	.6000	.8400	.9250
X/CV					
.000	.4415	.2599	.2443	.2221	.1640
.025	.4174	.4096	.4391	.4308	.2510
.050	.3891	.3650	.4001	.3951	.4096
.150	.2811	.2797	.3074	.3228	.2746
.300	.1640	.2277	.2344	.2458	.2597
.520	.0805	.1092	.0697	.0697	-.0475
.685	-.4846	-.4777	-.4750	-.4435	-.5066
.775	-.2946	-.4532	-.4458	-.4461	-.4925
.900		-.3673	-.4093	-.4371	-.4823

AF011-710 TA14 01+T12+S12N25+AT10 LEFT VERTICAL (R)1V33)

ALPHAO (1) = 5.980 BETAO (3) = -6.000

SECTION (1)LEFT VERTICAL DEPENDENT VARIABLE CP

Z/BV	.1580	.3160	.6000	.8400	.9250
X/CV					
.000	.4895	.3521	.3338	.3003	.2545
.025	.3984	.3225	.3565	.3620	.2120
.050	.3730	.3017	.3276	.3319	.3533
.150	.2532	.2093	.2505	.2687	.2461
.300	.1298	.1807	.1905	.1980	.2157
.520	.0741	.0836	.0525	.0591	-.0628
.685	-.4525	-.4993	-.4931	-.4757	-.5205
.775	-.2781	-.4797	-.4707	-.4687	-.5106
.900		-.3326	-.4454	-.4674	-.5056

ALPHAO(9) = 5.990 BETAO (4) = -4.010

SECTION (1)LEFT VERTICAL DEPENDENT VARIABLE CP

Z/BV	.1580	.3160	.6000	.8400	.9250
X/CV					
.000	.4896	.3815	.3813	.3659	.3470
.025	.3009	.2061	.2175	.2644	.1656
.050	.3204	.2138	.2165	.2480	.2776
.150	.2009	.1284	.1716	.2004	.1861
.300	.0631	.0944	.1287	.1443	.1750
.520	.0195	.0225	.0152	.0282	-.0756
.685	-.4333	-.5240	-.5055	-.5021	-.5359
.775	-.2713	-.5029	-.4979	-.4904	-.5325
.900		-.3056	-.4786	-.5010	-.5332

ALPHAO(9) = 6.010 BETAO (5) = -2.060

SECTION (1)LEFT VERTICAL DEPENDENT VARIABLE CP

Z/BV	.1580	.3160	.6000	.8400	.9250
X/CV					
.000	.4496	.4310	.4091	.3803	.3960
.025	.2979	.0700	.0217	.1129	.0491
.050	.2917	.1498	.0757	.1341	.1592
.150	.1736	.0651	.0659	.1178	.1208
.300	.0151	.0092	.0551	.0977	.1534
.520	-.0549	-.0363	-.0439	.0109	-.0857
.685	-.3539	-.5584	-.5250	-.5116	-.5525
.775	-.2539	-.4488	-.5257	-.5034	-.5530
.900		-.3100	-.5130	-.5173	-.5520

ARC11-716 IA14 O1+T12+S12N25+AT10 LEFT VERTICAL (RB1V33)

ALPHAO(9) = 6.020 BETAO (8) = .050

SECTION (1)LEFT VERTICAL DEPENDENT VARIABLE CP

Z/BV	.1580	.3160	.6000	.8400	.9250
X/CV					
.000	.5386	.4477	.4132	.3752	.4440
.025	-.0333	-.1316	-.2231	-.2133	-.2290
.050	.1914	-.0742	-.2202	-.1740	-.1439
.150	.1124	-.0072	-.0423	.0145	.0369
.300	-.0128	-.0546	-.0486	.0186	.0608
.520	-.1277	-.1113	-.0987	-.0260	-.0949
.685	-.3582	-.5732	-.5402	-.5187	-.5481
.775	-.2504	-.3936	-.5475	-.5177	-.5521
.900		-.3258	-.5433	-.5290	-.5429

ALPHAO(9) = 6.010 BETAO (7) = 2.060

SECTION (1)LEFT VERTICAL DEPENDENT VARIABLE CP

Z/BV	.1580	.3160	.6000	.8400	.9250
X/CV					
.000	.4990	.4532	.3943	.3573	.4114
.025	.0074	-.3051	-.4625	-.4784	-.5602
.050	.1178	-.2978	-.4640	-.5051	-.5359
.150	.0689	-.0638	-.1363	-.1506	-.1996
.300	-.0663	-.1011	-.1251	-.0838	-.0484
.520	-.1862	-.1884	-.1628	-.1102	-.1217
.685	-.3011	-.5170	-.5570	-.5450	-.5454
.775	-.2272	-.3608	-.5682	-.5383	-.5502
.900		-.3516	-.4308	-.5525	-.5478

ALPHAO(9) = 5.990 BETAO (8) = 4.060

SECTION (1)LEFT VERTICAL DEPENDENT VARIABLE CP

Z/BV	.1580	.3160	.6000	.8400	.9250
X/CV					
.000	.4952	.4157	.3791	.3176	.3854
.025	-.1465	-.3369	-.5626	-.5923	-.6592
.050	-.1784	-.3565	-.5691	-.6157	-.6474
.150	-.0376	-.1897	-.2452	-.5027	-.5244
.300	-.0865	-.1301	-.1888	-.1476	-.1630
.520	-.1989	-.2015	-.1984	-.1507	-.1319
.685	-.2992	-.4964	-.5527	-.5452	-.5356
.775	-.2210	-.3781	-.5753	-.5495	-.5524
.900		-.3690	-.4508	-.5573	-.5607

ARC11-7)6 IA14 (B1+T12-S12N25+AT10 LEFT VERTICAL (RB1V33)

ALPHAO(9) = 5.980 BETAO (9) = 6.090

SECTION (1)LEFT VERTICAL DEPENDENT VARIABLE CP

X/CV \ Z/BV	.1580	.3160	.6000	.8400	.9250
.000	.4730	.3740	.3314	.2268	.3005
.025	-.2455	-.3751	-.5450	-.6581	-.6977
.050	-.2844	-.3941	-.5635	-.6920	-.7145
.150	.0526	-.3313	-.4248	-.6281	-.6194
.300	-.1172	-.1916	-.3406	-.4024	-.5100
.520	-.2508	-.2581	-.3120	-.3161	-.2504
.685	-.2928	-.4361	-.5999	-.6191	-.5872
.775	-.2362	-.4262	-.5819	-.6193	-.6100
.900		-.3251	-.4334	-.4611	-.5134

ALPHAO(9) = 5.970 BETAO (10) = 8.160

SECTION (1)LEFT VERTICAL DEPENDENT VARIABLE CP

X/CV \ Z/BV	.1560	.3160	.6000	.8400	.9250
.000	.4569	.2969	.2489	.1256	.2089
.025	-.3269	-.4671	-.5743	-.6369	-.6830
.050	-.3277	-.4817	-.5823	-.6722	-.7225
.150	-.0785	-.4713	-.5545	-.6485	-.6455
.300	-.2058	-.3000	-.4694	-.5284	-.5079
.520	-.3329	-.2927	-.4681	-.4964	-.3751
.685	-.3053	-.3937	-.5920	-.5639	-.5624
.775	-.2512	-.3773	-.5373	-.4688	.4464
.900		-.2682	-.4910	-.4397	-.3997

ALPHAO(9) = 5.950 BETAO (11) = 10.160

SECTION (1)LEFT VERTICAL DEPENDENT VARIABLE CP

X/CV \ Z/BV	.1580	.3160	.6000	.8400	.9250
.000	.2674	.1679	.1174	-.0094	.0612
.025	-.3853	-.5220	-.6300	-.6277	-.6277
.050	-.4147	-.5335	-.6355	-.6547	-.6524
.150	-.3095	-.5322	-.6220	-.6481	-.6137
.300	-.2845	-.5142	-.5821	-.6174	-.6404
.520	-.3853	-.4560	-.5834	-.5282	-.6200
.685	-.3039	-.4270	-.6003	-.5089	-.5544
.775	-.2497	-.3558	-.5844	-.4988	-.5340
.900		-.2942	-.5599	-.5048	-.5209

DATE 08 JAN 75 TABULATED PRESSURE DATA - IA14A - VOL. 7

ARC11-716 IA14 O1+T12+S12N25+AT10 LEFT VERTICAL (RB1V33)

ALPHAO(10) = 7.910 BETAO (1) = -10.030

SECTION (1)LEFT VERTICAL DEPENDENT VARIABLE CP

Z/BV	.1580	.3160	.6000	.8400	.9250
X/CV					
.000	.2915	.1472	.1095	.0728	.0440
.025	.4691	.4402	.4783	.4515	.2938
.050	.4202	.3911	.4346	.4214	.4482
.150	.2465	.3023	.3404	.3592	.3192
.300	.1227	.2563	.2546	.2918	.3151
.520	.0887	.1217	.0757	.0907	-.0179
.685	-.4709	-.4691	-.4604	-.4375	-.4885
.775	-.3221	-.4543	-.4210	.4349	-.4674
.900		-.3960	-.3788	-.4135	-.4565

ALPHAO(10) = 7.930 BETAO (2) = -8.030

SECTION (1)LEFT VERTICAL DEPENDENT VARIABLE CP

Z/BV	.1580	.3160	.6000	.8400	.9250
X/CV					
.000	.4246	.2492	.2229	.2108	.1509
.025	.3114	.3866	.4124	.4113	.2595
.050	.3004	.3440	.3718	.3921	.4004
.150	.1824	.2520	.2817	.3222	.2714
.300	.0846	.2104	.2059	.2470	.2590
.520	.0234	.0866	.0531	.0603	-.0594
.685	-.5050	-.4894	-.4782	-.4647	-.5156
.775	-.3524	-.4758	-.4479	-.4668	-.5044
.900		-.3967	-.4081	-.4536	-.4961

ALPHAO(10) = 7.810 BETAO (3) = -5.970

SECTION (1)LEFT VERTICAL DEPENDENT VARIABLE CP

Z/BV	.1580	.3160	.6000	.8400	.9250
X/CV					
.000	.4780	.3542	.3025	.2834	.2497
.025	.3257	.2915	.3228	.3390	.2161
.050	.3213	.2725	.2968	.3175	.3556
.150	.1970	.1765	.2198	.2759	.2247
.300	.0885	.1472	.1571	.2071	.2196
.520	.0428	.0625	.0335	.0518	-.0878
.685	-.4804	-.5122	-.5026	-.4897	-.5362
.775	-.3210	-.5003	-.4811	-.4864	-.5281
.900		-.3718	-.4532	-.4833	-.5245

AFC11-T1: TA14 OL+T12+12N25+AT10 LEFT VERTICAL (RB1V33)

ALPHAC (3) = 7.830 BETAC (4) = -4.000

SECTION (1)LEFT VERTICAL DEPENDENT VARIABLE CP

X/CV \ Z/BV	.1580	.3160	.6000	.8400	.9250
.000	.4893	.3682	.3562	.3166	.3315
.025	.2600	.1876	.1839	.2360	.1318
.050	.2967	.1940	.1315	.2252	.2640
.150	.1717	.1091	.1435	.1905	.1655
.300	.0977	.0652	.1042	.1456	.1467
.520	-.0011	.0175	.0011	.0142	-.1045
.685	-.4451	-.5337	-.5184	-.5078	-.5508
.775	-.2904	-.5207	-.5062	-.4995	-.5485
.900		-.3276	-.4842	-.5067	-.5503

ALPHAC (5) = 7.830 BETAC (5) = -2.030

SECTION (1)LEFT VERTICAL DEPENDENT VARIABLE CP

X/CV \ Z/BV	.1580	.3160	.6000	.8400	.9250
.000	.4530	.4109	.3720	.3414	.3739
.025	.2503	.0354	-.0031	.0827	.0029
.050	.2613	.1301	.0526	.1041	.1227
.150	.1493	.0400	.0408	.0904	.0945
.300	-.0129	-.0095	.0159	.0770	.1056
.520	-.0809	-.0591	-.0625	-.0115	-.1123
.685	-.3740	-.5662	-.5279	-.5244	-.5610
.775	-.2705	-.4577	-.5305	-.5213	-.5623
.900		-.3204	-.5181	-.5341	-.5623

ALPHAC(10) = 7.840 BETAC (6) = .040

SECTION (1)LEFT VERTICAL DEPENDENT VARIABLE CP

X/CV \ Z/BV	.1580	.3160	.6000	.8400	.9250
.000	.5342	.4343	.3739	.3329	.3980
.025	-.0394	-.1423	-.2229	-.2158	-.2247
.050	.1723	-.0799	-.2413	-.1950	-.1774
.150	.1033	-.0210	-.0616	-.0017	.0113
.300	-.0497	-.0735	-.0750	-.0004	.0749
.520	-.1465	-.1327	-.1139	-.0488	-.1146
.685	-.3568	-.5775	-.5447	-.5299	-.5572
.775	-.2574	-.3966	-.5515	-.5328	-.5587
.900		-.3375	-.5434	-.5420	-.5517

ARC11-716 IA14 01+T12+S12N25+AT10 LEFT VERTICAL (RB1V33)

ALPHAO(10) = 7.830 BETAO (7) = 2.040

SECTION (1)LEFT VERTICAL DEPENDENT VARIABLE CP

X/CV \ Z/BV	.1580	.3160	.6000	.8400	.9250
.000	.4917	.4349	.3601	.3082	.3748
.025	-.0319	-.2991	-.4587	-.4806	-.5490
.050	.1058	-.3085	-.4625	-.4932	-.5408
.150	.3655	-.0758	-.1513	-.1640	-.2160
.300	-.0778	-.1139	-.1352	-.1095	-.0688
.520	-.1981	-.2026	-.1736	-.1128	-.1266
.685	-.3304	-.5256	-.5555	-.5321	-.5494
.775	-.2346	-.3748	-.5664	-.5252	-.5491
.900		-.3641	-.4522	-.5390	-.5483

ALPHAO(10) = 7.870 BETAO (8) = 4.060

SECTION (1)LEFT VERTICAL DEPENDENT VARIABLE CP

X/CV \ Z/BV	.1580	.3160	.6000	.8400	.9250
.000	.4890	.4034	.3544	.2629	.3355
.025	-.1121	-.3294	-.5410	-.6063	-.6771
.050	-.1372	-.3471	-.5610	-.6312	-.6779
.150	.0092	-.1635	-.2758	-.5133	-.5331
.300	-.0998	-.1257	-.2051	-.1775	-.1745
.520	.2187	-.2236	-.2161	-.1796	-.1551
.685	-.3093	-.4905	-.5696	-.5630	-.5459
.775	-.2322	-.3814	-.5863	-.5651	-.5593
.900		-.3808	-.4394	-.5744	-.5684

ALPHAO(10) = 7.970 BETAO (9) = 6.160

SECTION (1)LEFT VERTICAL DEPENDENT VARIABLE CP

X/CV \ Z/BV	.1580	.3160	.6000	.8400	.9250
.000	.4717	.3661	.3011	.1900	.2589
.025	-.1984	-.3742	-.5432	-.6448	-.6808
.050	-.2311	-.3888	-.5580	-.6855	-.7089
.150	.0310	-.3220	-.4407	-.6111	-.6254
.300	-.1361	-.1762	-.3495	-.4114	-.5105
.520	-.2740	-.2756	-.3142	-.3422	-.2614
.685	-.3210	-.4357	-.5992	-.6147	-.5977
.775	-.2516	-.4363	-.5637	-.6121	-.6228
.900		-.3092	-.4227	-.4421	-.5052

A*11-*16 IA14 C1+T12+S12N25+AT10 LEFT VERTICAL (RB1V35)

ALPHA(10) = 7.960 BETAO (10) = 8.110

SECTION (1)LEFT VERTICAL DEPENDENT VARIABLE CP

Z/BV	.1580	.3160	.6000	.8400	.9250
X/CV					
.000	.4433	.2945	.2160	.0795	.1548
.025	-.2525	-.4545	-.5737	-.6302	-.6726
.050	-.2368	-.4657	-.5822	-.6648	-.7105
.150	-.0698	-.4587	-.5633	-.6431	-.6511
.300	-.2146	-.2594	-.4776	-.5386	-.5291
.520	-.3583	-.3154	-.4717	-.5259	-.4112
.685	-.3429	-.3965	-.5883	-.5311	-.5516
.775	-.2676	-.3706	-.5330	-.4643	-.4494
.900		-.2747	-.4948	-.4436	-.4162

ALPHA(10) = 7.960 BETAO (11) = 10.230

SECTION (1)LEFT VERTICAL DEPENDENT VARIABLE CP

Z/BV	.1580	.3160	.6000	.8400	.9250
X/CV					
.000	.2871	.1402	.0870	-.0505	.0381
.025	-.3857	-.5321	-.6383	-.6349	-.6207
.050	-.4017	-.5481	-.6430	-.6616	-.6430
.150	-.2258	-.5541	-.6315	-.6538	-.6031
.300	-.3264	-.5005	-.5901	-.6401	-.6268
.520	-.4262	-.3758	-.5800	-.5549	-.6373
.685	-.3178	-.3420	-.5955	-.5311	-.5645
.775	-.2629	-.3088	-.5904	-.5267	-.5506
.900		-.2785	-.5683	-.5344	-.5472

ALPHA(11) = 9.890 BETAO (11) = -9.960

SECTION (1)LEFT VERTICAL DEPENDENT VARIABLE CP

Z/BV	.1580	.3160	.6000	.8400	.9250
X/CV					
.000	.2370	.1423	.0750	.0650	.0155
.025	.2532	.4205	.4421	.4540	.2786
.050	.2711	.3789	.4010	.4247	.4131
.150	.1548	.2782	.3096	.3474	.2931
.300	.0256	.2248	.2422	.2693	.2648
.520	-.0065	.0940	.0578	.0742	-.0365
.685	-.5116	-.4724	-.4619	-.4375	-.4962
.775	-.3711	-.4651	-.4266	-.4351	-.4756
.900		-.4451	-.3696	-.4126	-.4634

ARC11-716 IA14 O1+T12+S12N25+AT10 LEFT VERTICAL (R01V33)

ALPHAO(11) = 9.930 BETAO (2) = -7.920

SECTION (1)LEFT VERTICAL DEPENDENT VARIABLE CP

Z/BV	.1580	.3160	.6000	.8400	.9250
X/CV					
.000	.3089	.2742	.1908	.1794	.1156
.025	.1163	.3649	.3809	.4026	.2442
.050	.1493	.3318	.3439	.3664	.3651
.150	.1237	.2243	.2570	.3007	.2513
.300	.0219	.1613	.1900	.2238	.2497
.520	-.0258	.0560	.0489	.0427	-.0710
.685	-.5035	-.4993	-.4780	-.4612	-.5150
.775	-.3561	-.4921	-.4454	-.4689	-.5025
.900		-.4543	-.4110	-.4542	-.4960

ALPHAO(11) = 9.940 BETAO (3) = -6.010

SECTION (1)LEFT VERTICAL DEPENDENT VARIABLE CP

Z/BV	.1580	.3160	.6000	.8400	.9250
X/CV					
.000	.4849	.3295	.2697	.2651	.2060
.025	.2602	.2814	.2987	.3435	.2006
.050	.2710	.2548	.2717	.3169	.3211
.150	.1624	.1625	.1956	.2504	.2008
.300	.0253	.1174	.1443	.1756	.2023
.520	.0152	.0510	.0246	.0246	-.0998
.685	-.4871	-.5175	-.5005	-.4917	-.5388
.775	-.3586	-.5097	-.4751	-.4958	-.5302
.900		-.4021	-.4477	-.4891	-.5284

ALPHAO(11) = 9.080 BETAO (4) = -3.990

SECTION (1)LEFT VERTICAL DEPENDENT VARIABLE CP

Z/BV	.1580	.3160	.6000	.8400	.9250
X/CV					
.000	.4767	.3569	.3230	.3130	.2689
.025	.2100	.1724	.1722	.2574	.1227
.050	.2807	.1832	.1760	.2358	.2279
.150	.1468	.0876	.1244	.1890	.1410
.300	-.0024	.0527	.0905	.1294	.1278
.520	-.0185	.0092	-.0039	-.0013	-.1240
.685	-.4308	-.5350	-.5087	-.5009	-.5529
.775	-.2893	-.5246	-.4998	-.5071	-.5493
.900		-.3418	-.4776	-.5094	-.5511

ARC11-716 TA14 [illegible]+T12[illegible]12N25+AT10 LEFT VERTICAL (FB1V33)

ALPHA (1) = 9.900 BETA (5) = 1.980

SECTION (1)LEFT VERTICAL DEPENDENT VARIABLE CP

Z/BV	.1580	.3160	.6000	.8400	.9250
X/CV					
.000	.4874	.3898	.3441	.3357	.3094
.025	.1811	.0243	-.0166	.0962	-.0121
.050	.2355	.1097	.0381	.1121	.0941
.150	.1294	.0266	.0214	[illegible]	.0627
.300	-.0337	-.0260	-.0007	.0510	.0599
.520	-.1015	-.0762	-.0682	-.0376	-.1383
.685	.3684	-.5680	-.5232	-.5210	-.5706
.775	-.2699	-.4495	-.5235	-.5251	-.5711
.900		-.3228	-.5131	-.5356	-.5735

ALPHA (11) = 9.910 BETA (6) = .020

SECTION (1)LEFT VERTICAL DEPENDENT VARIABLE CP

Z/BV	.1580	.3160	.6000	.8400	.9250
X/CV					
.000	.5295	.4133	.3437	.3219	.3318
.025	-.0434	-.1504	-.2425	-.2017	-.2415
.050	.1511	-.0860	-.2604	-.1773	-.1843
.150	.0897	-.0447	-.0789	-.0012	-.0158
.300	-.0690	-.0878	-.0960	-.0271	.0530
.520	-.1640	-.1470	-.1072	-.0766	-.1408
.685	-.3533	-.5776	-.5396	-.5362	-.5690
.775	-.2588	-.4037	-.5450	-.5441	-.5716
.900		-.3474	-.5414	-.5511	-.5661

ALPHA (11) = 9.900 BETA (7) = 2.040

SECTION (1)LEFT VERTICAL DEPENDENT VARIABLE CP

Z/BV	.1580	.3160	.6000	.8400	.9250
X/CV					
.000	.5117	.4111	.3351	.2962	.3152
.025	-.0588	-.3032	-.4729	-.4808	-.5474
.050	.0814	-.3172	-.4791	-.4933	-.5408
.150	.0578	-.0896	-.1744	-.1455	-.2383
.300	-.0971	-.1265	-.1718	-.1220	-.0917
.520	-.2137	-.2181	-.1731	-.1384	-.1521
.685	-.3484	-.5188	-.5600	-.5449	-.5563
.775	-.2459	-.3772	-.5675	-.5477	-.5485
.900		-.3756	-.4008	-.5428	-.5511

ARC11-716 IA14 OL+T12+S12N2S+AT10 LEFT VERTICAL (RB1V33)

ALPHAO(11) = 9.900 BETAO (8) = 4.130

SECTION (1)LEFT VERTICAL DEPENDENT VARIABLE CP

Z/BV	.1580	.3160	.6000	.8400	.9250
X/CV					
.000	.4671	.3922	.3162	.2646	.2833
.025	-.0927	-.3312	-.5213	-.6098	-.6712
.050	-.0916	-.3522	-.5465	-.6413	-.6763
.150	.0304	-.1583	-.3020	-.4974	-.5498
.300	-.1096	-.1372	-.2110	-.2106	-.1968
.520	-.2335	.2365	-.2038	-.2062	-.1829
.685	-.3295	-.4834	-.5772	-.5776	-.5628
.775	-.2393	-.3895	-.5839	-.5817	-.5766
.900		-.3773	-.4087	-.5969	-.5805

ALPHAO(11) = 9.880 BETAO (9) = 6.100

SECTION (1)LEFT VERTICAL DEPENDENT VARIABLE CP

Z/BV	.1580	.3160	.6000	.8400	.9250
X/CV					
.000	.4556	.3651	.2682	.1833	.2076
.025	-.1687	-.3775	-.5618	-.6615	-.7043
.050	-.1905	-.3977	-.5765	-.7022	-.7357
.150	.0241	-.3145	-.4618	-.6229	-.6570
.300	-.1500	-.1702	-.3708	-.4243	-.5253
.520	-.2905	-.2895	-.3036	-.3684	-.2819
.685	-.3499	-.4480	-.5991	-.6332	-.6110
.775	-.2548	-.4494	-.5349	-.6303	-.6362
.900		-.3274	-.4020	-.4555	-.4923

ALPHAO(11) = 9.870 BETAO (10) = 8.110

SECTION (1)LEFT VERTICAL DEPENDENT VARIABLE CP

Z/BV	.1580	.3160	.6000	.8400	.9250
X/CV					
.000	.3793	.3091	.1842	.0848	.1182
.025	-.0959	-.4695	-.5939	-.6250	-.6721
.050	-.0137	-.4824	-.6006	-.6581	-.7097
.150	-.0867	-.4635	-.5812	-.6373	-.6584
.300	-.2447	-.1876	-.4986	-.5354	-.5437
.520	-.3729	-.3393	-.4697	-.5315	-.4418
.685	-.3729	-.4162	-.5601	-.5239	-.5309
.775	-.2758	-.3785	-.5078	-.4704	-.4707
.900		-.2940	-.4744	-.4568	-.4485

A[illegible]S11-716 TA14 [illegible]+1:2 S12H25+AT10 LEFT VERTICAL (RB1V35)

ALPHA(11) = 10.000 BETA(11) = 10.190

SECTION 11 LEFT VERTICAL DEPENDENT VARIABLE CP

CP	.1580	.3160	.6000	.8400	.9250
X/CV					
.000	.2529	.1576	.0566	-.0554	.0149
.025	-.2619	-.5263	-.6416	-.6256	-.6113
.050	-.2105	-.5380	-.6468	.6460	-.6290
.150	-.2028	-.5652	-.6354	-.6328	-.5987
.300	.3546	-.3414	-.6005	-.6302	-.6318
.525	-.4702	-.3826	-.5789	-.5612	-.6419
.675	-.5607	-.3047	-.5923	-.5372	-.5595
.775	-.2886	-.2771	-.6078	-.5336	-.5433
.900		-.2841	-.5905	-.5428	-.5407

ARC11-716 IA14 O1+T12+S12N25+AT11 LEFT VERTICAL (RB1V34) (15 FEB 74)

REFERENCE DATA

SREF = 2.4210 SQ.FT. XMRP = 29.5800 INCHES
LREF = 38.7090 INCHES YMRP = .0000 INCHES
BREF = 38.7090 INCHES ZMRP = .0000 INCHES
SCALE = .0500 SCALE

PARAMETRIC DATA

MACH = .600 ELEVON = .000
RUDDER = .000 SPOBRK = .000

ALPHAO(1) = -8.010 BETAO (1) = -7.980

SECTION (1)LEFT VERTICAL DEPENDENT VARIABLE CP

Z/BV	.1580	.3160	.6000	.8400	.9250
X/CV					
.000	-.0879	-.3119	-.2589	-.0171	-.0297
.025	.4855	.4715	.5048	.4622	.4232
.050	.4350	.4126	.4326	.4186	.3621
.150	.2970	.2729	.2704	.2389	.1842
.500	.1556	.1321	.1141	.0775	.0468
.525	-.1124	-.1728	-.1792	-.2642	-.1827
.675	-.2570	-.2785	-.3255	-.3595	-.3124
.775	-.1999	-.1874	-.1852	-.2236	-.2052
.900		-.1477	-.1238	-.1678	-.1902

ALPHAO(1) = -7.990 BETAO (2) = -3.980

SECTION (1)LEFT VERTICAL DEPENDENT VARIABLE CP

Z/BV	.1580	.3160	.6000	.8400	.9250
X/CV					
.000	.3067	.2221	.2995	.3947	.3186
.025	.2809	.2694	.2794	.2700	.2317
.050	.2729	.2546	.2511	.2438	.2149
.150	.1575	.1353	.1220	.1122	.0911
.500	.0471	.0194	-.0036	-.0055	-.0132
.525	-.1803	-.2233	-.2694	-.2992	-.2255
.675	-.2487	-.3258	-.3646	-.3645	-.3142
.775	-.1797	-.2125	-.1976	-.1843	-.1560
.900		-.1411	-.0966	-.0652	-.0712

AF(11-716 TA14 OR+T12+S12N25+A(11 LEFT VERTICAL (FB1V34)

ALPHAC (1) = -7.990 BETAC (3) = .050

SECTION (1)LEFT VERTICAL DEPENDENT VARIABLE CP

Z/BV	.1580	.3160	.6000	.8400	.9250
X/CV					
.000	.4650	.4756	.5434	.5339	.5458
.025	-.1865	-.2971	-.3518	-.2067	-.4135
.050	.0506	-.0236	-.0787	-.0726	-.0643
.150	.0055	-.0466	-.0853	-.0673	-.0948
.500	-.0768	-.1063	-.1571	-.1325	-.1313
.520	-.2495	-.2806	-.3743	-.3668	-.2962
.645	-.2576	-.3801	-.4054	-.4412	-.3516
.775	-.1972	-.2553	-.2515	-.1994	-.1606
.900		-.1442	-.0993	-.0501	-.0382

ALPHAC (1) = -8.000 BETAC (4) = 4.090

SECTION (1)LEFT VERTICAL DEPENDENT VARIABLE CP

Z/BV	.1580	.3160	.6000	.8400	.9250
X/CV					
.000	.5056	.5123	.2638	.1755	.2783
.025	-.5260	-.6288	-.6726	-.7474	-.8609
.050	-.5799	-.4890	-.5911	-.6453	-.8276
.150	-.2062	-.3792	-.4720	-.5007	-.6511
.500	-.2059	-.2873	-.3625	-.3695	-.3160
.520	-.5179	-.5405	-.4597	-.4561	-.3249
.645	-.2701	-.4460	-.4300	-.4765	-.3516
.775	-.2325	-.2835	-.2516	-.2514	-.1984
.900		-.1658	-.1115	-.0848	-.0408

ALPHAC (1) = -8.020 BETAC (5) = 8.150

SECTION (1)LEFT VERTICAL DEPENDENT VARIABLE CP

Z/BV	.1580	.3160	.6000	.8400	.9250
X/CV					
.000	-.0852	-.3480	-.2906	-.2256	.0372
.025	-.8957	-.9120	-1.0470	-.6872	-.5627
.050	-.9495	-.8596	-1.0240	-.6828	-.5668
.150	-1.0220	-.7995	-.9428	-.6428	-.5640
.500	-.2972	-.6054	-.8811	-.5765	-.5536
.520	-.5807	-.4425	-.6390	-.4802	-.4302
.645	-.2828	-.4535	-.4980	-.3825	-.3297
.775	-.2529	-.3514	-.3771	-.3454	-.2795
.900		-.2262	-.2526	-.2738	-.2465

ARC11-716 IA14 OI+T12+S12N25+AT11 LEFT VERTICAL (RB1V34)

ALPHAO(2) = -4.050 BETAO (1) = -8.030

SECTION (1)LEFT VERTICAL DEPENDENT VARIABLE CP

X/CV \ Z/BV	.1580	.3160	.6000	.8400	.9250
.000	-.1363	-.3794	-.3608	-.1084	-.1021
.025	.4482	.4314	.4661	.4310	.3887
.050	.3981	.3786	.4042	.3865	.3350
.150	.2632	.2469	.2507	.2248	.1580
.300	.1315	.1128	.0997	.0772	.0252
.520	-.1201	-.1747	-.1731	-.2458	-.1799
.685	-.2567	-.2704	-.3168	-.3175	-.3058
.775	-.1829	-.1857	-.1788	-.2027	-.2102
.900		-.1500	-.1170	-.1498	-.1832

ALPHAO(2) = -4.050 BETAO (2) = -4.000

SECTION (1)LEFT VERTICAL DEPENDENT VARIABLE CP

X/CV \ Z/BV	.1580	.3160	.6000	.8400	.9250
.000	.2694	.1736	.2258	.3261	.2528
.025	.2365	.2335	.2508	.2378	.2056
.050	.2259	.2046	.2127	.2166	.1824
.150	.1225	.1052	.0978	.0920	.0538
.300	.0132	-.0013	-.0255	-.0248	-.0391
.520	-.1890	-.2314	-.2706	-.3024	-.2266
.685	-.2438	-.3279	-.3634	-.3658	-.3074
.775	-.1816	-.2145	-.2047	-.1863	-.1573
.900		-.1446	-.1024	-.0781	-.0800

ALPHAO(2) = -4.050 BETAO (3) = .040

SECTION (1)LEFT VERTICAL DEPENDENT VARIABLE CP

X/CV \ Z/BV	.1580	.3160	.6000	.8400	.9250
.000	.4410	.4301	.4854	.4659	.4823
.025	-.2417	-.3353	-.3466	-.2287	-.4468
.050	.0063	-.0559	-.0924	-.1119	-.1158
.150	-.0366	-.0690	-.0957	-.1146	-.1116
.300	-.1092	-.1280	-.1637	-.1500	-.1443
.520	-.2554	-.2864	-.3679	-.3811	-.2898
.685	-.2474	-.3900	-.3848	-.4233	-.3408
.775	-.1926	-.2295	-.2241	-.2011	-.1503
.900		-.1512	-.0999	-.0587	-.0258

ARC11-716 IA14 O1+T12+S12N25+AT11 LEFT VERTICAL (RB1V34)

ALPHAO(2) = -4.060 BETAO (4) = 4.070

SECTION (1)LEFT VERTICAL DEPENDENT VARIABLE CP

Z/BV	.1580	.3160	.6000	.8400	.9250
X/CV					
.000	.2600	.1511	.1882	.1017	.1855
.025	-.5865	-.6330	-.6439	-.7056	-.8964
.050	-.6409	-.5280	-.5815	-.6174	-.8666
.150	-.2413	-.4319	-.4814	-.5244	-.6565
.300	-.2454	-.3076	-.3857	-.3787	-.3073
.520	-.3300	-.3442	-.4652	-.4214	-.3157
.685	-.2743	-.4405	-.4260	-.4783	-.3307
.775	-.2371	-.2962	-.2511	-.2435	-.1880
.900		-.1850	-.1169	-.0995	-.0763

ALPHAO(2) = -4.060 BETAO (5) = 8.090

SECTION (1)LEFT VERTICAL DEPENDENT VARIABLE CP

Z/BV	.1580	.3160	.6000	.8400	.9250
X/CV					
.000	-.1301	-.4109	-.3791	-.3214	-.0381
.025	-.9635	-.9323	-1.0420	-.6939	-.5647
.050	-1.0100	-.8951	-1.0390	-.6823	-.5526
.150	-1.0530	-.8355	-.9965	-.6425	-.5469
.300	-.2906	-.7071	-.9208	-.5816	-.5265
.520	-.3766	-.4428	-.3620	-.4549	-.4184
.685	-.2793	-.4542	-.4997	-.3932	-.3284
.775	-.2534	-.3186	-.3729	-.3516	-.2906
.900		-.2313	-.2359	-.2925	-.2357

ALPHAO(3) = -.310 BETAO (1) = -8.030

SECTION (1)LEFT VERTICAL DEPENDENT VARIABLE CP

Z/BV	.1580	.3160	.6000	.8400	.9250
X/CV					
.000	-.1902	-.4246	-.4275	-.2197	-.2250
.025	.4146	.4052	.4275	.3994	.3608
.050	.3712	.3539	.3722	.3656	.3083
.150	.2438	.2233	.2313	.2152	.1375
.300	.1140	.1011	.0914	.0747	.0133
.520	-.1261	-.1692	-.1604	-.2283	-.1746
.685	-.2457	-.2611	-.3001	-.2868	-.2883
.775	-.1763	-.1813	-.1634	-.1828	-.1985
.900		-.1411	-.1090	-.1279	-.1684

ARC11-7:6 IA14 O1+T12+S12N25+AT11 LEFT VERTICAL (RB1V34)

ALPHAO(3) = -.320 BETAO (2) = -4.010

SECTION (1)LEFT VERTICAL DEPENDENT VARIABLE CP

Z/BV	.1580	.3160	.6000	.8400	.9250
X/CV					
.000	.2279	.1272	.1808	.2601	.1940
.025	.2099	.2050	.2302	.2241	.1851
.050	.1926	.1792	.1918	.1992	.1590
.150	.0961	.0813	.0812	.0770	.0377
.300	-.0004	-.0149	-.0325	-.0317	-.0497
.520	-.1935	-.2270	-.2572	-.2786	-.2174
.685	-.2338	-.3242	-.3492	-.3378	-.2904
.775	-.1754	-.2119	-.1961	-.1770	-.1591
.900		-.1450	-.0952	-.0657	-.0709

ALPHAO(3) = -.320 BETAO (3) = .030

SECTION (1)LEFT VERTICAL DEPENDENT VARIABLE CP

Z/BV	.1580	.3160	.6000	.8400	.9250
X/CV					
.000	.4044	3851	.4402	.4140	.4247
.025	-.2784	-.3504	-.3441	-.2233	-.4268
.050	-.0257	-.0794	-.0988	-.1211	-.1288
.150	-.0644	-.0856	-.1072	-.1187	-.1175
.300	-.1253	-.1338	-.1662	-.1546	-.1441
.520	-.2541	-.2776	-.3599	-.3608	-.2750
.685	-.2351	-.3888	-.3671	-.3916	-.3217
.775	-.1869	-.2229	-.2102	-.1916	-.1450
.900		-.1471	-.0914	-.0559	-.0284

ALPHAO(3) = -.320 BETAO (4) = 4.080

SECTION (1)LEFT VERTICAL DEPENDENT VARIABLE CP

Z/BV	.1580	.3160	.6000	.8400	.9250
X/CV					
.000	.2123	.0895	.1168	.0043	.0925
.025	-.6257	-.6279	-.6361	-.6381	-.9169
.050	-.6786	-.5478	-.5694	-.5794	-.8707
.150	-.2801	-.4829	-.4940	-.5285	-.6573
.300	-.2656	-.3070	-.4293	-.3897	-.2968
.520	-.3182	-.3295	-.4594	-.3965	-.2923
.685	-.2646	-.4292	-.4109	-.4178	-.3004
.775	-.2260	-.2708	-.2462	-.2269	-.1721
.900		-.1729	-.1172	-.0892	-.0743

ABC11-T16 IA14 C1+T12+S12R25+AT11 LEFT VERTICAL (RB1V34)

ALPHAO(5) = -.320 BETAO (5) = 8.110

SECTION (1)LEFT VERTICAL DEPENDENT VARIABLE CP

Z/BV	.1580	.3160	.6000	.8400	.9250
X/CV					
.000	-.1888	-.5050	-.4802	-.4074	-.1063
.025	-1.0060	-.3598	-1.0390	-.6855	-.5345
.050	-1.0470	-.9371	-1.0390	-.6703	-.5266
.150	-1.1240	-.8979	-1.0200	-.6278	-.5288
.300	-.3157	-.7753	-.9465	-.5647	-.4931
.520	-.3766	-.4264	-.6909	-.4625	-.4128
.685	-.2815	-.4500	-.4967	-.3927	-.3372
.775	-.2449	-.3021	-.3617	-.3619	-.3041
.900		-.2181	-.2202	-.3080	-.2428

ALPHAO(4) = 4.000 BETAO (1) = -8.050

SECTION (1)LEFT VERTICAL DEPENDENT VARIABLE CP

Z/BV	.1580	.3160	.6000	.8400	.9250
X/CV					
.000	-.2444	-.5174	-.5365	-.3453	-.3196
.025	.3967	.3683	.3304	.3590	.3177
.050	.3501	.3284	.3455	.3313	.2766
.150	.2214	.2091	.2163	.1969	.1180
.300	.1042	.0924	.0918	.0732	-.0076
.520	-.1238	-.1567	-.1475	-.2118	-.1679
.685	-.2396	-.2429	-.2794	-.2682	-.2732
.775	-.1692	-.1689	-.1580	-.1739	-.1963
.900		-.1401	-.1034	-.1184	-.1586

ALPHAO(4) = 4.000 BETAO (2) = -3.980

SECTION (1)LEFT VERTICAL DEPENDENT VARIABLE CP

Z/BV	.1580	.3160	.6000	.8400	.9250
X/CV					
.000	.1835	.0694	.1138	.1701	.1099
.025	.1858	.1878	.2195	.2058	.1799
.050	.1678	.1596	.1749	.1841	.1430
.150	.0757	.0700	.0758	.0668	.0277
.300	-.0141	-.0163	-.0296	-.0310	-.0554
.520	-.1811	-.2084	-.2440	-.2635	-.2000
.685	-.2232	-.3008	-.3275	-.3012	-.2715
.775	-.1570	-.1959	-.1757	-.1612	-.1467
.900		-.1350	-.0865	-.0565	-.0724

ARC11-716 IA14 O1+T12+S12N25+AT11 LEFT VERTICAL (RB1 V34)

ALPHAO(4) = 4.000 BETAO (3) = .030

SECTION (1)LEFT VERTICAL DEPENDENT VARIABLE CP

Z/BV	.1580	.3160	.6000	.8400	.9250
X/CV					
.000	.3722	.3370	.3829	.3519	.3624
.025	-.3166	-.3404	-.3365	-.2408	-.3858
.050	-.0566	-.0880	-.1108	-.1194	-.1422
.150	-.0858	-.1002	-.1177	-.1209	-.1181
.300	-.1454	-.1402	-.1735	-.1574	-.1511
.520	-.2464	-.2740	-.3384	-.3473	-.2609
.685	-.2176	-.3837	-.3498	-.3660	-.2939
.775	-.1854	-.2271	-.2011	-.1880	-.1400
.900		-.1482	-.0875	-.0550	-.0284

ALPHAO(4) = 3.990 BETAO (4) = 4.080

SECTION (1)LEFT VERTICAL DEPENDENT VARIABLE CP

Z/BV	.1580	.3160	.6000	.8400	.9250
X/CV					
.000	.1810	.0532	.0559	-.0519	.0267
.025	-.6242	-.6130	-.6246	-.5855	-.8897
.050	-.6660	-.5475	-.5675	-.5392	-.7645
.150	-.3070	-.4922	-.5243	-.5047	-.6578
.300	-.2673	-.2858	-.4318	-.4112	-.2663
.520	-.2900	-.3042	-.4128	-.3752	-.2615
.685	-.2281	-.3890	-.3636	-.3646	-.2699
.775	-.1956	-.2429	-.2238	-.2041	-.1568
.900		-.1614	-.1074	-.0731	-.0670

ALPHAO(4) = 3.980 BETAO (5) = 8.140

SECTION (1)LEFT VERTICAL DEPENDENT VARIABLE CP

Z/BV	.1580	.3160	.6000	.8400	.9250
X/CV					
.000	-.2560	-.5634	-.5656	-.5316	-.2023
.025	-1.0400	-.9239	-.9980	-.7331	-.5280
.050	-1.0660	-.9198	-.9941	-.7140	-.5344
.150	-1.1680	-.8866	-.9929	-.6690	-.5026
.300	-.3270	-.8029	-.9780	-.6072	-.4502
.520	-.3521	-.3775	-.6797	-.4701	-.3576
.685	-.2514	-.4073	-.4274	-.4000	-.3274
.775	-.2215	-.2653	-.2798	-.3630	-.2933
.900		-.2121	-.1537	-.3109	-.2425

AP011-716 TA14 01+T12+S12N25+A711 LEFT VERTICAL (RB1V34)

ALPHA (5) = 7.890 BETAO (1) = -8.010

SECTION 1)LEFT VERTICAL DEPENDENT VARIABLE CP

X/CV \ Z/BV	.1580	.3160	.6000	.8400	.9250
.000	-.2747	-.5714	-.5990	-.4333	-.3145
.025	.3728	.3469	.3517	.3258	.2350
.050	.3206	.3073	.3157	.2995	.2432
.150	.2093	.1998	.1983	.1816	.1019
.300	.1014	.0902	.0786	.0618	-.0201
.520	-.1143	-.1465	-.1368	-.2046	-.1554
.685	-.2373	-.2495	-.2713	-.2635	-.2537
.775	-.1607	-.1756	-.1524	-.1663	-.1811
.900		-.1551	-.1062	-.1133	-.1440

ALPHAO(5) = 7.900 BETAO (2) = -4.010

SECTION (1)LEFT VERTICAL DEPENDENT VARIABLE CP

X/CV \ Z/BV	.1580	.3160	.6000	.8400	.9250
.000	.1716	.0290	.0577	.0958	.0505
.025	.1490	.1744	.2089	.1903	.1651
.050	.1455	.1467	.1654	.1666	.1329
.150	.0611	.0604	.0661	.0643	.0175
.300	-.0191	-.0176	-.0296	-.0333	-.0615
.520	-.1727	-.1970	-.2304	-.2473	-.1967
.685	-.2150	-.3068	-.3128	-.2763	-.2580
.775	-.1340	-.1976	-.1728	-.1509	-.1339
.900		-.1430	-.0908	-.0524	-.0588

ALPHAO(5) = 7.910 BETAO (3) = .040

SECTION (1)LEFT VERTICAL DEPENDENT VARIABLE CP

X/CV \ Z/BV	.1580	.3160	.6000	.8400	.9250
.000	.3522	.3066	.3348	.2949	.3094
.025	-.3347	-.3491	-.3336	-.2501	-.3787
.050	-.0739	-.1063	-.1068	-.1185	-.1392
.150	-.1016	-.1119	-.1171	-.1203	-.1203
.300	-.1527	-.1433	-.1613	-.1552	-.1473
.520	-.2502	-.2643	-.3258	-.3278	-.2397
.685	-.2055	-.3682	-.3319	-.3364	-.2668
.775	-.1694	-.2168	-.1926	-.1683	-.1173
.900		-.1355	-.0892	-.0453	-.0303

ARC11-716 IA14 O1+T12+S12N25+AT11 LEFT VERTICAL (PB1V34)

ALPHAO(5) = 7.900 BETAO (4) = 4.100

SECTION (1)LEFT VERTICAL DEPENDENT VARIABLE CP

Z/BV	.1580	.3160	.6000	.8400	.9250
X/CV					
.000	.1462	.0106	-.0054	-.1201	-.0581
.025	-.6594	-.6215	-.6374	-.5784	-.8347
.050	-.6826	-.5597	-.5947	-.5409	-.6806
.150	-.3070	-.4965	-.5555	-.5239	-.6693
.300	-.2618	-.2660	-.4085	-.4512	-.2350
.520	-.2708	-.2675	-.3808	-.3463	-.2404
.685	-.1724	-.3245	-.3332	-.3338	-.2422
.775	-.1649	-.2034	-.2048	-.1889	-.1501
.900		-.1941	-.1030	-.0626	-.0593

ALPHAO(5) = 7.880 BETAO (5) = 8.170

SECTION (1)LEFT VERTICAL DEPENDENT VARIABLE CP

Z/BV	.1580	.3150	.6000	.8400	.9250
X/CV					
.000	-.2523	-.5914	-.5994	-.5990	-.3022
.025	-.9693	-.8810	-.8909	-.7056	-.5401
.050	-1.0590	-.8939	-.8969	-.7050	-.5316
.150	-1.0150	-.9309	-.9429	-.6950	-.5069
.300	-.3374	-.7859	-.9435	-.6389	-.4646
.520	-.2951	-.2854	-.6089	-.4938	-.3755
.685	-.2089	-.3190	-.3427	-.4256	-.3036
.775	-.2006	-.2346	-.2426	-.3601	-.2836
.900		-.2399	-.1377	-.2826	-.2398

ARC11-716 TA14 OL+T12+S12N25+AT11 LEFT VERTICAL (RB1V35) (15 FEB 74)

REFERENCE DATA

SREF = 2.4210 SQ.FT. XMRP = 29.5800 INCHES
CREF = 38.7090 INCHES YMRP = .0000 INCHES
BREF = 38.7090 INCHES ZMRP = .0000 INCHES
SCALE = .0300 SCALE

PARAMETRIC DATA

MACH = .750 ELEVON = .000
RUDDER = .000 SPOBRK = .000

ALPHAO (1) = -8.050 BETAO (1) = -8.000

SECTION (1)LEFT VERTICAL DEPENDENT VARIABLE CP

Z/BV	.1580	.3160	.6000	.8400	.9250
X/CV					
.000	.0644	-.1577	-.0743	.1712	.1118
.025	.4976	.4809	.5001	.4439	.3895
.050	.4525	.4247	.4295	.3982	.3337
.150	.3140	.2858	.2729	.2270	.1486
.300	.1790	.1444	.1188	.0664	.0191
.520	-.0921	-.1646	-.1949	-.2977	-.2381
.685	-.2811	-.3238	-.4407	-.5764	-.4197
.775	-.2031	-.2481	-.2490	-.3112	-.2676
.900		-.1752	-.1895	-.2249	-.2306

ALPHAO (1) = -8.040 BETAO (2) = -3.990

SECTION (1)LEFT VERTICAL DEPENDENT VARIABLE CP

Z/BV	.1580	.3160	.6000	.8400	.9250
X/CV					
.000	.3515	.2786	.3502	.4261	.3526
.025	.2911	.2667	.2748	.2597	.1993
.050	.2728	.2440	.2483	.2366	.1918
.150	.1688	.1456	.1230	.0997	.0530
.300	.0588	.0316	-.0041	-.0237	-.0301
.520	-.1788	-.2325	-.2706	-.3456	-.2643
.685	-.2797	-.3944	-.4740	-.6529	-.3989
.775	-.2118	-.2440	-.2371	-.2922	-.1692
.900		-.1866	-.1232	-.0772	-.0829

ARC11-716 IA14 O4+T12+S12N25+AT11 LEFT VERTICAL (RB1V35)

ALPHAO(1) = -8.040 BETAO (3) = .040

SECTION (1)LEFT VERTICAL DEPENDENT VARIABLE CP

Z/BV	.1580	.3160	.6000	.8400	.9250
X/CV					
.000	.4851	.4852	.5498	.5322	.5430
.025	-.1773	-.3012	-.3542	-.3056	-.4756
.050	.0633	-.0174	-.0609	-.1076	-.1492
.150	.0041	-.0417	-.0892	-.1326	-.1215
.300	-.0763	-.1095	-.1628	-.1697	-.1533
.520	-.2519	-.3120	-.3794	-.4356	-.3398
.685	-.2893	-.4838	-.5694	-.6749	-.4704
.775	-.2326	-.2843	-.2853	-.3569	-.1934
.900		-.1890	-.1172	-.1002	-.0448

ALPHAO(1) = -8.050 BETAO (4) = 4.080

SECTION (1)LEFT VERTICAL DEPENDENT VARIABLE CP

Z/BV	.1580	.3160	.6000	.8400	.9250
X/CV					
.000	.3465	.2725	.5112	.2323	.3205
.025	-.5101	-.7428	-.7750	-.8498	-.7989
.050	-.5650	-.5895	-.7392	-.8314	-.7920
.150	-.2126	-.5057	-.6169	-.6715	-.6956
.300	-.2375	-.2971	-.4417	-.4726	-.5097
.520	-.3605	-.3701	-.5131	-.4661	-.3834
.685	-.3097	-.5336	-.4738	-.4910	-.3723
.775	-.2697	-.3327	-.2807	-.2449	-.2190
.900		-.2106	-.1385	-.0913	-.0965

ALPHAO(1) = -8.060 BETAO (5) = 8.150

SECTION (1)LEFT VERTICAL DEPENDENT VARIABLE CP

Z/BV	.1580	.3160	.6000	.8400	.9250
X/CV					
.000	.0640	-.1766	-.0945	-.0614	.1264
.025	-.8817	-1.1830	-1.0100	-.5879	-.5214
.050	-.9099	-1.1810	-1.0030	-.5884	-.5245
.150	-1.0400	-1.0050	-.9877	-.5813	-.5422
.300	-.3398	-.7811	-.9117	-.5562	-.5546
.520	-.4048	-.4470	-.7585	-.5059	-.4265
.685	-.3146	-.4897	-.6281	-.4318	-.3140
.775	-.2823	-.3266	-.5571	-.3818	-.2973
.900		-.2207	-.4518	-.3219	-.2714

AT 11:716 TA14 C1+T12+S12+S25+AT11 LEFT VERTICAL FB1 V35)

ALPHA(2) = -4.070 BETA(1) = -8.040

SECTION (1)LEFT VERTICAL DEPENDENT VARIABLE CP

Z/BV	.1580	.3160	.6000	.8400	.9250
X/CV					
.000	.0196	-.2025	-.1623	.0683	.0187
.025	.4573	.4345	.4518	.4056	.5448
.050	.4002	.3816	.3924	.3669	.3063
.150	.2735	.2499	.2441	.2042	.1212
.300	.1520	.1158	.0959	.0504	-.0040
.520	-.1145	-.1757	-.1975	-.3013	-.2456
.685	-.2800	-.3234	-.4031	-.5021	-.5990
.775	-.2381	-.2146	-.2383	-.2973	-.2760
.900		-.1823	-.1786	-.2283	-.2255

ALPHA(2) = -4.080 BETA(2) = -4.000

SECTION (1)LEFT VERTICAL DEPENDENT VARIABLE CP

Z/BV	.1580	.3160	.6000	.8400	.9250
X/CV					
.000	.3073	.2156	.2792	.3391	.2815
.025	.2360	.2234	.2439	.2286	.1660
.050	.2226	.1999	.2122	.2122	.1628
.150	.1242	.1033	.1017	.0711	.0265
.300	.0244	.0004	-.0201	-.0359	-.0622
.520	-.1944	-.2476	-.2809	-.3482	-.2639
.685	-.2796	-.3945	-.4575	-.5506	-.3588
.775	-.2122	-.2489	-.2394	-.2259	-.1772
.900		-.1844	-.1205	-.0730	-.0818

ALPHA(2) = -4.080 BETA(3) = .040

SECTION (1)LEFT VERTICAL DEPENDENT VARIABLE CP

Z/BV	.1580	.3160	.6000	.8400	.9250
X/CV					
.000	.4411	.4516	.4837	.4609	.4728
.025	-.2428	-.3420	-.3639	-.2998	-.4708
.050	.0041	-.0583	-.0849	-.1203	-.1708
.150	-.0454	-.0781	-.1089	-.1442	-.1510
.300	-.1154	-.1264	-.1723	-.1774	-.1728
.520	-.2655	-.3072	-.3820	-.4312	-.3248
.685	-.2716	-.4605	-.5069	-.6571	-.4026
.775	-.2143	-.2610	-.2731	-.3146	-.1749
.900		-.1882	-.1152	-.0723	-.0418

ORIGINAL PAGE IS
OF POOR QUALITY

ARC11-716 IA14 O1+T12+S12N25+AT11 LEFT VERTICAL (FB1V35)

ALPHAO(2) = -4.080 BETAO (4) = 4.090

SECTION (1)LEFT VERTICAL DEPENDENT VARIABLE CP

Z/BV	.1580	.3160	.6000	.8400	.9250
X/CV					
.000	.2918	.2065	.2319	.1427	.2286
.025	-.5751	-.7563	-.7800	-.8375	-.8092
.050	-.6275	-.6330	-.7525	-.7799	-.7968
.150	-.2674	-.5398	-.6540	-.6828	-.7297
.300	-.2758	-.3011	-.4880	-.5133	-.5462
.520	-.3441	-.3575	-.5195	-.4647	-.3698
.685	-.2982	-.5049	-.4757	-.4573	-.3466
.775	-.2662	-.3194	-.2904	-.2435	-.2127
.900		-.2029	-.1470	-.0933	-.0989

ALPHAO(2) = -4.090 BETAO (5) = 8.150

SECTION (1)LEFT VERTICAL DEPENDENT VARIABLE CP

Z/BV	.1580	.3160	.6000	.8400	.9250
X/CV					
.000	.0204	-.2483	-.1999	-.1444	.0379
.025	-.9120	-1.1950	-1.0100	-.5842	-.5107
.050	-.9651	-1.2160	-.9988	-.5842	-.5123
.150	-1.0890	-1.0660	-.9841	-.5680	-.5322
.300	-.3975	-.8192	-.9589	-.5375	-.5324
.520	-.4030	-.4272	-.7900	-.4835	-.4339
.685	-.3034	-.4727	-.6669	-.4107	-.3186
.775	-.2641	-.3047	-.5888	-.3700	-.2918
.900		-.2179	-.4567	-.3171	-.2662

ALPHAO(3) = -.310 BETAO (1) = -8.080

SECTION (1)LEFT VERTICAL DEPENDENT VARIABLE CP

Z/BV	.1580	.3160	.6000	.8400	.9250
X/CV					
.000	-.0264	-.3170	-.2881	-.0592	-.0764
.025	.4515	.4098	.4254	.3857	.3267
.050	.3774	.3614	.3685	.3440	.2799
.150	.2519	.2348	.2250	.1919	.1146
.300	.1373	.1124	.0879	.0468	-.0232
.520	-.1147	-.1738	-.1820	-.2879	-.2397
.685	-.2678	-.3111	-.3639	-.4668	-.3887
.775	-.2050	-.2062	-.2240	-.2950	-.2730
.900		-.1741	-.1538	-.2568	-.2283

A5C11 716 TA14 28+72++512N25+AT11 LEFT VERTICAL (B1V35)

ALPHA 5) = -.320 BETAC 2) = 4.310

SECTION 1) LEFT VERTICAL DEPENDENT VARIABLE CP

Z/BV	.1580	.3160	.6000	.8400	.9250
X/CV					
.000	.2524	.1455	.1345	.2455	.2425
.025	.2120	.2120	.2410	.2245	.1914
.050	.2022	.1953	.2013	.1980	.1522
.150	.1300	.0950	.0897	.0715	[illegible]
.500	.0091	-.0053	-.0265	-.0487	-.0713
.525	-.1905	-.2550	-.2725	-.3253	-.3565
.675	-.2604	-.3724	-.4077	-.4588	-.5364
.775	.1979	-.2379	-.2231	-.2107	-.1798
.900		-.1775	-.1165	-.0785	-.0827

ALPHA 3) = -.350 BETAC 3) = .050

SECTION 1) LEFT VERTICAL DEPENDENT VARIABLE CP

Z/BV	.1580	.3160	.6000	.8400	.9250
X/CV					
.000	.4069	.5879	.4371	.4085	.4167
.025	-.2647	-.5340	-.5396	-.2859	-.4346
.050	-.0512	-.0758	-.1946	-.1589	-.1709
.150	-.0705	-.0973	-.1183	-.1463	-.1417
.500	-.1562	-.1435	-.1751	-.1851	-.1766
.525	-.2577	-.3000	-.3821	-.4214	-.3231
.675	-.2477	-.4569	-.4796	-.6044	-.5739
.775	-.2115	.2666	-.2669	-.2560	-.1578
.900		-.1874	-.1166	-.0485	-.0318

ALPHA 3) = -.320 BETAC 4) = 4.040

SECTION 1) LEFT VERTICAL DEPENDENT VARIABLE CP

Z/BV	.1580	.3160	.6000	.8400	.9250
X/CV					
.000	.2516	.1623	.1725	.0789	.1559
.025	-.6089	-.7847	-.7611	-.7785	-.8105
.050	-.8585	-.8751	-.7258	-.7255	-.7918
.150	-.5021	-.5521	-.6538	-.6502	-.7422
.500	-.2955	-.2984	-.4763	-.5555	-.5085
.525	-.3440	-.3517	-.4839	-.4402	-.3235
.675	-.2892	-.4946	-.4568	-.4150	-.3055
.775	-.2586	-.3161	-.2795	-.2318	-.1795
.900		-.2142	-.1361	-.0951	-.0848

ARC11-716 IA14 OL+T12+S12N25+AT11 LEFT VERTICAL (RB1V35)

ALPHAO(3) = -.320 BETAO (5) = 8.130

SECTION (1)LEFT VERTICAL DEPENDENT VARIABLE CP

X/CV \ Z/BV	.1580	.3160	.6000	.8400	.9250
.000	-.0166	-.3126	-.2797	-.2268	-.0363
.025	-.9072	-1.2060	-.9889	-.5849	-.4982
.050	-.9643	-1.2440	-.9870	-.5852	-.5010
.150	-1.1340	-1.1020	-.9631	-.5646	-.5102
.300	-.4217	-.8613	-.9204	-.5277	-.5160
.520	-.3918	-.5932	-.7943	-.4773	-.4252
.685	-.2919	-.4408	-.6737	-.4146	-.3100
.775	-.2445	-.2892	-.5860	-.5691	-.2746
.900		-.2155	-.4572	-.3143	-.2505

ALPHAO(4) = 4.020 BETAO (1) = -8.060

SECTION (1)LEFT VERTICAL DEPENDENT VARIABLE CP

X/CV \ Z/BV	.1580	.3160	.6000	.8400	.9250
.000	-.0751	-.3747	-.3760	-.1607	-.1781
.025	.3937	.3752	.3429	.3488	.2953
.050	.3456	.3288	[illegible]	.3163	.2525
.150	.2273	.2125	.2174	.1776	.0943
.300	.1218	.0964	.0752	.0400	-.0332
.520	-.1084	-.1726	-.1736	-.2678	-.2299
.685	-.2592	.2986	-.3440	-.3959	-.3613
.775	-.1961	-.1990	-.2002	-.2649	-.2539
.900		-.1720	-.1456	-.2215	-.2135

ALPHAO(4) = 4.020 BETAO (2) = -4.050

SECTION (1)LEFT VERTICAL DEPENDENT VARIABLE CP

X/CV \ Z/BV	.1580	.3160	.6000	.8400	.9250
.000	.2243	.1152	.1387	.1845	.1213
.025	.1667	.1769	.2123	.1954	.1534
.050	.1591	.1556	.1727	.1676	.1308
.150	.0733	.0766	.0677	.0549	.0037
.300	-.0110	-.0086	-.0387	-.0511	-.0849
.520	-.1795	-.2213	-.2656	-.3058	-.2447
.685	-.2468	-.3639	-.3858	-.4048	-.3147
.775	-.1747	-.2202	-.2049	-.1990	-.1628
.900		-.1642	-.1032	-.0722	-.0742

ARC11-716 (A14 JA+T12+.12N25+AT11 LEFT VERTICAL (RB1V35)

ALPHA(3) = 4.020 BETA(3) = .040

SECTION (1)LEFT VERTICAL DEPENDENT VARIABLE CP

Z/R	.1580	.3160	.6000	.8400	.9250
X/C					
.000	.3569	.3408	.3804	.3424	.3542
.025	-.2613	.3651	-.3648	-.2993	-.4248
.050	-.0598	-.1058	-.1085	.1513	-.1957
.150	-.0991	-.1092	-.1280	.1515	-.1493
.300	-.1526	-.1495	-.1851	-.1435	-.1815
.500	-.2731	-.2921	-.3759	-.4145	.2983
.695	-.2146	-.4239	-.4281	-.4955	-.5223
.775	-.1981	-.2528	-.2415	-.2467	-.1418
.900		-.1764	-.1123	-.0559	-.0175

ALPHA(4) = 4.010 BETA(4) = 5.100

SECTION (1)LEFT VERTICAL DEPENDENT VARIABLE CP

Z/R	.1580	.3160	.6000	.8400	.9250
X/C					
.000	.1571	-.0115	-.0253	.1325	-.0269
.025	-.6459	-.8470	.8158	-.7784	-.8272
.050	-.7247	-.7935	-.7820	-.7596	-.8033
.150	-.5158	-.7540	-.7461	-.7081	-.7557
.300	-.3269	-.5909	-.6839	-.6659	-.7011
.500	-.3193	-.5254	-.5044	-.4481	-.5004
.695	-.2485	-.4371	-.4118	-.3495	-.2619
.775	-.2145	-.2756	-.2600	-.2202	-.1760
.900		-.1942	-.1394	-.1148	-.0937

ALPHA(4) = 4.000 BETA(5) = 8.160

SECTION (1)LEFT VERTICAL DEPENDENT VARIABLE CP

Z/R	.1580	.3160	.6000	.8400	.9250
X/C					
.000	-.0728	-.3001	-.3706	-.3288	-.1229
.025	-.9076	-1.1930	-.9801	-.5753	-.4838
.050	-.9466	-1.2260	-.9598	-.5756	-.4870
.150	-1.1960	-1.1270	-.9537	-.5480	-.4848
.300	-.4250	-.8714	-.8042	-.5038	-.4708
.500	-.3607	-.3557	-.6065	-.4664	-.4206
.695	-.2685	-.3944	-.6797	-.4146	-.3085
.775	-.2263	-.2327	-.5809	-.3664	-.2675
.900		-.2123	-.4258	-.3219	-.2341

ARC11-716 IA14 O1+T12+S12N25+AT11 LEFT VERTICAL (RB1V35)

ALPHAO(5) = 7.930 BETAO (1) = -8.040

SECTION (1)LEFT VERTICAL DEPENDENT VARIABLE CP

Z/BV	.1580	.3160	.6000	.8400	.9250
X/CV					
.000	-.0980	-.4386	-.4261	-.2537	-.2335
.025	.3505	.3515	.3471	.3151	.2673
.050	.3142	.3097	.3080	.2905	.2242
.150	.2078	.2025	.1845	.1705	.0799
.300	.1109	.0910	.0682	.0362	-.0498
.520	-.1011	-.1494	-.1641	-.2513	-.2151
.685	-.2572	-.2975	-.3322	-.3550	-.3232
.775	-.1925	-.2054	-.2067	-.2442	-.2355
.900		-.1770	-.1470	-.1981	-.2056

ALPHAO(5) = 7.940 BETAO (2) = -4.000

SECTION (1)LEFT VERTICAL DEPENDENT VARIABLE CP

Z/BV	.1580	.3160	.6000	.8400	.9250
X/CV					
.000	.2150	.0739	.0909	.1011	.0452
.025	.1301	.1665	.2038	.1770	.1407
.050	.1325	.1472	.1621	.1471	.1056
.150	.0504	.0678	.0629	.0362	-.0051
.300	-.0183	-.0200	-.0365	-.0606	-.0914
.520	-.1719	-.2104	-.2481	-.3050	-.2364
.685	-.2379	-.3463	-.3422	-.3742	-.2958
.775	-.1574	-.2165	-.1962	-.1943	-.1525
.900		-.1672	-.1114	-.0724	-.0583

ALPHAO(5) = 7.940 BETAO (3) = .030

SECTION (1)LEFT VERTICAL DEPENDENT VARIABLE CP

Z/BV	.1580	.3160	.6000	.8400	.9250
X/CV					
.000	.3446	.3069	.3354	.2921	.3136
.025	-.2878	-.3522	-.3265	-.3094	-.3838
.050	-.0708	-.1031	-.1068	-.1216	-.1586
.150	-.1041	-.1165	-.1273	-.1414	-.1430
.300	-.1584	-.1421	-.1784	-.1686	-.1770
.520	-.2475	-.2692	-.3558	-.3611	-.2721
.685	-.2145	-.3976	-.3953	-.4276	-.2918
.775	-.1860	-.2415	-.2231	-.1806	-.1279
.900		-.1640	-.1023	-.0313	-.0201

ARC11-716 IA14 C4+T12+S12N25+AT11 LEFT VERTICAL (RB1V35)

ALPHAO (4) = 7.930 BETAO (4) = 4.110

SECTION (1)LEFT VERTICAL DEPENDENT VARIABLE CP

X/CV \ Z/BV	.1580	.3160	.6000	.8400	.9250
.000	.2004	.0623	.0377	-.0635	.0031
.025	-.6189	-.7403	-.7328	-.6470	-.7935
.050	-.5981	-.6960	-.7198	-.6160	-.7519
.150	-.3205	-.5016	-.6506	-.6186	-.7187
.300	-.3012	-.2648	-.4646	-.5381	-.3838
.520	-.2930	-.2941	-.4035	-.3682	-.2433
.685	-.2160	-.3718	-.3674	-.3263	-.2324
.775	-.1811	-.2245	-.2266	-.1861	-.1491
.900		-.1955	-.1200	-.0760	-.0454

ALPHAO (5) = 7.920 BETAO (5) = 8.180

SECTION (1)LEFT VERTICAL DEPENDENT VARIABLE CP

X/CV \ Z/BV	.1580	.3160	.6000	.8400	.9250
.000	-.1065	-.4274	-.4294	-.4200	-.1840
.025	-.9630	-1.1340	-.8964	-.5845	-.4472
.050	-1.0280	-1.1570	-.9022	-.5684	-.4454
.150	-1.0230	-1.1040	-.8754	-.5345	-.4418
.300	-.4289	-.8512	-.8725	-.4807	-.4183
.520	-.3067	-.2197	-.8020	-.4231	-.3770
.685	-.2227	-.2899	-.6767	-.3932	-.3357
.775	-.2156	-.2268	-.5578	-.3576	-.2955
.900		-.2292	-.3486	-.3435	-.2306

ARC11-716 IA14 O1+T12+S12N25+AT11 LEFT VERTICAL (RB1V36) (15 FEB 74)

REFERENCE DATA

SREF = 2.4210 SQ.FT. XMRP = 29.5800 INCHES
LREF = 38.7090 INCHES YMRP = .0000 INCHES
BREF = 38.7090 INCHES ZMRP = .0000 INCHES
SCALE = .0300 SCALE

PARAMETRIC DATA

MACH = .850 ELEVON = .000
RUDDER = .000 SPOBRK = .000

ALPHAO(1) = -8.120 BETAO (1) = -8.000

SECTION (1)LEFT VERTICAL DEPENDENT VARIABLE CP

Z/BV	.1580	.3160	.6000	.8400	.9250
X/CV					
.000	.2067	.0218	.0502	.2136	.1451
.025	.5132	.4880	.4969	.4380	.3909
.050	.4697	.4280	.4255	.3928	.3328
.150	.3318	.3045	.2790	.2268	.1502
.300	.2087	.1728	.1244	.0702	-.0182
.520	-.0542	-.1425	-.1458	-.2871	-.2564
.685	-.2829	-.4310	-.6834	-1.0260	-.9027
.775	-.2213	-.2355	-.3316	-.6211	-.4782
.900		-.2038	-.2601	-.3701	-.2889

ALPHAO(1) = -8.110 BETAO (2) = -3.970

SECTION (1)LEFT VERTICAL DEPENDENT VARIABLE CP

Z/BV	.1580	.3160	.6000	.8400	.9250
X/CV					
.000	.4184	.3218	.3889	.4412	.3670
.025	.2949	.2646	.2837	.2495	.1885
.050	.2898	.2491	.2502	.2371	.1711
.150	.1826	.1594	.1407	.0955	.0349
.300	.0762	.0488	.0108	-.0267	-.0923
.520	-.1448	-.2044	-.2193	-.3337	-.2815
.685	-.3226	-.5758	-.8961	-.8139	-.6894
.775	-.2436	-.2884	-.4046	-.5113	-.3043
.900		-.2359	-.1800	-.2186	-.1136

ARC11-716 IA14 01+T12+S12N25+AT11 LEFT VERTICAL (RB1V36)

ALPHAO(1) = -8.070 BETAO (3) = .010

SECTION (1)LEFT VERTICAL DEPENDENT VARIABLE CP

Z/BV	.1580	.3160	.6000	.8400	.9250
X/CV					
.000	.5193	.4923	.3627	.5355	.5400
.025	-.1485	-.2812	-.3341	-.3264	-.4452
.050	.0811	-.0058	-.0515	-.0851	-.2896
.150	.0137	-.0316	-.0754	-.1103	-.1399
.300	-.0674	-.0909	-.1460	-.1500	-.1938
.520	-.2471	-.2912	-.3095	-.3830	-.3466
.685	-.3300	-.6474	-.8680	-.5592	-.6205
.775	-.2556	-.3699	-.4903	-.4371	-.2729
.900		-.2667	-.2188	-.2633	-.1219

ALPHAO(1) = -8.080 BETAO (4) = 4.090

SECTION (1)LEFT VERTICAL DEPENDENT VARIABLE CP

Z/BV	.1580	.3160	.6000	.8400	.9250
X/CV					
.000	.4158	.3248	.3512	.2783	.3421
.025	-.4545	-.7800	-.8191	-.9640	-.9674
.050	-.5228	-.6800	-.8269	-.9535	-.9511
.150	-.2132	-.4857	-.6457	-.7490	-.8187
.300	-.2677	-.2944	-.4496	-.4982	-.6290
.520	-.3592	-.3888	-.4930	-.4844	-.4068
.685	-.3869	-.6173	-.5759	-.4337	-.3807
.775	-.3029	-.4484	-.3543	-.2305	-.2378
.900		-.2800	-.2106	-.1220	-.1591

ALPHAO(1) = -8.100 BETAO (5) = 8.160

SECTION (1)LEFT VERTICAL DEPENDENT VARIABLE CP

Z/BV	.1580	.3160	.6000	.8400	.9250
X/CV					
.000	.2084	.0107	.0205	-.0138	.1433
.025	-.6889	-1.0520	-1.0530	-.6178	-.5261
.050	-.7321	-1.0550	-1.0630	-.6019	-.5256
.150	-.8479	-.9746	-.9948	-.5906	-.5379
.300	-.3983	-.6180	-.9563	-.5750	-.5464
.520	-.5579	-.4970	-.8390	-.5224	-.4871
.685	-.3535	-.5003	-.6811	-.4560	-.4039
.775	-.2771	-.3381	-.5914	-.4313	-.3880
.900		-.2622	-.5124	-.3926	-.3557

ARC11-716 1A14 O1+T12+S12N25+AT11 LEFT VERTICAL (RB1V36)

ALPHAO(2) = -3.980 BETAO (1) = -8.050

SECTION (1)LEFT VERTICAL DEPENDENT VARIABLE CP

Z/BV	.1580	.3160	.6000	.8400	.9250
X/CV					
.000	.1713	-.0350	-.0410	.1148	.0566
.025	.4574	.4320	.4396	.3966	.3769
.050	.4121	.3785	.3830	.3618	.2970
.150	.2845	.2577	.2398	.2027	.1137
.300	.1693	.1344	.0853	.0534	-.0386
.520	-.0831	-.1549	-.1660	-.2974	-.2728
.685	-.3149	-.4265	-.6176	-.8746	-.7681
.775	-.2338	-.2530	-.3193	-.5284	-.4181
.900		-.2251	-.2498	-.3631	-.2780

ALPHAO(2) = -3.980 BETAO (2) = -3.990

SECTION (1)LEFT VERTICAL DEPENDENT VARIABLE CP

Z/BV	.1580	.3160	.6000	.8400	.9250
X/CV					
.000	.3588	.2879	.3139	.3694	.2929
.025	.2314	.2083	.2440	.2275	.1844
.050	.2215	.1992	.2118	.2081	.1521
.150	.1257	.1150	.1012	.0788	.0056
.300	.0349	.0148	-.0251	-.0338	-.0071
.520	-.1626	-.2178	-.2401	-.3208	-.2910
.685	-.3042	-.5336	-.7957	-.7465	-.5479
.775	-.2331	-.2983	-.3656	-.3595	-.2738
.900		-.2388	-.1644	-.1398	-.0862

ALPHAO(2) = -3.990 BETAO (3) = .060

SECTION (1)LEFT VERTICAL DEPENDENT VARIABLE CP

Z/BV	.1580	.3160	.6000	.8400	.9250
X/CV					
.000	.4257	.4317	.4903	.4588	.4686
.025	-.1897	-.3417	-.3703	-.3615	-.4554
.050	.0228	-.0800	-.0939	-.1332	-.3291
.150	-.0515	-.0806	-.0999	-.1497	-.1628
.300	-.1192	-.1304	-.1756	-.1830	-.2020
.520	-.2684	-.3025	-.3313	-.4074	-.3510
.685	-.3107	-.5697	-.7930	-.6156	-.5289
.775	-.2501	-.3383	-.4433	-.4069	-.2279
.900		-.2462	-.1613	-.1892	-.1027

-R011-710 IA14 01+T12+S12N25+AT11 LEFT VERTICAL (PB1V36)

ALPHAO (2) = -3.990 BETAO (4) = 4.070

SECTION (1)LEFT VERTICAL DEPENDENT VARIABLE CP

X/CV \ Z/BV	.1580	.3160	.6000	.8400	.9250
.000	.3528	.2589	.2691	.1897	.2570
.025	-.5093	-.8469	-.8084	-.9019	-.8387
.050	-.5700	-.7758	-.8061	-.8909	-.8367
.150	-.2802	-.5227	-.6741	-.7612	-.7818
.300	-.3145	-.3102	-.4826	-.5632	-.7152
.520	-.3617	-.3782	-.5288	-.4707	-.4272
.685	-.3279	-.5827	-.3513	-.3396	-.3248
.775	-.2843	-.3960	-.3505	-.1908	-.2229
.900		-.2551	-.1986	-.1026	-.1340

ALPHAO(2) = -4.000 BETAO (5) = 8.110

SECTION (1)LEFT VERTICAL DEPENDENT VARIABLE CP

X/CV \ Z/BV	.1580	.3160	.6000	.8400	.9250
.000	.1620	-.0384	-.0735	-.0856	.0596
.025	-.7088	-1.0760	-1.0670	-.5986	-.5344
.050	-.7592	-1.0830	-1.0710	-.6043	-.5203
.150	-.8951	-1.0300	-.9929	-.5922	-.5316
.300	-.4614	-.8808	-.9649	-.5615	-.5269
.520	-.5596	-.4870	-.8870	-.5134	-.4766
.685	-.3277	-.4701	-.6851	-.4494	-.4152
.775	-.2554	-.3115	-.5969	-.4269	-.3913
.900		-.2557	-.5146	-.3990	-.3525

ALPHAO(3) = -.310 BETAO (1) = -8.050

SECTION (1)LEFT VERTICAL DEPENDENT VARIABLE CP

X/CV \ Z/BV	.1580	.3160	.6000	.8400	.9250
.000	.1302	-.0964	-.1365	.0145	-.0331
.025	.4157	.3998	.4047	.3676	.3537
.050	.3743	.3454	.3508	.3317	.2652
.150	.2522	.2335	.2172	.1852	.0964
.300	.1473	.1154	.0741	.0399	-.0570
.520	-.0895	-.1637	-.1785	-.3010	-.2664
.685	-.2957	-.3767	-.5494	-.7181	-.6520
.775	-.2229	-.2527	-.2952	-.4772	-.3584
.900		-.2203	-.2239	-.3232	-.2713

ARC11-716 IA14 O1+T12+S12N25+AT11 LEFT VERTICAL (RB1V36)

ALPHAO(3) = -.321 BETAO (2) = -3.990

SECTION (1)LEFT VERTICAL DEPENDENT VARIABLE CP

Z/BV	.1580	.3160	.6000	.8400	.9250
X/CV					
.000	.3010	.2029	.2498	.2852	.2151
.025	.1397	.1853	.2257	.2012	.1741
.050	.1397	.1701	.1899	.1774	.1258
.150	.0953	.0936	.0812	.0606	-.0064
.300	.0088	.0002	-.0402	-.0557	-.1164
.520	-.1701	-.2201	-.2533	-.3451	-.2817
.685	-.2877	-.4664	-.6657	-.6532	-.4605
.775	-.2183	-.2725	-.2967	-.2943	-.2162
.900		-.2152	-.1539	-.1115	-.0810

ALPHAO(3) = -.330 BETAO (3) = .040

SECTION (1)LEFT VERTICAL DEPENDENT VARIABLE CP

Z/BV	.1580	.3160	.6000	.8400	.9250
X/CV					
.000	.3511	.3758	.4385	.4019	.4112
.025	-.2426	-.3559	-.3820	-.3414	-.4506
.050	-.0310	-.0894	-.1106	-.1598	-.2853
.150	-.0950	-.0963	-.1179	-.1614	-.1672
.300	-.1452	-.1499	-.1882	-.1880	-.2120
.520	-.2706	-.3059	-.3484	-.4126	-.3443
.685	-.2773	-.5198	-.7320	-.6059	-.4566
.775	-.2349	-.3193	-.4057	-.3393	-.1887
.900		-.2363	-.1753	-.1360	-.0723

ALPHAO(3) = -.330 BETAO (4) = 8.130

SECTION (1)LEFT VERTICAL DEPENDENT VARIABLE CP

Z/BV	.1580	.3160	.6000	.8400	.9250
X/CV					
.000	.1246	-.0970	-.1594	-.1854	-.0294
.025	-.7144	-1.1060	-1.0510	-.5921	-.5156
.050	-.7657	-1.1180	-1.0660	-.5916	-.5176
.150	.9470	-1.0640	-.9917	-.5759	-.5308
.300	-.5073	-.9217	-.9645	-.5463	-.5223
.520	-.5146	-.4434	-.8938	-.4995	-.4690
.685	-.5273	-.4249	-.6962	-.4456	-.4045
.775	-.2490	-.3029	-.5814	-.4181	-.3822
.900		-.2541	-.4848	-.3871	-.3463

AR011-715 (A14 01+T12+S12N25+AT11 LEFT VERTICAL (RB1V36)

ALPHAS (1) = 3.810 BETAS (1) = -4.010

SECTION (1)LEFT VERTICAL DEPENDENT VARIABLE CP

Z/B	.1580	.3160	.6000	.8400	.9250
X/CV					
.000	.2676	.1375	.1763	.1963	.1529
.025	.1524	.1707	.2155	.1953	.1721
.050	.1473	.1489	.1786	.1614	.1219
.150	.0893	.0729	.0724	.0462	-.0256
.300	-.0041	-.0078	-.0422	-.0579	-.1209
.520	-.0691	-.2107	-.2495	-.3320	-.2804
.685	-.2780	-.4221	-.5874	-.5118	-.4029
.775	-.1984	-.2644	-.2693	-.2495	-.1993
.900		-.2090	-.1486	-.0782	-.0402

ALPHAS (4) = 3.810 BETAS (2) = .040

SECTION (1)LEFT VERTICAL DEPENDENT VARIABLE CP

Z/B	.1580	.3160	.6000	.8400	.9250
X/CV					
.000	.3408	.3433	.3863	.3428	.3521
.025	-.2909	-.3736	-.3656	-.3319	-.4245
.050	-.0721	-.1215	-.1103	-.1573	-.2484
.150	-.1119	-.1267	-.1269	-.1571	-.1851
.300	-.1656	-.1580	-.1864	-.1870	-.2045
.520	-.2591	-.2841	-.3476	-.4138	-.3158
.685	-.2468	-.4930	-.6697	-.5694	-.3979
.775	-.2136	-.3010	-.3546	-.2905	-.1602
.900		-.2271	-.1562	-.0957	-.0499

ALPHAS (4) = 3.810 BETAS (3) = 4.090

SECTION (1)LEFT VERTICAL DEPENDENT VARIABLE CP

Z/BV	.1580	.3160	.6000	.8400	.9250
X/CV					
.000	.2455	.1391	.1304	.0218	.0859
.025	-.5888	-.8260	-.7520	-.8258	-.8805
.050	-.6277	-.8242	-.7586	-.7811	-.8475
.150	-.5526	-.5781	-.6480	-.7391	-.8324
.300	-.5478	-.2780	-.5434	-.6771	-.7119
.520	-.3202	-.3367	-.5135	-.4601	-.2941
.685	-.2564	-.4682	-.4793	-.3363	-.2368
.775	-.2284	-.3022	-.3193	-.1999	-.1411
.900		-.2376	-.1808	-.0890	-.0535

ARC11-716 IA14 OL+T12+S12N25+AT11 LEFT VERTICAL (RB1V36)

ALPHAO(4) = 3.780 BETAO (4) = 8.180

SECTION (1)LEFT VERTICAL DEPENDENT VARIABLE CP

X/CV \ Z/BV	.1580	.3160	.6000	.8400	.9250
.000	.0640	-.1757	-.2665	-.2862	-.1179
.025	-.7708	-1.1400	-.9956	-.5905	-.5024
.050	-.8216	-1.1590	-.9948	-.5907	-.5055
.150	-1.0240	-1.1160	-.9652	-.5667	-.5002
.300	-.5430	-.9326	-.9816	-.5259	-.4937
.520	-.3516	-.3983	-.9668	-.4864	-.4412
.685	-.2655	-.3619	-.7877	-.4587	-.3652
.775	-.2424	-.2703	-.5761	-.4168	-.3344
.900		-.2552	-.3916	-.3862	-.3091

ALPHAO(5) = 7.940 BETAO (1) = .030

SECTION (1)LEFT VERTICAL DEPENDENT VARIABLE CP

X/CV \ Z/BV	.1580	.3160	.6000	.8400	.9250
.000	.3158	.2973	.3404	.2845	.2918
.025	-.2858	-.3727	-.3544	-.3398	-.4273
.050	-.1048	-.1378	-.1202	-.1686	-.2515
.150	-.1323	-.1375	-.1322	-.1773	-.1956
.300	-.1719	-.1581	-.1890	-.2002	-.2003
.520	-.2580	-.2808	-.3466	-.4162	-.2963
.685	-.2351	-.4377	-.5819	-.5269	-.3541
.7	-.2002	-.2743	-.2995	-.2417	-.14
.900		-.2136	-.1443	-.0589	-.0230

ALPHAO(5) = 7.930 BETAO (2) = 4.130

SECTION (1)LEFT VERTICAL DEPENDENT VARIABLE CP

X/CV \ Z/BV	.1580	.3160	.6000	.8400	.9250
.000	.1977	.0979	.0577	-.0520	.0005
.025	-.5407	-.8276	-.7420	-.7319	-.8716
.050	-.4222	-.8222	-.7474	-.7099	-.8365
.150	-.3200	-.4847	-.6553	-.6897	-.7881
.300	-.3308	-.2722	-.5290	-.6554	-.5411
.520	-.3107	-.3084	-.4598	-.4087	-.2447
.685	-.2370	-.3994	-.4447	-.3050	-.2079
.775	-.1969	-.2570	-.2719	-.1881	-.1216
.900		-.2241	-.1526	-.0801	-.0373

A*C11*P16 TA14 (0*T12+012N25+A*11 LEFT VERTICAL (FB1V36)

PHA... = 7.915 BETAO (.3) = 8.190

SE... 11 LEFT VERTICAL DEPENDENT VARIABLE CP

Z/BW	.1580	.3160	.6000	.8400	.925
Y/BW					
.001	.0116	.2557	-.3540	-.3867	-.1435
.25	-.8556	-.1850	-.8879	-.6434	-.4728
.350	-.9120	-1.1950	-.8921	-.6399	-.4667
.150	-.6138	-1.1640	-.9071	-.6012	-.4534
.350	-.6660	-.6979	-.9304	-.5436	-.4383
.520	-.2786	-.2221	-.9491	-.4666	-.4178
.685	-.2291	-.2547	-.7924	-.4284	-.3797
.775	-.2286	-.2419	-.5349	-.4168	-.3399
.900		-.2519	-.2858	-.4193	-.2903

ARC11-716 IA14 O1+T12+S12N25+AT11 LEFT VERTICAL (RB1V37) (15 FEB 74)

REFERENCE DATA

SREF = 2.4210 SQ.FT. XMRP = 29.5800 INCHES
LREF = 38.7090 INCHES YMRP = .0000 INCHES
BREF = 59.7090 INCHES ZMRP = .0000 INCHES
SCALE = .0300 SCALE

PARAMETRIC DATA

MACH = .950 ELEVON = .000
RUDDER = .000 SPOBRK = .000

ALPHAO(1) = -8.060 BETAO (1) = -3.980

SECTION (1)LEFT VERTICAL DEPENDENT VARIABLE CP

Z/BV	.1580	.3160	.6000	.8400	.9250
X/CV					
.000	.4831	.4159	.4567	.4865	.4204
.025	.3286	.2752	.3008	.2911	.1928
.050	.3256	.2828	.2857	.2739	.2329
.150	.2225	.2035	.1850	.1560	.0949
.300	.1265	.1086	.0842	.0512	.0171
.520	-.0491	-.1192	-.1027	-.1970	-.3296
.685	-.4125	-.7508	-.9404	-.9940	-.9991
.775	-.3067	-.5116	-.8903	-.9322	-.9668
.900		-.3947	-.6777	-.9394	-.6304

ALPHAO(1) = -8.050 BETAO (2) = .040

SECTION (1)LEFT VERTICAL DEPENDENT VARIABLE CP

Z/BV	.1580	.3160	.6000	.8400	.9250
X/CV					
.000	.5174	.5039	.5794	.5505	.5583
.025	-.0755	-.2478	-.2893	-.2822	-.3667
.050	.1313	.0074	-.0841	-.0729	-.3110
.150	.0249	-.0043	-.0289	-.0636	-.0677
.300	-.0534	-.0448	-.0812	-.0868	-.0630
.520	-.1594	-.2236	-.2292	-.2560	-.3345
.685	-.4343	-.8034	-.9995	-1.0390	-.9954
.775	-.3138	-.5412	-.9611	-.9808	-.9325
.900		-.4012	-.5291	-.5056	-.4423

AR11-716 TA14 (9+712+12N25+AT11 LEFT VERTICAL (RB1V37)

ALPHA (1) = -8.070 BETA (3) = 4.090

SECTION (1)LEFT VERTICAL DEPENDENT VARIABLE CP

Z/BV	.1580	.3160	.6000	.8400	.9250
X/CV					
.000	.4753	.4252	.4183	.3478	.4042
.025	-.3107	.6405	-.7628	-1.0590	-1.1460
.050	-.3999	-.5777	-.7736	1.0610	1.1360
.150	-.1721	-.3664	-.6646	-.6789	-.9863
.300	-.2475	-.2929	-.4303	-.4799	.3457
.520	-.3148	-.3469	-.3728	-.4414	.3463
.685	-.5126	-.7027	-.9559	-.9466	-.9687
.775	-.5261	-.5324	-.6281	-.7100	-.6751
.900		-.4797	-.5967	-.5105	-.5700

ALPHA (1) = -8.100 BETA (4) = 8.150

SECTION (1)LEFT VERTICAL DEPENDENT VARIABLE CP

Z/BV	.1580	.3160	.6000	.8400	.9250
X/CV					
.000	.5261	.1881	.1198	.1058	.2034
.025	-.4848	-.7354	-.9775	-1.1040	-1.2080
.050	-.5233	-.7456	-.9901	-1.1810	-1.2700
.150	-.6104	-.7245	-.9490	-.9070	-1.0630
.300	-.2428	-.6272	-.8817	-.8131	-.8426
.520	-.4586	-.5276	-.8729	-.6294	-.5968
.685	-.5406	-.6912	-.8301	-.5578	-.5293
.775	-.2859	-.5944	-.7363	-.4017	-.5074
.900		-.4038	-.6660	-.3534	-.4849

ALPHA(2) = -4.090 BETA(1) = -8.040

SECTION (1)LEFT VERTICAL DEPENDENT VARIABLE CP

Z/BV	.1580	.3160	.6000	.8400	.9250
X/CV					
.000	.2929	.1367	.1325	.1869	.0887
.025	.4790	.4467	.4446	.4028	.2384
.050	.4401	.4017	.3899	.3663	.3331
.150	.3106	.2932	.2620	.2299	.1477
.300	.2082	.1740	.1431	.0982	.0590
.520	-.0015	-.0745	-.0887	-.1541	-.3153
.685	-.3650	-.6329	-.8041	-.9690	-.9748
.775	-.2882	-.4546	-.6553	-.9032	-.9340
.900		-.2674	-.3415	-.8074	-.8854

ORIGINAL PAGE IS OF POOR QUALITY

ARC11-716 IA14 O1+T12+S12N25+AT11 LEFT VERTICAL (RB1V37)

ALPHAO(2) = -4.080 BETAO (2) = -4.020

SECTION (1)LEFT VERTICAL DEPENDENT VARIABLE CP

Z/BV	.1580	.3160	.6000	.8400	.9250
X/CV					
.000	.4118	.3467	.3687	.3987	.3240
.025	.2320	.1734	.2363	.2365	.0587
.050	.2366	.1891	.2129	.2195	.2056
.150	.1260	.1188	.1209	.1099	.0402
.300	.0438	.0391	.0351	.0085	-.0232
.520	-.1047	-.1489	-.1560	-.2301	-.3840
.685	-.5988	-.7321	-.9634	-1.0060	-1.0200
.775	-.2921	-.4747	-.9136	-.9590	-.9865
.900		-.3425	-.4704	-.6571	-.4545

ALPHAO(2) = -4.080 BETAO (3) = .010

SECTION (1)LEFT VERTICAL DEPENDENT VARIABLE CP

Z/BV	.1580	.3160	.6000	.8400	.9250
X/CV					
.000	.4383	.4052	.4990	.4590	.4709
.025	-.1437	-.3548	-.3433	-.3382	-.4357
.050	.0865	-.1076	-.1654	-.1480	-.3094
.150	-.0548	-.0865	-.0880	-.1108	-.1208
.300	-.1994	-.1082	-.1238	-.1475	-.0941
.520	-.2023	-.2661	-.2773	-.2925	-.3723
.685	-.4351	-.7504	-1.0150	-1.0400	-.9424
.775	-.3062	-.5050	-.9201	-.6923	-.7160
.900		-.4196	-.4845	-.4493	-.3046

ALPHAO(2) = -4.080 BETAO (4) = 4.070

SECTION (1)LEFT VERTICAL DEPENDENT VARIABLE CP

Z/BV	.1580	.3160	.6000	.8400	.9250
X/CV					
.000	.4074	.3605	.3309	.2546	.3061
.025	-.3729	-.6671	-.8281	-1.0170	-1.1710
.050	-.4136	-.6279	-.8307	-1.0210	-1.1730
.150	-.1634	-.3887	-.7124	-.7226	-.8074
.300	-.3057	-.3586	-.4707	-.5513	-.4820
.520	-.4073	-.3995	.4038	-.5192	-.4425
.685	-.5199	-.6196	-.9639	-.8526	-.7049
.775	-.2952	-.5840	-.5732	-.5613	-.4731
.900		-.4488	-.4145	-.4170	-.3574

(F 11-716 TA14 DI+12+5(2)25+AT11 LEFT VERTICAL (FB1V37)

ALPHA(2) = 4.110 BETA(51) = 5.110

SECTION 1/LEFT VERTICAL DEPENDENT VARIABLE CP

Z/Hv	.1580	.3160	.6000	.8400	.9250
X/Cv					
.000	.2893	.1452	.1093	.0200	.1052
.025	-.4972	-.4252	-1.0067	1.0310	-1.0675
.050	-.5422	.8236	-1.0153	1.1110	-1.1240
.150	-.6476	-.7647	-.9754	.9936	-1.0910
.300	-.2994	-.5709	-.9104	-.8502	-.9142
.500	-.3171	-.5534	.8925	-.6561	-.7456
.675	-.4514	-.6875	-.8339	-.5419	-.6142
.775	-.2938	-.5380	-.7563	-.5142	-.5458
.900		-.4240	-.6831	-.4290	-.5169

ALPHA(51) = -.510 BETA(11) = -8.040

SECTION 1/LEFT VERTICAL DEPENDENT VARIABLE CP

Z/Hv	.1580	.3160	.6000	.8400	.9250
X/Cv					
.000	.2575	.0675	.0569	.0468	-.0085
.025	.4174	.3914	.3958	.3535	.1869
.050	.3750	.3504	.3450	.3194	.2835
.150	.2557	.2466	.2213	.1934	.1084
.300	.1652	.1379	.1159	.0708	.0029
.500	-.0241	-.0979	-.1196	-.2246	-.3380
.675	-.3744	-.6562	-.9613	-.9613	-.9729
.775	-.2930	-.4598	-.5333	-.9035	-.9558
.900		-.2642	-.3214	-.5968	-.6935

ALPHA(51) = -.320 BETA(21) = -4.000

SECTION 1/LEFT VERTICAL DEPENDENT VARIABLE CP

Z/Hv	.1580	.3160	.6000	.8400	.9250
X/Cv					
.000	.5614	.2775	.2956	.3135	.2508
.025	.1802	.0747	.1466	.1869	.0219
.050	.1742	.0982	.1378	.1858	.1701
.150	.0516	.0446	.0802	.0649	.0039
.300	-.0546	-.0299	-.0112	-.0209	-.0596
.500	-.1592	-.1935	-.1875	-.2502	-.3941
.675	-.4216	-.6004	-.9659	-.9783	-1.0190
.775	-.2925	-.4262	-.8687	-.9475	-.9935
.900		-.3092	-.4193	-.5887	-.4375

ARC11-716 IA14 O1+T12+S12N25+AT11 LEFT VERTICAL (RB1V37)

ALPHAO(3) = -.320 BETAO (3) = .040

SECTION (1)LEFT VERTICAL DEPENDENT VARIABLE CP

Z/BV	.1580	.3160	.6000	.8400	.9250
X/CV					
.000	.3993	.3330	.4175	.3667	.3932
.025	-.2070	-.4018	-.3853	-.3590	-.4706
.050	.0183	-.1579	-.2125	-.2155	-.3323
.150	-.1059	-.2241	-.1358	-.1530	-.1741
.300	-.2673	-.2123	-.1638	-.1819	-.1500
.520	-.2750	-.2922	-.3099	-.3203	-.4100
.685	-.4383	-.6945	-1.0180	-.8496	-.9324
.775	-.3045	-.4788	-.7926	-.6474	-.5738
.900		-.4128	-.4762	-.5055	-.2764

ALPHAO(3) = -.320 BETAO (4) = 4.090

SECTION (1)LEFT VERTICAL DEPENDENT VARIABLE CP

Z/BV	.1580	.3160	.6000	.8400	.9250
X/CV					
.000	.3498	.2903	.2531	.1648	.2226
.025	-.4168	-.3832	-.8693	-1.0150	-1.1220
.050	-.4581	-.6740	-.8748	-1.0540	-1.1610
.150	-.2324	-.4246	-.7289	-.7247	-.7882
.300	-.3622	-.4174	-.5208	-.5939	-.5874
.520	-.4674	-.4328	-.4249	-.5542	-.4879
.685	-.3942	-.5931	-.8743	-.5859	-.5497
.775	-.3043	-.5143	-.5328	-.4416	-.4621
.900		-.3713	-.4067	-.3509	-.3143

ALPHAO(3) = -.330 BETAO (5) = 8.130

SECTION (1)LEFT VERTICAL DEPENDENT VARIABLE CP

Z/BV	.1580	.3160	.6000	.8400	.9250
X/CV					
.000	.2405	.1021	.0239	-.0867	.0110
.025	-.5053	-.8346	-1.0370	-.9455	-.8115
.050	-.5462	-.8474	-1.0460	-.9638	-.8115
.150	-.7017	-.7997	-1.0130	-.9379	-.8548
.300	-.3442	-.7056	-.9440	-.8455	-.7883
.520	-.5398	-.5614	-.9085	-.6957	-.6759
.685	-.3672	-.6502	-.8418	-.6276	-.5921
.775	-.2911	-.4906	-.7773	-.6043	-.5385
.900		-.3747	-.6612	-.6048	-.4906

DATE 08 JAN 75 TABULATED PRESSURE DATA - TA14A - VOL. 7

ARC11-713 TA14 UA+T12+S12N25+AT11 LEFT VERTICAL (RB1V37)

ALPHAO(4) = 4.030 BETAO (1) = -8.060

SECTION (1)LEFT VERTICAL DEPENDENT VARIABLE CP

X/CV \ Z/BV	.1580	.3160	.6000	.8400	.9250
.000	.1996	.0475	-.0275	-.0267	-.1248
.025	.3488	.3382	.3438	.2996	.1377
.050	.3109	.3068	.2938	.2724	.2378
.150	.2031	.2108	.1821	.1550	.0690
.300	.1289	.1105	.0789	.0423	-.0216
.520	-.0460	-.1141	-.1520	-.2354	-.3639
.685	-.3753	-.6511	-.8789	-.9430	-.9636
.775	-.2834	-.3819	-.4397	-.8088	-.8960
.900		-.2436	-.3055	-.4839	-.4257

ALPHAO(4) = 4.030 BETAO (2) = -4.010

SECTION (1)LEFT VERTICAL DEPENDENT VARIABLE CP

X/CV \ Z/BV	.1580	.3160	.6000	.8400	.9250
.000	.3131	.1958	.2028	.2095	.1469
.025	.0902	-.0413	.0776	.1515	-.0133
.050	.0948	-.0083	.0663	.1284	.1313
.150	-.0507	-.0433	.0194	.0312	-.0293
.300	-.1433	-.1036	-.0332	-.0573	-.0820
.520	-.2320	-.2004	-.2214	-.2832	-.4125
.685	-.3823	-.5914	-.9654	-.9715	-.5996
.775	-.2716	-.4006	-.5781	-.8182	-.5724
.900		-.2829	-.3360	-.3907	-.4961

ALPHAO(4) = 4.020 BETAO (3) = .030

SECTION (1)LEFT VERTICAL DEPENDENT VARIABLE CP

X/CV \ Z/BV	.1580	.3160	.6000	.8400	.9250
.000	.3700	.2746	.3104	.2737	.3000
.025	-.2559	-.4489	-.4657	-.4238	-.4880
.050	-.0416	-.2044	-.2926	-.2462	-.3846
.150	-.1574	-.2682	-.2063	-.2080	-.2308
.300	-.3021	-.2869	-.2154	-.2263	-.1969
.520	-.3594	-.3541	-.3551	-.3639	-.4351
.685	-.3769	-.5786	-1.0120	-.5688	-.6411
.775	-.2961	-.4738	-.5958	-.4969	-.3404
.900		-.3723	-.3535	-.3861	-.2125

ARC11-716 IA14 O1+T12+S12N25+AT11 LEFT VERTICAL (RB1V37)

ALPHAO(4) = 4.020 BETAO (4) = 4.100

SECTION (1)LEFT VERTICAL DEPENDENT VARIABLE CP

Z/BV	.1580	.3160	.6000	.8400	.9250
X/CV					
.000	.3024	.2271	.1764	.0754	.1305
.025	-.4754	-.7237	-.9044	-.8920	-.8218
.050	-.4043	-.7145	-.9293	-.9331	-.8344
.150	-.2772	-.4649	-.7150	-.7766	-.8381
.300	-.4120	-.4723	-.5019	-.6523	-.7863
.520	-.4795	-.4158	-.4181	-.5285	-.5663
.685	-.3415	-.5181	-.7471	-.4950	-.4381
.775	-.2713	-.4124	-.4833	-.3610	-.3404
.900		-.3299	-.3868	-.2928	-.2435

ALPHAO(4) = 4.010 BETAO (5) = 8.140

SECTION (1)LEFT VERTICAL DEPENDENT VARIABLE CP

Z/BV	.1580	.3160	.6000	.8400	.9250
X/CV					
.000	.1807	.0601	-.0633	-.1947	-.1059
.025	-.5604	-.8410	-1.0500	-.9418	-.8178
.050	-.6004	-.8618	-1.0560	-.9662	-.8251
.150	-.7222	-.8169	-1.0250	-.9367	-.8437
.300	-.4007	-.7147	-.9580	-.8428	-.7756
.520	-.4648	-.5366	-.9080	-.7172	-.6600
.685	-.3149	-.5697	-.8672	-.6480	-.6265
.775	-.2670	-.4205	-.7558	-.6508	-.5940
.900		-.3160	-.5289	-.6363	-.5223

ALPHAO(5) = 7.940 BETAO (1) = -8.030

SECTION (1)LEFT VERTICAL DEPENDENT VARIABLE CP

Z/BV	.1580	.3160	.6000	.8400	.9250
X/CV					
.000	.1395	-.0188	-.1094	-.1384	-.2350
.025	.2347	.2786	.3096	.2678	.0935
.050	.2011	.2480	.2554	.2409	.2030
.150	.1015	.1677	.1558	.1373	.0415
.300	.0506	.0747	.0596	.0290	-.0308
.520	-.0829	-.1140	-.1741	-.2503	-.3586
.685	-.3802	-.6326	-.7515	-.9115	-.9084
.775	-.2583	-.3820	-.3564	-.5283	-.5872
.900		-.2465	-.2818	-.3932	-.3566

ARC11-716 IA14 01+T12+S12+R25+AT11 LEFT VERTICAL (RB1 V37)

ALPHA(1) = 7.940 BETA(2) = -4.310

SECTION 1)LEFT VERTICAL DEPENDENT VARIABLE CP

X/CV \ Z/BV	.1580	.3160	.6000	.8400	.9250
.000	.2379	.1381	.1577	.1151	.0438
.025	-.1344	-.1213	.0685	.1312	-.0346
.050	-.0484	-.0715	.0526	.1021	.1227
.150	-.1482	-.0910	-.0112	.0291	-.0428
.300	-.2188	-.1305	-.0448	-.0509	-.0920
.520	-.2558	-.2157	-.2272	-.2896	-.3731
.685	-.3584	-.5796	-.8892	-.8850	-.5365
.775	-.2627	-.3746	-.4625	-.7220	-.4942
.900		-.2778	-.2938	-.3259	-.3476

ALPHA(5) = 7.940 BETA(3) = .040

SECTION (1)LEFT VERTICAL DEPENDENT VARIABLE CP

X/CV \ Z/BV	.1580	.3160	.6000	.8400	.9250
.000	.2834	.2067	.2117	.2105	.2555
.025	-.2946	-.5056	-.5425	-.4582	-.4948
.050	-.1191	-.2823	-.4490	-.2648	-.4160
.150	-.2041	-.3206	-.2774	-.2005	-.1704
.300	-.3520	-.3507	-.2634	-.2016	-.1393
.520	-.3900	-.3535	-.3523	-.3420	-.3726
.685	-.3083	-.4501	-.6643	-.5531	-.3289
.775	-.2656	-.3853	-.4018	-.3246	-.2143
.900		-.3080	-.2660	-.2026	-.0995

ALPHA(5) = 7.930 BETA(4) = 4.110

SECTION (1)LEFT VERTICAL DEPENDENT VARIABLE CP

X/CV \ Z/BV	.1580	.3160	.6000	.8400	.9250
.000	.2078	.1607	.1066	-.0166	.0287
.025	-.3198	-.7509	-.9053	-.9025	-.8401
.050	-.2058	-.6977	-.9051	-.9170	-.8347
.150	-.2628	-.4672	-.7890	-.8029	-.8461
.300	-.4257	-.4788	-.5415	-.7328	-.8432
.520	-.4752	-.4225	-.4446	-.5964	-.5528
.685	-.3508	-.4569	-.6426	-.3824	-.3336
.775	-.2631	-.3639	-.4578	-.3108	-.2670
.900		-.2963	-.3619	-.2481	-.2126

ARC11-716 IA14 C1+T12+S12N25+AT11 LEFT VERTICAL (RB1V37)

ALPHAO(5) = 7.920 BETAO (5) = 8.180

SECTION (1)LEFT VERTICAL DEPENDENT VARIABLE CP

Z/BV	.1580	.3160	.6000	.8400	.9250
X/CV					
.000	.1032	-.0108	-.1684	-.3259	-.2222
.025	-.5513	-.9194	-1.0420	-.8830	-.7435
.050	-.4875	-.9345	-1.0450	-.9021	-.7417
.150	-.3709	-.8689	-1.0200	-.8712	-.6978
.300	-.5275	-.6988	-.9721	-.7925	-.6449
.520	-.4459	-.3705	-.9127	-.7210	-.6037
.685	-.3056	-.3279	-.9240	-.6769	-.5797
.775	-.2689	-.3148	-.4952	-.7024	-.5322
.900		-.2920	-.2823	-.6476	-.5268

ARC1L-716 (A14 D1+[illegible]+512N25+AT11 LEFT VERTICAL (RB1V38) (15 FEB 74)

REFERENCE DATA

SREF = 2.4210 SQ.FT. XMRP = 29.5800 INCHES
CREF = 58.7090 INCHES YMRP = .0000 INCHES
BREF = 58.7090 INCHES ZMRP = .0000 INCHES
SCALE = .0300 SCALE

PARAMETRIC DATA

MACH = .050 ELEVON = .000
RUDDER = .000 SPOBRK = .000

ALPHAO(1) = -8.080 BETAO (1) = -8.020

SECTION (1)LEFT VERTICAL DEPENDENT VARIABLE CP

Z/BV	.1580	.3160	.6000	.8400	.9250
X/CV					
.000	.4335	.3155	.3447	.4086	.3177
.025	.6449	.6059	.6000	.5586	.4041
.050	.6018	.5661	.5487	.5288	.4927
.150	.4801	.4513	.4234	.3931	.3154
.300	.3719	.3348	.3118	.2734	.2241
.520	.1707	.1023	.0967	-.0026	-.1300
.685	-.3947	-.6545	-.6782	-.7335	-.7413
.775	-.3294	-.4002	-.6162	-.6700	-.7051
.900		-.3505	-.5331	-.6564	-.6767

ALPHAO(1) = -8.070 BETAO (2) = -4.980

SECTION (1)LEFT VERTICAL DEPENDENT VARIABLE CP

Z/BV	.1580	.3160	.6000	.8400	.9250
X/CV					
.000	.5423	.4746	.5101	.5486	.4735
.025	.4854	.4362	.4545	.4421	.2901
.050	.4680	.4131	.4257	.4163	.4033
.150	.3558	.3360	.3210	.3053	.2432
.300	.2591	.2382	.2300	.2044	.1818
.520	.0931	.0444	.0440	-.0302	-.1718
.685	-.4038	-.7211	-.7193	-.7[illegible]4	-.7701
.775	-.3279	-.4739	-.6767	-.7089	-.7453
.900		-.3627	-.6214	-.7105	-.7210

ARC11-716 IA14 O4+T12+S12N25+AT11 LEFT VERTICAL JRB1V38

ALPHAO(1) = -8.060 BETAO (3) = .030

SECTION (1)LEFT VERTICAL DEPENDENT VARIABLE CP

Z/BV	.1580	.3160	.6000	.8400	.9250
X/CV					
.000	.5970	.5793	.6582	.6330	.6406
.025	.0640	-.1348	-.1417	-.1444	-.2350
.050	.2561	.0866	-.0138	.0424	-.1201
.150	.1418	.0623	.0997	.0694	.0569
.300	.0032	.0672	.0587	.0471	.0900
.520	-.0109	-.0706	-.0821	-.0934	-.1702
.685	-.4279	-.7850	-.7633	-.7928	-.7676
.775	-.5441	-.5395	-.7489	-.7638	-.7695
.900		-.4282	-.7370	-.7635	-.7103

ALPHAO(1) = -8.070 BETAO (4) = 4.120

SECTION (1)LEFT VERTICAL DEPENDENT VARIABLE CP

Z/BV	.1580	.3160	.6000	.8400	.9250
X/CV					
.000	.5591	.5287	.5213	.4618	.5084
.025	-.1506	-.4440	-.6211	-.9009	-.9561
.050	-.2001	-.4068	-.6429	-.9028	-.9431
.150	.0223	-.2123	-.4485	-.7130	-.7562
.300	-.1045	-.1594	-.2754	-.2440	-.3955
.520	-.1945	-.1948	-.2438	-.2261	-.1872
.685	-.4613	-.7969	-.7563	-.8027	-.7654
.775	-.3764	-.5587	-.7661	-.7886	-.7892
.900		-.4372	-.5479	-.7730	-.7189

ALPHAO(1) = -8.100 BETAO (5) = 8.160

SECTION (1)LEFT VERTICAL DEPENDENT VARIABLE CP

Z/BV	.1580	.3160	.6000	.8400	.9250
X/CV					
.000	.4516	.3162	.3113	.2449	.3200
.025	-.3148	-.5961	-.7597	-.8888	-1.0030
.050	-.3537	-.6014	-.7676	-.9680	-1.0380
.150	-.4665	-.5435	-.7414	-.7231	-.9365
.300	-.1018	-.4513	-.6682	-.6662	-.7177
.520	-.2820	-.3788	-.6761	-.6397	-.5421
.685	-.5415	-.7350	-.8893	-.7047	-.8111
.775	-.4038	-.5893	-.7387	-.5855	-.5812
.900		-.5404	-.5907	-.5161	-.4632

ARC11-716 TA14 O1+T12+S12N25+AT11 LEFT VERTICAL (RB1V38)

ALPHAO(2) = -4.080 BETAO (1) = -8.040

SECTION (1)LEFT VERTICAL DEPENDENT VARIABLE CP

Z/BV	.1580	.3160	.6000	.8400	.9250
X/CV					
.000	.4041	.2836	.2793	.3191	.2308
.025	.5696	.5362	.5344	.5305	.3414
.050	.5335	.4948	.4864	.4716	.4409
.150	.4083	.3888	.3705	.3465	.2657
.300	.3144	.2864	.2634	.2277	.1843
.520	.1299	.0667	.0617	-.0367	-.1846
.685	-.3933	-.6571	-.6949	-.7465	-.7604
.775	-.3238	-.4059	-.6326	-.6827	-.7260
.900		-.3509	-.5362	-.6678	-.7025

ALPHAO(2) = -4.090 BETAO (2) = -4.020

SECTION (1)LEFT VERTICAL DEPENDENT VARIABLE CP

Z/BV	.1580	.3160	.6000	.8400	.9250
X/CV					
.000	.5162	.4521	.4784	.4975	.4498
.025	.3474	.2659	.3140	.3218	.1627
.050	.3489	.2822	.2995	.3053	.3093
.150	.2299	.2201	.2149	.2160	.1622
.300	.1475	.1446	.1321	.1368	.1233
.520	.0181	-.0211	-.0482	-.0670	-.2086
.685	-.4127	-.7540	-.7523	-.7707	-.7953
.775	-.5160	-.4961	-.7123	-.7367	-.7765
.900		-.3755	-.6616	-.7391	-.7556

ALPHAO(2) = -4.090 BETAO (3) = .040

SECTION (1)LEFT VERTICAL DEPENDENT VARIABLE CP

Z/BV	.1580	.3160	.6000	.8400	.9250
X/CV					
.000	.5565	.5115	.5657	.5506	.5622
.025	-.0042	-.1873	-.2200	-.2098	-.2941
.050	.2088	.0275	-.1666	-.0432	-.1856
.150	.0896	-.0251	.0442	.0313	-.0017
.300	-.0651	-.0513	.0174	-.0033	.0552
.520	-.0983	-.1078	-.1220	-.1238	-.2046
.685	-.4081	-.7694	-.7771	-.8033	-.7868
.775	-.3298	-.5117	-.7623	-.7765	-.7870
.900		-.4293	-.7473	-.7830	-.7393

ARC11-716 IA14 O1+T12+S12N25+AT11 LEFT VERTICAL (RB1V38)

ALPHAO(2) = -4.090 BETAO (4) = 4.080

SECTION (1)LEFT VERTICAL DEPENDENT VARIABLE CP

Z/BV	.1580	.3160	.6000	.8400	.9250
X/CV					
.000	.5073	.4699	.4491	.3784	.4259
.025	-.1995	-.4678	-.6650	-.9224	-.9736
.050	-.2504	-.4483	-.6986	-.9300	-.9489
.150	-.0297	-.2381	-.4336	-.7047	-.8085
.300	-.1569	-.2151	-.3136	-.2728	-.2722
.520	-.2561	-.2515	-.2803	-.2796	-.2286
.685	-.4748	-.7559	-.7643	-.8316	-.7805
.775	-.3571	-.5297	-.8001	-.8055	-.8019
.900		-.4596	-.4636	-.7013	-.7290

ALPHAO(2) = -4.100 BETAO (5) = 8.120

SECTION (1)LEFT VERTICAL DEPENDENT VARIABLE CP

Z/BV	.1580	.3160	.6000	.8400	.9250
X/CV					
.000	.3931	.2885	.2498	.1576	.2376
.025	-.3195	-.6147	-.7780	-.8964	-.9865
.050	-.3566	-.6152	-.7870	-.9486	-1.0360
.150	-.4791	-.5599	-.7605	-.7927	-.9095
.300	-.1467	-.4696	-.6828	-.7141	-.6633
.520	-.3578	-.4012	-.6786	-.6731	-.5309
.685	-.5579	-.6919	-.8736	-.6611	-.5837
.775	-.3463	-.5793	-.7134	-.5606	-.5092
.900		-.5408	-.5913	-.5091	-.4619

ALPHAO(3) = -.310 BETAO (1) = -8.040

SECTION (1)LEFT VERTICAL DEPENDENT VARIABLE CP

Z/BV	.1580	.3160	.6000	.8400	.9250
X/CV					
.000	.3605	.2424	.2294	.2426	.1533
.025	.4965	.4548	.4682	.4396	.2835
.050	.4547	.4186	.4201	.4092	.3861
.150	.3325	.3228	.3107	.3002	.2204
.300	.2400	.2231	.2195	.1899	.1455
.520	.0823	.0283	.0183	-.0647	-.2184
.685	-.4087	-.6906	-.7055	-.7427	-.7651
.775	-.3206	-.4213	-.6432	-.6934	-.7356
.900		-.3501	-.5308	-.6728	-.7155

ARC11-716 TA14 OL+T12+S12N25+A311 LEFT VERTICAL (RB1 V38)

ALPHA(3) = -.320 BETA(2) = -4.010

SECTION 11)LEFT VERTICAL DEPENDENT VARIABLE CP

Z/B:	.1580	.3160	.6000	.8400	.9250
X/C:					
.000	.4696	.5867	.4111	.4115	.3716
.025	.2928	.1762	.2476	.2603	.1026
.050	.2933	.2072	.2540	.2448	.2550
.150	.1580	.1503	.1594	.1635	.1349
.300	.0766	.0924	.0846	.0899	.0713
.525	-.0743	-.0890	-.0929	-.1095	-.2440
.685	-.4217	-.7561	-.7693	-.7764	-.8119
.775	-.3180	-.4969	-.7420	-.7511	-.7948
.900		-.5863	-.6967	-.7584	-.7840

ALPHA(3) = -.330 BETA(3) = .040

SECTION (11)LEFT VERTICAL DEPENDENT VARIABLE CP

Z/B:	.1580	.3160	.6000	.8400	.9250
X/C:					
.000	.5151	.4495	.4775	.4705	.4890
.025	-.0584	-.2334	-.2914	-.2829	-.3167
.050	.1522	-.0225	-.2[illegible]	-.1061	-.2231
.150	.0484	.0744	-.0[illegible]	-.0177	-.0438
.300	-.1063	-.1052	-.0[illegible]	-.0477	.0110
.525	-.1516	-.1562	-.1631	-.1603	-.2379
.685	-.4170	-.7419	-.7919	-.8068	-.8098
.775	-.3228	-.5059	-.7813	-.7851	-.8143
.900		-.4[illegible]4	-.6637	-.7945	-.76[illegible]

ALPHA(3) = -.320 BETA(4) = 4.090

SECTION (11)LEFT VERTICAL DEPENDENT VARIABLE CP

Z/B:	.1580	.3160	.6000	.8400	.9250
X/C:					
.000	.4532	.4063	.3708	.2942	.3451
.025	-.2414	-.4888	-.6955	-.9235	-.9658
.050	-.2[illegible]	.4843	-.7360	-.9417	-.9518
.150	-.1948	-.2521	-.4545	-.6809	-.8397
.300	.1983	-.2630	-.3559	-.3215	-.2623
.525	-.3[illegible]3	-.2963	-.3151	-.3257	-.2647
.685	-.4922	-.6983	-.7825	-.8286	-.7984
.775	-.3162	-.5058	-.8092	-.8075	-.8167
.900		-.4555	-.4590	-.5144	-.5816

ARC11-716 1A14 C1+T12+S12N25+AT11 LEFT VERTICAL VB1V3F

ALPHAO(3) = -.330 BETAO (5) = 8.130

SECTION (1)LEFT VERTICAL DEPENDENT VARIABLE CP

Z/BV	.1580	.3160	.6000	.8400	.9250
X/CV					
.000	.3424	.2433	.1846	.0890	.1606
.025	-.3542	-.6249	-.8087	-.9009	-.9720
.050	-.3857	-.6348	-.8140	-.9439	-1.0180
.150	-.5540	-.5825	-.7924	-.8039	-.8788
.300	-.1799	-.5123	-.7135	-.7259	-.6816
.520	-.3893	-.4521	-.6935	-.6629	-.5615
.685	-.5936	-.6654	-.8431	-.6002	-.5974
.775	-.3070	-.6050	-.6991	-.5128	-.5005
.900		-.5320	-.6074	-.4593	-.4823

ALPHAO(4) = 4.020 BETAO (1) = -8.050

SECTION (1)LEFT VERTICAL DEPENDENT VARIABLE CP

Z/BV	.1590	.3160	.6000	.8400	.9250
X/CV					
.000	.2859	.1659	.1469	.1387	.0547
.025	.4177	.3721	.3947	.3862	.2228
.050	.3745	.3388	.3504	.3560	.3352
.150	.2357	.2478	.2426	.2579	.1770
.300	.1598	.1625	.1715	.1528	.1307
.520	.0268	-.0112	-.0287	-.0912	-.2606
.685	-.4402	-.6833	-.7171	-.7461	-.7784
.775	-.3011	-.4125	-.6592	-.7022	-.7511
.900		-.3446	-.4586	-.6661	-.7313

ALPHAO(4) = 4.020 BETAO (2) = -4.020

SECTION (1)LEFT VERTICAL DEPENDENT VARIABLE CP

Z/BV	.1580	.3160	.6000	.8400	.9250
X/CV					
.000	.4165	.3086	.3241	.3111	.2696
.025	.2104	.0841	.1654	.1861	.0330
.050	.2276	.1001	.1583	.1727	.1973
.150	.0932	.0549	.0841	.1022	.0468
.300	-.0254	.0129	.0234	.0320	.0137
.520	-.0942	-.1123	-.1449	-.1564	-.3032
.685	-.4402	-.7711	-.7776	-.7915	-.8365
.775	-.3320	-.5123	-.7712	-.7715	-.8227
.900		-.3915	-.7219	-.7788	-.8180

SECTION 716 TA14 C1+T12+S12N25+AT11 LEFT VERTICAL (RB1V30)

ALPHAC (1) = 4.020 BETAC (1) = .030

SECTION (11)LEFT VERTICAL DEPENDENT VARIABLE CP

X/CV \ Z/BV	.1580	.3160	.6000	.8400	.9250
.000	.4608	.3755	.3776	.3654	.3442
.025	-.1205	-.2810	-.3744	-.3127	.3315
.050	.1138	-.0466	-.3554	-.1581	-.2798
.150	-.0105	-.1311	-.1163	-.0651	-.1358
.300	-.1640	-.1974	-.0928	-.0985	-.0425
.525	-.2212	-.2128	-.2155	-.2014	-.2412
.685	-.4405	-.6979	-.8135	-.8170	-.8346
.775	-.5143	-.4755	-.8124	-.8035	-.8274
.900		-.4214	-.4422	-.7495	-.7656

ALPHAC (4) = 4.010 BETAC (4) = 4.110

SECTION (11)LEFT VERTICAL DEPENDENT VARIABLE CP

X/CV \ Z/BV	.1580	.3160	.6000	.8400	.9250
.000	.4937	.3350	.2859	.2560	.2576
.025	-.2907	-.5207	-.7340	-.9175	-.9479
.050	-.5299	-.5481	-.7686	-.9551	-.9453
.150	.1457	.3278	.5171	-.6944	-.8669
.300	-.2427	-.3219	-.5891	-.5835	-.5476
.525	-.3822	-.5628	-.5467	-.5739	-.5264
.685	-.4245	-.5018	-.8133	-.8270	-.8180
.775	-.2842	-.5207	-.6774	-.7723	-.8191
.900		-.4440	-.4382	-.4975	-.4512

ALPHAC (4) = 4.000 BETAC (5) = 8.160

SECTION (11)LEFT VERTICAL DEPENDENT VARIABLE CP

X/CV \ Z/BV	.1580	.3160	.6000	.8400	.9250
.000	.2658	.1898	.1151	.0076	.0680
.025	-.4432	-.6396	-.8264	-.9013	-.9641
.050	-.4830	-.6556	-.8358	-.9230	-1.0010
.150	-.5993	-.6187	-.7112	-.8509	-.9[illegible]54
.300	-.2586	-.5477	-.7288	-.7583	-.7819
.525	-.4358	-.4972	-.6956	-.6691	-.6127
.685	-.3905	-.6388	-.8036	-.5884	-.5950
.775	-.2984	-.5769	-.6882	-.5315	-.5683
.900		-.4027	-.6761	-.5093	-.5216

ARC11-716 IA14 OL+T12+S12N25+AT11 LEFT VERTICAL (RB1V38)

ALPHAO(5) = 7.930 BETAO (1) = -6.010

SECTION (1)LEFT VERTICAL DEPENDENT VARIABLE CP

Z/BV	.1580	.3160	.6000	.8400	.9250
X/CV					
.000	.5209	.1274	.0829	.0418	-.0500
.025	.5379	.2964	.5427	.5297	.1640
.050	.4068	.2702	.5005	.2999	.2829
.150	.1658	.1895	.2081	.2145	.1460
.300	.0897	.1144	.1388	.1185	.1035
.520	-.0215	-.0290	-.0699	-.1224	-.2746
.685	-.5444	-.7037	-.7507	-.7439	-.7787
.775	-.5549	-.4665	-.6705	-.7108	-.7502
.900		-.5495	-.4709	-.6631	-.7212

ALPHAO(5) = 7.930 BETAO (2) = -3.990

SECTION (1)LEFT VERTICAL DEPENDENT VARIABLE CP

Z/BV	.1580	.3160	.6000	.8400	.9250
X/CV					
.000	.4200	.2581	.2474	.2199	.1827
.025	.1104	.0215	[illegible]	.1208	-.0339
.050	.1599	.0424	.0758	.1056	.1373
.150	.0289	-.0311	.0187	.0454	-.0026
.300	.1155	.0638	.0515	-.0189	-.0076
.520	-.1574	-.1601	.1817	-.2012	-.3093
.685	-.4810	-.7565	-.7969	-.8119	-.8348
.775	-.5827	-.5062	-.7760	-.7875	[illegible]
.900		-.5616	-.6622	-.7829	-.6118

ALPHAO(5) = 7.930 BETAO (3) = .040

SECTION (1)LEFT VERTICAL DEPENDENT VARIABLE CP

Z/BV	.1580	.3160	.6000	.8400	.9250
X/CV					
.000	.4194	.3119	.2940	.2619	.2947
.025	-.1612	-.3206	-.4173	-.4090	-.3854
.050	.0757	-.1454	-.3719	-.2565	-.3550
.150	-.0917	-.1782	-.1866	-.1349	-.1599
.300	-.2255	-.2573	-.1726	-.1603	-.1096
.520	-.2904	-.2725	-.2657	-.2502	-.3239
.685	-.4690	-.6458	-.8348	-.8429	-.8584
.775	-.5201	-.4551	-.8234	-.8342	-.8492
.900		-.4632	-.4616	-.5159	-.4529

AR-11 716 TA.4 OA+ 2+-12N25+AT11 LEFT VERTICAL (RB1V38)

ALPHA = 7.950 BETAO (DEG) = 4.11

SECTION 1-LEFT VERTICAL DEPENDENT VARIABLE CP

Z/PV	.1580	.3160	.6000	.8400	.9250
X/C					
.000	.4147	.2847	.2098	.1220	.1731
.025	-.2903	-.5355	-.7659	-.9400	-.9516
.050	-.2664	-.5526	-.5147	-.9795	-.9586
.150	-.3344	-.5298	-.5158	-.9435	-.8545
.300	-.4066	-.3551	-.4664	-.4160	.0234
.500	-.3313	-.4170	-.3615	-.3150	.3557
.675	.4348	-.4868	-.7529	-.5114	-.6060
.775	-.2744	-.5418	-.5111	-.5461	.5955
.900		-.3338	-.4295	-.7415	-.6056

ALPHA 5.0 = 7.910 BETA 5.0 = 8.200

SECTION 1-LEFT VERTICAL DEPENDENT VARIABLE CP

Z/PV	.1580	.3160	.6000	.8400	.9250
X/C					
.000	.2956	.1488	.2455	-.1031	-.0413
.025	-.4605	-.6880	-.7425	-.9325	-.9338
.050	-.5158	-.7049	-.6481	-.9115	-.9560
.150	-.5318	-.6673	-.7331	-.9427	-.9125
.300	-.5363	-.4758	-.7425	-.7375	-.8665
.500	-.5[illegible]	-.4346	-.6[illegible]	-.[illegible]	-.[illegible]
.675	-.5658	-.4446	-.7[illegible]	-.[illegible]	-.9751
.775	[illegible]	.4172	-.6[illegible]	-.6117	-.6274
.900		.3984	-.6441	-.6[illegible]	-.47[illegible]

ORIGINAL PAGE IS
OF POOR QUALITY

ARC11-716 IA14 O1+T12+S12N25+AT11 LEFT VERTICAL (RB1V39) (15 FEB 74)

REFERENCE DATA

SREF = 2.4210 SQ.FT. XMRP = 29.5800 INCHES
LREF = 38.7090 INCHES YMRP = .0000 INCHES
BREF = 38.7090 INCHES ZMRP = .0000 INCHES
SCALE = .0300 SCALE

PARAMETRIC DATA

MACH = 1.150 ELEVON = .000
RUDDER = .000 SPDBRK = .000

ALPHAO(1) = -8.110 BETAO (1) = -8.020

SECTION (1)LEFT VERTICAL DEPENDENT VARIABLE CP

Z/BV	.1580	.3160	.6000	.8400	.9250
X/CV					
.000	.5255	.4249	.4498	.4991	.4177
.025	.7034	.6583	.6548	.6255	.4632
.050	.5650	.6210	.6112	.5915	.5721
.150	.5366	.5154	.4907	.4761	.4009
.300	.4350	.4043	.3875	.3629	.3327
.520	.2585	.1998	.1996	.1188	-.0251
.685	-.3526	-.5079	-.5113	-.5585	-.5744
.775	-.3104	-.4112	-.4611	-.5020	-.5490
.900		-.2674	-.3999	-.5010	-.5241

ALPHAO(1) = -8.100 BETAO (2) = -4.000

SECTION (1)LEFT VERTICAL DEPENDENT VARIABLE CP

Z/BV	.1580	.3160	.6000	.8400	.9250
X/CV					
.000	.6523	.6051	.6393	.6563	.6064
.025	.5900	.4261	.4590	.4591	.2858
.050	.4978	.4416	.4475	.4456	.4430
.150	.3948	.3774	.3698	.3600	.3017
.300	.3079	.2979	.2851	.2757	.2792
.520	.1774	.1345	.1160	.0833	-.0414
.685	-.4115	-.5738	-.5546	-.5910	-.6035
.775	-.3176	-.5115	-.5304	-.5561	-.5922
.900		-.3350	-.4971	-.5651	-.5771

ARC11-TIN IA14 OG+T12+S12+N25+A111 LEFT VERTICAL (R01V39)

ALPHA ( ) = -8.090 BETA (3) = .030

SECTION 1)LEFT VERTICAL DEPENDENT VARIABLE CP

X/CV \ Z/BV	.1580	.3160	.6000	.8400	.9250
.000	[illegible]	.6595	.7132	.7319	[illegible]
.025	.12[illegible]	-.0[illegible]5	-.0644	-.0436	-.1469
.050	.3561	.1835	-.0118	.1275	-.3094
.150	.2[illegible]	.1394	.1961	.1771	.1[illegible]
.300	[illegible]	.1023	.1537	.1431	.2176
.520	.0637	.0416	.0258	.0255	-.1345
.685	-.4375	-.6273	-.6[illegible]	-.6273	[illegible]
.775	-.3350	-.5933	-.5916	-.6[illegible]08	-.6065
.900		-.3988	-.5790	-.5[illegible]	-.5[illegible]

ALPHA ( ) = -8.100 BETA (4) = 4.080

SECTION (1)LEFT VERTICAL DEPENDENT VARIABLE CP

X/CV \ Z/BV	.1580	.3160	.6000	[illegible]	.9250
.000	.6487	.6204	[illegible]	.3695	.5957
.025	-.0[illegible]8	-.2863	-.5[illegible]	-.7339	-.7804
.050	-.0651	-.2537	-.5540	-.7[illegible]	-.7638
.150	.1388	-.0702	-.2452	-.5775	-.5712
.300	.0173	-.0500	-.1449	-.1436	-.3459
.520	-.0775	-.0[illegible]22	-.1351	-.0[illegible]	-.0720
.685	-.4469	-.[illegible]543	-.5[illegible]	-.6[illegible]	-.[illegible]3
.775	-.3437	-.3929	-.6[illegible]	-.6333	-.[illegible]37
.900		.4142	-.6216	-.6243	-.5544

ALPHA ( ) = -8.130 BETA (5) = 9.160

SECTION (1) LEFT VERTICAL DEPENDENT VARIABLE CP

X/CV \ Z/BV	.1580	.3160	.6000	.8400	.9250
.000	.5117	.4132	.4010	.3334	.4102
.025	-.1034	-.4577	-.6163	-.7603	-.8465
.050	-.2234	-.4562	-.6206	-.8039	-.8[illegible]4
.150	-.3[illegible]1	-.4122	-.5941	-.6622	-.7739
.300	-.0073	-.3311	-.3242	-.5596	-.6512
.520	-.1694	-.2767	-.5256	-.5111	-.4392
.685	-.4634	-.6643	-.7446	-.6988	-.7533
.775	-.3637	-.5353	-.7245	-.5818	-.7342
.900		-.4749	-.5458	-.4690	-.5151

ARC11-716 IA14 O1+T12+S12N25+AT11 LEFT VERTICAL (PB1V59)

ALPHAO(2) = -4.100 BETAO (1) = -8.030

SECTION (1)LEFT VERTICAL DEPENDENT VARIABLE CP

Z/BV	.1580	.3160	.6000	.8400	.9250
X/CV					
.000	.4794	.3788	.3868	.4162	.3413
.025	.6294	.5792	.5797	.5555	.3962
.050	.5863	.5412	.5332	.5221	.5103
.150	.4556	.4440	.4205	.4210	.3509
.300	.3618	.3408	.3275	.3129	.2906
.520	.2078	.1461	.1367	.0773	-.0678
.685	-.3953	-.5507	-.5483	-.5843	-.5967
.775	-.3138	-.4577	-.4974	-.5280	-.5720
.900		-.2997	-.4348	-.5244	-.5511

ALPHAO(2) = -4.110 BETAO (2) = -4.010

SECTION (1)LEFT VERTICAL DEPENDENT VARIABLE CP

Z/BV	.1580	.3160	.6000	.8400	.9250
X/CV					
.000	.5962	.5421	.5719	.5770	.5303
.025	.4292	.3312	.3861	.3951	.2273
.050	.4314	.3545	.3811	.3926	.3899
.150	.3136	.3026	.3173	.3021	.2567
.300	.2310	.2379	.2384	.2300	.2265
.520	.1254	.0912	.0629	.0466	-.0004
.685	-.4040	-.5918	-.5815	-.6057	-.6236
.775	-.2961	-.5122	-.5533	-.5776	-.6149
.900		-.3325	-.5188	-.5883	-.6077

ALPHAO(2) = -4.110 BETAO (3) = .040

SECTION (1)LEFT VERTICAL DEPENDENT VARIABLE CP

Z/BV	.1580	.3160	.6000	.8400	.9250
X/CV					
.000	.6396	.5988	.6300	.6190	.6407
.025	.1026	-.0713	-.1602	-.1264	-.1860
.050	.3112	.1317	-.1147	.0389	-.0709
.150	.2016	.0897	.1074	.1390	.1908
.300	.0581	.0328	.1116	.0967	.1725
.520	-.0106	-.0057	-.0084	-.0007	-.0742
.685	-.3886	-.6400	-.6063	-.6300	-.6160
.775	-.2926	-.5090	-.5964	-.6058	-.6195
.900		-.3635	-.5823	-.6190	-.5871

APOLLO 713 A14 (1+12+[illegible]2N2S+AT11 LEFT VERTICAL [illegible]

ALPHA[illegible] = 4.110 BETA0 (1) = 4.170

SECTION	1:LEFT VERTICAL				DEPENDENT VARIABLE [illegible]
Z/B=	.1580	.3160	.6000	.8400	.9250
X/C=					
[illegible]	.5855	.5856	.5310	.4514	.5033
[illegible]	-.0811	-.3248	-.5515	-.7477	-.8034
[illegible]	-.1250	-.3120	-.5983	-.7543	[illegible]
.150	.0141	-.1237	.2897	-.5979	-.6143
[illegible]	[illegible]	-.1066	[illegible]	[illegible]	[illegible]
[illegible]	-.1375	-.1372	-.1873	-.3424	[illegible]
.685	-.4350	-.6841	[illegible]	[illegible]	-.5172
.775	-.3752	-.5376	-.6461	[illegible]	-.6256
.900		-.4040	-.5502	[illegible]	-.6258

ALPHA(2) = -4.130 BETA0 (1) = 8.110

SECT	1:LEFT VERTICAL				DEPENDENT VARIABLE [illegible]
Z/B=	.1580	.3160	.6000	.8400	.9250
X/C=					
[illegible]	.1756	.3947	.3521	.2793	.3474
[illegible]	-.2[illegible]38	-.4646	-.[illegible]274	-.7556	-.8447
.020	-.2399	-.4728	-.6359	-.8008	-.8939
.150	-.3621	-.4206	-.6270	-.6448	-.7754
.300	-.0447	-.3497	-.5357	-.5537	-.5532
.520	-.2330	-.3070	-.5183	-.5122	-.4544
.685	-.4713	-.6487	-.7393	-.6744	-.7445
.775	-.3230	-.5113	-.[illegible]298	-.5688	-.6653
.900		-.4756	-.5105	-.4633	-.4693

ALPHA(3) = -.330 BETA0 (1) = -4.020

SECTION	1:LEFT VERTICAL				DEPENDENT VARIABLE [illegible]
Z/B=	.1580	.3160	.6000	.8400	.9250
X/C=					
.001	.5290	.4571	.4880	.4754	.4346
.025	.3705	.2644	.3410	.3497	.1790
.050	.3765	.2713	.3325	.3311	.3443
.150	.2552	.2375	.2577	.2570	.2553
.300	.1531	.1302	.1313	.1974	.1779
.520	.0818	.0551	.0202	.0024	-.1282
.685	-.4262	-.6150	-.6034	-.6193	-.6490
.775	-.2972	-.5174	-.5796	-.5944	-.6354
.900		-.3455	-.5445	-.6051	-.6314

ARC11-716 IA14 O1+T12+S12N25+AT11 LEFT VERTICAL (RB1V39)

ALPHAO(3) = -.330 BETAO (2) = .040

SECTION (1)LEFT VERTICAL DEPENDENT VARIABLE CP

Z/BV	.1580	.3160	.6000	.8400	.9250
X/CV					
.000	.5758	.5262	.3509	.5342	.5600
.025	.0323	-.1109	-.1989	-.1772	-.1896
.050	.2531	.0766	-.1445	-.0281	-.1148
.150	.1441	.0373	.0480	.0930	.0575
.300	-.0010	-.0259	.0649	.0537	.1233
.520	-.0688	-.0612	-.0498	-.0504	-.1130
.685	-.3856	-.6504	-.6224	-.6550	-.6409
.775	-.2885	-.4521	-.6160	-.6389	-.6414
.900		-.3548	-.6052	-.6510	-.6185

ALPHAO(3) = -.340 BETAO (3) = 4.070

SECTION (1)LEFT VERTICAL DEPENDENT VARIABLE CP

Z/BV	.1580	.3160	.6000	.8400	.9250
X/CV					
.000	.5237	.4881	.4610	.3793	.4302
.025	-.1437	-.3493	-.5998	-.7416	-.8079
.050	-.1853	-.3451	-.6357	-.7593	-.8138
.150	.0113	-.1604	-.3042	-.6238	-.6330
.300	-.0918	-.1453	-.2233	-.1989	-.3964
.520	-.1934	-.1939	-.2122	-.1835	-.1441
.685	-.4410	-.6977	-.6330	-.6731	-.6335
.775	-.3228	-.5012	-.6590	-.6604	-.6523
.900		-.4041	-.6411	-.6569	-.6486

ALPHAO(3) = -.340 BETAO (4) = 8.140

SECTION (1)LEFT VERTICAL DEPENDENT VARIABLE CP

Z/BV	.1580	.3160	.6000	.8400	.9250
X/CV					
.000	.4037	.3383	.2817	.2036	.2649
.025	-.2656	-.4782	-.6603	-.7578	-.8405
.050	-.2902	-.4892	-.6663	-.8098	-.8836
.150	-.4472	-.4450	-.6401	-.6533	-.7944
.300	-.0730	-.3833	-.5552	-.5724	-.6703
.520	-.2803	-.3588	-.5387	-.5466	-.4368
.685	-.4858	-.6123	-.7545	-.6659	-.7103
.775	-.2786	-.5139	-.6881	-.5468	-.5168
.900		-.4757	-.5215	-.4773	-.4156

ARC11-716 TA14 S2+T12+S12+R25+AT11 LEFT VERTICAL (RB1V79)

ALPHA(4) = 4.010 BETA(1) = -6.060

SECTION (1) LEFT VERTICAL DEPENDENT VARIABLE CP

Z/BV	.1580	.3160	.6000	.8400	.9250
X/CV					
.000	.3498	.2299	.2279	.2297	.1670
.025	.4425	.4036	.4335	.4[illegible]	[illegible]
.050	[illegible]	.3790	.3910	.4015	[illegible]
.150	.2845	.2945	.2471	.3143	[illegible]
.300	.2[illegible]35	.2224	.2210	.2217	[illegible]
.520	[illegible].171	.0622	.0145	[illegible]	[illegible]
.685	[illegible].151	-.5329	-.5938	-.6051	-.6279
.775	.3092	-.5066	-.5453	-.5722	-.6137
.900		-.3182	-.4[illegible]4	-.5[illegible]	-.6[illegible]

ALPHA(4) = 4.010 BETA(2) = -4.010

SECTION (1) LEFT VERTICAL DEPENDENT VARIABLE CP

Z/BV	.1580	.3160	.6000	.8400	.9250
X/CV					
.000	.4779	.3935	.4016	.3829	.3446
.025	.2912	.1[illegible]	.2429	.2725	.1050
.050	.3172	.2[illegible]	.2353	.2588	.2922
.150	.1904	.1322	.1745	.2[illegible]	.1[illegible]
.300	.0576	.1317	.1291	.1276	.1235
.520	[illegible]	.0927	-.0245	-.0400	-.1[illegible]
.685	-.4437	-.6346	-.6[illegible]	-.6274	-.6626
.775	-.2[illegible]	-.5[illegible]2	-.5[illegible]	-.6120	-.6525
.900		-.53[illegible]	-.5673	-.62[illegible]	-.6523

ALPHA(4) = 4.000 BETA(3) = .050

SECTION (1) LEFT VERTICAL DEPENDENT VARIABLE CP

Z/BV	.1580	.3160	.6000	.8400	.9250
X/CV					
.000	.5299	.4469	.4410	.4085	.4865
.025	-.0331	-.1660	-.2627	-.2360	-.2052
.050	.2029	-.0066	-.2200	-.0787	.1655
.150	.0[illegible]2	-.0282	-.0387	.0519	.0195
.300	-.0567	-.0944	-.0179	.0219	.0919
.520	-.1307	-.1179	-.1181	-.0641	-.1392
.685	-.3891	-.6528	-.6405	-.6373	-.6498
.775	-.2874	-.4339	-.6360	-.6291	-.6468
.900		-.3616	-.6180	-.6396	-.6500

ARC11-716 TA14 O1+T12+S12N25+AT11 LEFT VERTICAL (RB1V39)

ALPHAO(4) = 4.000 BETAO (4) = 4.100

SECTION (1)LEFT VERTICAL DEPENDENT VARIABLE CP

Z/BV	.1580	.3160	.6000	.8400	.9250
X/CV					
.000	.4699	.4141	.3609	.2917	.3410
.025	-.1944	-.3845	-.6216	-.7576	-.8171
.050	-.2283	-.3885	-.6476	-.7804	-.8238
.150	-.0602	-.2215	-.3466	-.6363	-.8611
.300	-.1212	-.1923	-.2661	-.2405	-.3707
.525	-.2492	-.2482	-.2492	-.2333	-.1914
.685	-.4439	-.6256	-.6561	-.6725	-.6465
.775	-.2739	-.4575	-.6816	-.6683	-.6621
.900		-.4159	-.4783	-.5618	-.6676

ALPHAO(4) = 3.990 BETAO (5) = 9.140

SECTION (1)LEFT VERTICAL DEPENDENT VARIABLE CP

Z/BV	.1580	.3160	.6000	.8400	.9250
X/CV					
.000	.3329	.2574	.1965	.1134	.1734
.025	-.3987	-.5144	-.6774	-.7606	-.8302
.050	-.4252	-.5298	-.6874	-.7936	-.8730
.150	-.4887	-.5076	-.5640	-.6924	-.7962
.300	-.1659	-.4505	-.5874	-.6050	-.5713
.525	-.3511	-.4721	-.5655	-.5909	-.4559
.685	-.3035	.5567	-.7283	-.6194	-.5849
.775	-.2692	-.5522	-.6249	-.5147	-.4780
.900		-.4324	-.3337	-.4796	-.4338

ALPHAO(5) = 7.920 BETAO (1) = -8.050

SECTION (1)LEFT VERTICAL DEPENDENT VARIABLE CP

Z/BV	.1580	.3160	.6000	.8400	.9250
X/CV					
.000	.3751	.1929	.1666	.1365	.0680
.025	.3840	.3267	.3576	.3434	.1677
.050	.3492	.2987	.3181	.3204	.3195
.150	.2123	.2156	.2246	.2392	.1856
.300	.0957	.1376	.1628	.1664	.1749
.525	.0068	.0171	-.0345	-.0339	.1805
.685	-.5790	-.6101	-.5953	-.5938	-.6338
.775	-.3451	-.5660	-.5666	-.5856	-.6160
.900		-.3432	-.5136	-.5665	-.6070

[illegible] LEFT VERTICAL [illegible]

ALPHAT [illegible] = 7.350 [illegible] = 3.990

[illegible] LEFT VERTICAL DEPENDENT VARIABLE CP

	.1580	.3160	.6000	.8400	.9250
[illegible]					
[illegible]	.4550	.3235	.3077	.2691	.2417
[illegible]	.2115	.1741	.1704	[illegible]	.0285
[illegible]	.2564	.1514	.1651	[illegible]	.0221
[illegible]	[illegible]	[illegible]	.1963	.1315	[illegible]
[illegible]	[illegible]	.3558	[illegible]	[illegible]	[illegible]
[illegible]	[illegible]	-.0514	-.0884	-.0794	[illegible]
[illegible]	-.4350	-.6614	-.6445	-.6417	-.5750
.775	-.3396	-.5427	-.6341	[illegible]	[illegible]
[illegible]		-.3526	-.6017	-.6368	[illegible]

ALPHAT [illegible] = 7.350 BETAT [illegible] = .040

[illegible] LEFT VERTICAL DEPENDENT VARIABLE CP

	.1580	.3160	[illegible]	[illegible]	.9250
[illegible]					
[illegible]	.4429	.3916	.3624	.3491	[illegible]
.125	-.0943	-.2761	-.2917	-.2621	-.2576
[illegible]	.1524	[illegible]	[illegible]	-.1572	-.2413
[illegible]	[illegible]	[illegible]	[illegible]	[illegible]	-.0544
.350	-.1116	-.1376	-.1742	-.0508	[illegible]
.500	.1867	[illegible]	[illegible]	-.1390	[illegible]
[illegible]	[illegible]	[illegible]	-.6595	-.6591	[illegible]
.775	-.3115	[illegible]	-.6305	-.6546	[illegible]
[illegible]		[illegible]	-.5326	[illegible]	[illegible]

ALPHAT [illegible] = 7.950 BETAT [illegible] = 4.12

[illegible] LEFT VERTICAL DEPENDENT VARIABLE CP

X/BV	.1580	.3160	.6000	.8400	.9250
[illegible]					
[illegible]	.4651	.3721	.2843	.1962	.2415
.125	.1620	-.4094	-.6359	[illegible]	-.8046
[illegible]	-.1733	-.4187	[illegible]	[illegible]	[illegible]
.350	[illegible]	-.2150	-.3456	[illegible]	-.6320
.500	.1643	.2275	-.2931	[illegible]	-.2566
.625	-.3058	-.2974	-.2889	-.2745	-.2543
.675	-.3970	[illegible]	-.6855	-.6796	-.6699
.775	-.2668	-.4518	-.6658	-.6743	-.6737
.900		-.4217	-.4267	-.5640	-.6762

ORIGINAL PAGE IS
OF POOR QUALITY

ARC11-716 I/14 OI+T12+S12N25+AT11 LEFT VERTICAL (RB1V39)

ALPHAO(5) = 7.910 BETAO (5) = 8.200

SECTION (1) LEFT VERTICAL DEPENDENT VARIABLE CP

Z/BV	.1580	.3160	.6000	.8400	.9250
X/CV					
.000	.3542	.2149	.1188	0242	.0775
.025	-.3721	-.5662	-.6934	-.7390	-.7942
.050	-.4227	-.5792	-.7032	-.7625	-.8253
.150	-.1421	-.5697	-.6805	-.7026	-.7460
.300	-.2391	-.4235	-.6032	-.6340	-.6323
.520	-.4437	-.4[illegible]	-.5757	-.6003	-.5267
.685	-.3642	-.4[illegible]	-.6434	-.5372	-.5649
.775	-.2984	-.4427	-.5989	-.5066	-.5247
.900		-.5027	-.5641	-.5019	-.4990

A[illegible]TIE DATA [illegible] LEFT VERTICAL (RB1V40) (15 FEB 74)

REFERENCE DATA

AREF =	2.4210 SQ FT	XMRP =	2.5800 INCHES		
LREF =	39.7090 INCHES	YMRP =	[illegible] INCHES		
BREF =	39.7090 INCHES	ZMRP =	[illegible] INCHES		
SCALE =	[illegible] SCALE				

PARAMETRIC DATA

MACH =	1.400	ELEVON =	.000
RUDDER =	.000	[illegible] =	.000

ALPHAC [illegible] = [illegible] BETAC [illegible] = [illegible]

SECTION LEFT VERTICAL DEPENDENT VARIABLE CF

ZBY	[illegible]	.3160	.6000	.9400	.9250
XBY					
[illegible]	[illegible]	.4815	.5325	.5664	.5061
[illegible]	[illegible]	.7055	.7246	[illegible]	.7148
[illegible]	[illegible]	[illegible]	.6791	[illegible]	[illegible]
[illegible]	.5776	.5586	.5781	.5897	.5241
[illegible]	[illegible]	.4860	[illegible]	[illegible]	.4716
[illegible]	.3602	.3281	.3074	.2924	.1983
[illegible]	[illegible]	-.2761	[illegible]	[illegible]	[illegible]
[illegible]	-.2815	-.2622	-.2433	[illegible]	[illegible]
[illegible]		[illegible]	-.2112	[illegible]	[illegible]

ALPHA [illegible] = [illegible] BETA [illegible] = [illegible]

SECTION LEFT VERTICAL DEPENDENT VARIABLE CP

ZBY	[illegible]	.3160	[illegible]	.9400	.9250
XBY					
[illegible]	.7587	.6421	[illegible]	.7154	[illegible]
[illegible]	[illegible]	.4825	.4685	.5160	[illegible]
[illegible]	[illegible]	.4783	.4736	.5156	[illegible]
[illegible]	.4681	.3918	.4126	.4553	[illegible]
[illegible]	[illegible]	.3182	[illegible]	.3935	.3880
[illegible]	[illegible]	.2507	[illegible]	.2509	.1566
[illegible]	-.2697	-.3277	-.3415	-.3131	.3395
[illegible]	.3192	-.3242	-.2517	-.3002	-.3462
[illegible]		-.2469	-.2861	-.3161	-.3434

ARC11-716 IA14 O1+T12+S12N25+AT11 LEFT VERTICAL (RB1V40)

ALPHAO(1) = -7.900 BETAO (3) = .050

SECTION (1)LEFT VERTICAL DEPENDENT VARIABLE CP

Z/BV	.1580	.3160	.6000	.8400	.9250
X/CV					
.000	.6902	.7241	.7384	.7245	.7536
.025	.2117	.0913	-.0287	-.0664	-.0323
.050	.4097	.1985	.0017	.0606	-.0148
.150	.3445	.2309	.2050	.2501	.2289
.300	.1998	.1581	.1804	.2141	.2880
.520	.0879	.0943	.1127	.1446	.1012
.685	-.3471	-.3899	-.3490	-.3454	-.3387
.775	-.3904	-.3884	-.3497	-.3437	-.3529
.900		-.3732	-.3546	-.3576	-.3404

ALPHA(1) = [illegible] BETA(4) = 4.100

SECTION (1)LEFT VERTICAL DEPENDENT VARIABLE CP

Z/BV	.1580	.3160	.6000	.8400	.9250
X/CV					
.000	.3501	.6648	[illegible]	.6354	.6629
.025	.0231	-.1474	-.4373	-.4683	-.4810
.050	.0174	-.1459	-.4045	-.4544	.4973
.150	.1449	-.0543	[illegible]	-.0273	.3135
.300	.1049	.0257	[illegible]	-.2356	-.1882
.520	-.0052	-.0159	-.0229	-.0290	-.0451
.685	-.4042	-.4289	-.4146	-.4057	-.3508
.775	-.3932	-.4345	-.4082	-.3930	-.3675
.900		-.3929	-.4098	-.4000	[illegible]

ALPHA(1) = -8.000 BETA(5) = 8.190

SECTION (1)LEFT VERTICAL DEPENDENT VARIABLE CP

Z/BV	.1580	.3160	.6000	.8400	.9250
X/CV					
.000	.6198	.5038	.5196	.4517	.5206
.025	-.1501	-.2547	-.3869	-.4860	-.5208
.050	-.1708	.2615	-.3969	-.5341	-.5675
.150	-.3132	-.2603	-.3647	-.4647	-.4855
.300	.0477	-.2567	-.3235	-.3539	-.4028
.520	-.0613	-.2372	-.3260	-.2987	-.2961
.685	-.3768	-.4666	-.5139	-.5263	-.4940
.775	-.2813	-.4440	-.5095	-.5232	-.5118
.900		-.3946	-.4384	-.3685	-.4817

[illegible] 1414 [illegible]+T:2+S:2:1:2:5+AT11 LEFT VERTICAL [illegible]RB1V4C

[illegible] = [illegible]

[illegible] LEFT VERTICAL [illegible] DEPENDENT VARIABLE [illegible]

[illegible]	[illegible]	[illegible]	[illegible]	[illegible]	[illegible]
[illegible]					
[illegible]	[illegible]	[illegible]	.4525	[illegible]	[illegible]
.25	[illegible]	.6236	.6949	[illegible]	.5457
[illegible]	[illegible]	.5945	.6145	[illegible]	.6042
[illegible]	[illegible]	.4896	.5183	[illegible]	.4767
[illegible]	[illegible]	.4294	.4331	[illegible]	.4212
[illegible]	[illegible]	[illegible]	.2948	[illegible]	[illegible]
[illegible]	[illegible]	[illegible]	[illegible]	[illegible]	[illegible]
[illegible]	[illegible]	[illegible]	[illegible]	[illegible]	[illegible]
[illegible]		-.2268	-.2373	[illegible]	.3165

[illegible] = [illegible] [illegible] = [illegible]

[illegible] LEFT VERTICAL DEPENDENT VARIABLE CP

[illegible]	[illegible]	[illegible]	[illegible]	[illegible]	[illegible]
[illegible]					
[illegible]	[illegible]	[illegible]	.6175	.6240	.6015
.25	.5176	.4151	.3924	.4469	.4452
[illegible]	[illegible]	[illegible]	[illegible]	[illegible]	.4349
[illegible]	[illegible]	[illegible]	[illegible]	[illegible]	.3502
[illegible]	.2467	[illegible]	[illegible]	.3250	.3285
[illegible]	.1712	[illegible]	[illegible]	[illegible]	.1564
[illegible]	[illegible]	[illegible]	[illegible]	[illegible]	[illegible]
[illegible]	[illegible]	[illegible]	[illegible]	[illegible]	[illegible]
[illegible]		[illegible]	[illegible]	[illegible]	[illegible]

[illegible] = [illegible] [illegible] = [illegible]

SECTION [illegible] LEFT VERTICAL DEPENDENT VARIABLE CP

[illegible]	[illegible]	[illegible]	[illegible]	[illegible]	[illegible]
[illegible]					
[illegible]	[illegible]	[illegible]	[illegible]	6293	.6546
.025	[illegible]	.0432	[illegible]	[illegible]	[illegible]
.05	[illegible]	[illegible]	[illegible]	[illegible]	[illegible]
[illegible]	[illegible]	[illegible]	.1476	[illegible]	[illegible]
[illegible]	[illegible]	[illegible]	.1792	.1532	[illegible]
[illegible]	[illegible]	[illegible]	[illegible]	[illegible]	[illegible]
.645	[illegible]	-.4052	-.3648	[illegible]	-.3562
[illegible]	[illegible]	-.4047	-.3691	[illegible]	[illegible]
[illegible]		[illegible]	-.3717	[illegible]	-.3616

ARC11-716 IA14 OL+T12+S12N25+AT11 LEFT VERTICAL (RB:V40)

ALPHAC (2) = -3.040 BETAC (4) = 4.100

SECTION (1) LEFT VERTICAL DEPENDENT VARIABLE CP

X/CV \ Z/BV	.1580	.3160	.6000	.8400	.9250
.000	.6907	.5988	.6019	.5504	.5964
.025	-.0457	-.1794	-.4464	-.4551	-.4705
.050	[illegible]	-.1852	-.4135	-.4443	-.4745
.150	.0974	-.0817	-.2421	-.3537	-.3533
.500	.1704	-.0141	-.0249	-.2400	-.1886
.520	[illegible]	-.0602	-.0587	-.0394	-.0345
.675	-.3909	-.4505	-.4234	-.3993	-.3591
.775	-.2649	-.4597	-.4240	-.3906	-.3810
.900		-.361[illegible]	-.4311	-.3996	-.3871

ALPHA[illegible] 2) = [illegible].957 BETAC (5) = 8.150

SECTION (1) LEFT VERTICAL DEPENDENT VARIABLE CP

X/CV \ Z/BV	.1580	.3160	.6000	.8400	.9250
.000	.5646	.4158	[illegible]	.3523	.4203
.025	-.2178	-.2778	-.4325	-.4865	-.5311
.050	-.2344	-.2[illegible]	[illegible]	-.5315	-.5668
.150	-.3780	-.2[illegible]	.3419	-.4625	-.[illegible]026
.500	.0182	-.2[illegible]	-.3485	-.3768	-.4149
.520	-.1023	-.2[illegible]3	-.3459	-.3301	-.3[illegible]
.675	-.4077	-.4855	-.5245	-.5347	-.5[illegible]
.775	-.3196	-.4664	-.5201	-.5289	-.5213
.900		-.4132	-.4652	-.3768	-.496[illegible]

ALPHA[illegible] 3) = [illegible].370 BETAC (1) = -8.090

SECTION (1) LEFT VERTICAL DEPENDENT VARIABLE CP

X/CV \ Z/BV	.1580	.3160	.6000	.8400	.9250
.000	.5240	.5473	.5805	.5847	.5193
.025	.6621	.5858	.5[illegible]	.5876	.5875
.050	.6185	.5475	.5550	.5542	.5473
.150	.4656	.4250	.4629	.4838	.4256
.500	.3223	.3785	.3860	.4015	.5904
.520	.2913	.2832	.2116	.2258	.1230
.675	-.2418	-.2989	-.3065	-.2882	-.3313
.775	-.3053	-.2876	.2768	-.2903	-.3290
.900		-.2479	-.2488	-.2920	-.3184

[illegible] JAN 75 [illegible] MEASURED PRESSURE DATA [illegible] A14A - VALID 7

APRIL 75 (A14 [illegible]12*312N25-A715 LEFT VERTICAL (RP1V4D)

ALPHAC = -.380 BETAC (2) = -4.020

SECTION 13 LEFT VERTICAL DEPENDENT VARIABLE CP

Z/CV	.1580	.3160	.5000	.8400	.9250
Y/CV					
[illegible]	.8309	[illegible]	.5438	.5502	[illegible]
.025	.4515	.3627	.3553	.3964	[illegible]
.050	.4560	.3613	.3472	.3835	[illegible]
.150	.3445	.2627	[illegible]	.3436	[illegible]
.300	.1556	.1984	.2605	.2767	.2930
.520	[illegible]	.1400	.1595	.1685	[illegible]
.685	-.5174	-.3677	-.3483	.3423	-.3654
.775	-.2989	-.3672	-.3412	-.3339	-.3751
.900		-.3466	-.3320	-.3478	-.3751

ALPHAC (3) = -.380 BETAC (3) = .020

SECTION 14 LEFT VERTICAL DEPENDENT VARIABLE CP

Z/CV	.1580	.3160	.6000	.8400	.9250
Y/CV					
.000	.6548	.5997	.5669	.5482	.5734
.025	.0994	.0074	-.0915	-.1551	[illegible]
.050	.1634	[illegible]	.0668	-.0731	[illegible]
.150	.2438	.1418	.1103	.1411	.1248
.300	.1115	.0675	.0633	.1041	.1610
.520	.0172	.0126	.0306	.0628	.0303
.685	-.5886	-.4178	-.3757	-.3880	-.3772
.775	-.2787	-.4178	-.3930	-.3469	-.3866
.900		-.3699	-.3993	-.4007	-.3795

ALPHAC (3) = -.380 BETAC (4) = 4.020

SECTION 14 LEFT VERTICAL DEPENDENT VARIABLE CP

Z/CV	.1580	.3160	.6000	.8400	.9250
Y/CV					
.000	.5476	.5388	.5511	.4729	.5198
.025	.757	-.2209	.4248	-.4657	.4947
.050	-.1174	-.2214	-.4266	-.4607	.4965
.150	.0967	-.1044	-.2494	-.3585	.3649
.300	.0352	-.0549	-.0567	.2563	[illegible]
.520	-.0743	-.0843	.0843	-.0679	.0364
.685	.3357	.4695	-.4367	-.4115	.3747
.775	.2482	-.4607	-.4395	-.4088	-.3962
.900		-.3482	-.4459	-.4175	-.4028

DATE 06 JAN 75 TABULATED PRESSURE DATA - IA14A - VOL. I

ARC1-716 IA14 O1+T12+S12N25+AT11 LEFT VERTICAL (RB1V40)

ALPHAO(5) = -.390 BETAO (5) = 8.140

SECTION (1)LEFT VERTICAL DEPENDENT VARIABLE CP

X/CV \ Z/BV	.1580	.3160	.6000	.8400	.9250
.000	.5335	.3823	.3763	.2770	.3497
.025	-.2609	-.3080	-.4118	-.4863	-.5333
.050	-.2770	-.3161	-.4207	-.5260	-.5750
.150	-.3526	-.3101	-.3971	-.4831	-.5133
.300	.0202	-.3140	-.3643	-.3924	-.4306
.520	.1342	-.2891	-.3576	-.3527	-.2503
.685	-.3821	-.4887	-.5275	-.5326	-.5186
.775	-.2642	-.4385	-.5221	-.5235	-.5265
.900		-.3954	-.4441	-.3773	-.4583

ALPHAO(4) = 4.080 BETAO (1) = -8.060

SECTION (1)LEFT VERTICAL DEPENDENT VARIABLE CP

X/CV \ Z/BV	.1580	.3160	.6000	.8400	.9250
.000	.4798	.3148	.3269	.3020	.2499
.025	.5575	.4835	.5122	.5125	.5171
.050	.5091	.4396	.4762	.4769	.4797
.150	.3518	.3303	.3971	.4242	.3703
.300	.2201	.2861	.3375	.3391	.3246
.520	.2213	.2236	.1720	.1888	.0747
.685	-.3011	.3224	-.3214	-.2936	-.3415
.775	-.3109	.3178	-.2965	-.3063	-.3380
.900		.2950	-.2729	-.3043	-.3302

ALPHAO(4) = 4.080 BETAO (2) = -4.020

SECTION (1)LEFT VERTICAL DEPENDENT VARIABLE CP

X/CV \ Z/BV	.1580	.3160	.6000	.8400	.9250
.000	.5754	.4337	.4618	.4298	.4144
.025	.4200	.3037	.2621	.3202	.3235
.050	.4138	.2980	.2659	.3114	.3187
.150	.3008	.2048	.2230	.2802	.2441
.300	.1496	.1304	.1960	.2192	.2286
.320	.0842	.1004	.1097	.1249	.0443
.685	-.3726	-.3601	-.3673	-.3484	-.3777
.775	-.3020	-.3641	-.3624	-.3512	-.3848
.900		-.3553	-.3517	-.3609	-.3873

ORIGINAL PAGE IS OF POOR QUALITY

AR-11-716 IA14 O1+T12+S12N25+AT11 LEFT VERTICAL (RB1V40)

ALPHAO(3) = 4.010 BETAO (3) = .030

SECTION (1)LEFT VERTICAL DEPENDENT VARIABLE CP

X/CV \ Z/BV	.1580	.3160	.6000	.8400	.9250
.000	.5985	.5118	.4965	.4505	.4687
.025	-.0114	-.0387	-.1303	-.1240	-.1236
.050	.1693	-.0259	-.1280	-.1172	-.1146
.150	.1814	.0854	.0541	.0888	.0795
.300	.0558	.0165	.0375	.0630	.1169
.520	-.0350	-.0269	-.0128	.0288	-.0124
.685	-.1760	-.4364	-.3945	-.3828	-.3913
.775	-.2635	-.4296	-.4039	-.3860	-.4045
.900		-.3217	-.4054	-.3965	-.4025

ALPHAO(4) = 4.040 BETAO (4) = 4.090

SECTION (1)LEFT VERTICAL DEPENDENT VARIABLE CP

X/CV \ Z/BV	.1580	.3160	.6000	.8400	.9250
.000	.3935	.4582	.4450	.3811	.4266
.025	-.0632	-.2414	-.4562	-.4637	-.4362
.050	-.0780	-.2532	-.4447	-.4696	-.4969
.150	-.0551	-.1423	-.2506	-.3760	-.3027
.300	.0004	-.0903	-.1037	-.2608	-.2455
.520	-.1100	-.0770	-.1278	-.1065	-.0751
.685	-.3452	-.4094	-.4416	-.4134	-.3929
.775	-.2559	-.3939	-.4583	-.4191	-.4146
.900		-.3257	-.4629	-.4275	-.4209

ALPHAO(4) = 4.060 BETAO (5) = 8.160

SECTION (1)LEFT VERTICAL DEPENDENT VARIABLE CP

X/CV \ Z/BV	.1580	.3160	.6000	.8400	.9250
.000	.4768	.3316	.3171	.2060	.2605
.025	-.3036	-.3742	-.4581	-.4958	-.5278
.050	-.3218	-.3812	-.4435	-.5321	-.5711
.150	-.4013	-.3712	-.4195	-.5139	-.5227
.300	-.0463	-.3574	-.3840	-.4244	-.4167
.520	-.2105	-.3068	-.3771	-.3781	-.2596
.685	-.2757	-.4768	-.5345	-.5338	-.5245
.775	-.2501	-.3863	-.5135	-.4896	-.5136
.900		-.3830	-.4298	-.3763	-.3948

ORIGINAL PAGE IS
OF POOR QUALITY

DATE 06 JAN 75 TABULATED PRESSURE DATA - IA14A - VOL. 7

ARC11-716 IA14 OL+T12+S12N25+AT11 LEFT VERTICAL (RB1V40)

ALPHAO(5) = 8.000 BETAO (1) = -8.060

SECTION (1)LEFT VERTICAL DEPENDENT VARIABLE CP

Z/BV	.1580	.3160	.6000	.8400	.9250
X/CV					
.000	.4217	.2637	.2750	.2360	.1867
.025	.4509	.4280	.4485	.4512	.4616
.050	.4341	.3836	.4175	.4226	.4240
.150	.2510	.2624	.3381	.3709	.3219
.300	.0790	.2159	.2851	.2872	.2824
.520	.1137	.1655	.1382	.1532	.0409
.685	-.3745	-.3344	-.3372	-.3070	-.3568
.775	-.3381	-.3344	-.3140	-.3230	-.3571
.900		-.3404	-.2914	-.3162	-.3492

ALPHAO(5) = 7.960 BETAO (2) = -4.010

SECTION (1)LEFT VERTICAL DEPENDENT VARIABLE CP

Z/BV	.1580	.3160	.6000	.8400	.9250
X/CV					
.000	.6126	.4115	.3710	.3459	.3200
.025	.3071	.2565	.1975	.2596	.2606
.050	.3483	.2743	.2043	.2478	.2546
.150	.2358	.1620	.1606	.2173	.1861
.300	.0877	.0839	.1381	.1639	.1710
.520	.0338	.0449	.0765	.0761	.0031
.685	-.4065	-.3698	-.3740	-.3643	-.3931
.775	-.3321	-.3861	-.3689	-.3756	-.4040
.900		-.3849	-.3592	-.3791	-.4058

ALPHAO(5) = 7.910 BETAO (3) = .030

SECTION (1)LEFT VERTICAL DEPENDENT VARIABLE CP

Z/BV	.1580	.3160	6000	.8400	.9250
X/CV					
.000	.5862	.4628	.4047	.3655	.3787
.025	-.0483	-.0598	-.1431	-.1275	-.1400
.050	.0261	-.0535	-.1550	-.1408	-.1346
.150	.1706	.0507	.0099	.0520	.0352
.300	.0238	-.0214	-.0035	.0225	.0950
.520	-.0802	-.0741	-.0549	-.0053	-.0535
.685	-.3830	-.4445	-.4132	-.3862	-.4064
.775	-.2695	-.4317	-.4221	-.3973	-.4251
.900		-.3077	-.4150	-.4048	-.4241

A2C1-716 TA14 O1+T12+S12+Z5+A711 LEFT VERTICAL (RB1V40)

ALPHA(0) = 8.000 BETA(0) = 8.210

SECTION 11 LEFT VERTICAL DEPENDENT VARIABLE CP

Z/BV	.1580	.3160	.6000	.8400	.9250
X/CV					
.000	.4329	.2905	.2525	.1339	.1901
.025	-.2279	-.3593	-.4471	-.4846	-.5123
.050	-.2747	-.3694	-.4572	-.5195	-.5563
.150	-.0862	-.3636	-.4372	-.5150	-.5111
.300	-.1833	-.3370	-.3995	-.4214	-.4394
.520	-.2787	-.2458	-.3834	-.4125	.3187
.685	-.5330	-.3846	-.5142	-.5272	-.5063
.775	-.2601	-.3339	-.4699	-.4354	-.4586
.900		-.2637	-.4300	-.3776	-.3769

ORIGINAL PAGE IS
OF POOR QUALITY

ARC11-716 IA14 O4+T12+S12N25 LEFT VERTICAL (PB1V41) (15 FEB 74)

REFERENCE DATA

SREF =	2.4210	SQ.FT.	XMRP =	29.5800	INCHES
LREF =	38.7090	INCHES	YMRP =	.0000	INCHES
BREF =	38.7090	INCHES	ZMRP =	.0000	INCHES
SCALE =	.0300	SCALE			

PARAMETRIC DATA

MACH =	.600	ELEVON =	.000
RUDDER =	.000	SPDBRK =	.000

ALPHAO(1) = -7.940 BETAO (1) = .020

SECTION (1)LEFT VERTICAL DEPENDENT VARIABLE CP

Z/BV	.1580	.3160	.6000	.8400	.9250
X/CV					
.000	.4535	.4822	.5510	.5456	.5581
.025	-.1427	-.2961	-.3391	-.2199	-.4910
.050	.0470	-.0250	-.0521	-.0835	-.0914
.150	.0070	-.0386	-.0746	-.0601	-.0915
.300	-.0698	-.1029	-.4026	-.1262	-.1156
.525	-.2393	-.2756	-.3582	-.3699	-.2848
.685	-.2353	-.3772	-.3927	-.4582	-.3358
.775	-.1846	-.2227	-.2147	-.2019	-.1444
.900		-.1343	-.0854	-.0484	-.0229

ALPHAO(1) = -7.950 BETAO (2) = 4.080

SECTION (1)LEFT VERTICAL DEPENDENT VARIABLE CP

Z/BV	.1580	.3160	.6000	.8400	.9250
X/CV					
.000	.2964	.2079	.2693	.1729	.2939
.025	-.5101	-.6105	-.6285	-.8115	-.8164
.050	-.5558	-.4631	-.5568	-.7286	-.7977
.150	-.1932	-.3661	-.4546	-.5092	-.6393
.300	-.2039	-.2755	-.4368	-.3397	-.3459
.525	-.3099	-.3174	-.4324	-.4012	-.3105
.685	-.2598	-.4844	-.4437	-.4241	-.3205
.775	-.2175	-.2714	-.2477	-.2158	-.1789
.900		-.1572	-.1016	-.0770	-.0643

AR211-716 TA14 [illegible] LEFT VERTICAL (RB1 [illegible])

ALPHA ([illegible]) = [illegible] BETAO (3) = [illegible]

SECTION 11 LEFT VERTICAL DEPENDENT VARIABLE CP

Z/BV	.1580	.3160	.6000	.8400	.9250
X/CV					
.000	-.0671	.3705	-.2792	-.2773	[illegible]
.025	-.3155	.8795	-1.0230	-.7608	-.5358
.050	-.5569	-.8262	-.9885	-.7514	-.6400
.150	-1.0494	-.7635	-.9451	-.6[illegible]3	.5727
.350	-.2[illegible]4	-.6616	-.8408	-.[illegible]281	.5388
.525	-.[illegible]	-.4317	-.6028	-.4825	-.4164
.695	-.[illegible]05	-.4317	-.4749	.3831	-.3228
.775	-.2440	-.3091	-.3586	-.3430	-.2766
.900		-.2054	-.2236	-.2815	-.23[illegible]

ALPHA([illegible]) = -4.050 BETAO (1) = -8.030

SECTION (1) LEFT VERTICAL DEPENDENT VARIABLE CP

Z/BV	.1580	.3160	.6000	.8400	.9250
X/CV					
.000	.1436	-.3693	-.3356	-.1018	-.0858
.025	.4401	.4354	.4642	.4456	.3616
.050	.3375	.3775	.4204	.3919	.3466
.150	.2438	.2487	.2550	.2572	.1615
.350	.1331	.1164	-.1211	.0888	.0343
.525	-.1146	-.1507	-.1[illegible]6	-.2320	-.1747
.695	-.2[illegible]0	-.2666	-.2752	-.3141	-.27[illegible]
.775	-.1754	-.1789	-.1665	-.1954	-.1969
.900		-.1395	-.1[illegible]35	-.1379	-.1641

ALPHA(2) = -4.050 BETA(2) = 4.02[illegible]

SECTION (1) LEFT VERTICAL DEPENDENT VARIABLE CP

Z/BV	.1580	.3160	.6000	.8400	.9250
X/CV					
.000	.2347	.1739	.2379	.3316	.2659
.025	.2474	.2381	.2571	.2539	.1290
.050	.2260	.2106	.2385	.2[illegible]36	.2112
.150	.1229	.1066	.1066	.11[illegible]3	.0595
.300	.0204	.0029	-.3002	.0046	-.0206
.520	-.1453	-.2194	-.2648	-.2803	-.2215
.645	.2355	-.3135	-.3490	-.3523	-.2817
.775	-.1731	-.2031	-.1894	-.1680	-.1425
.900		-.1393	-.0851	-.0504	-.0604

DATE 08 JAN 75 TABULATED PRESSURE DATA - IA14A - VOL. 7

ARC11-716 IA14 01+T12+S12N25 LEFT VERTICAL (B1V41)

ALPHA(2) = -4.050 BETA(3) = .030

SECTION (1) LEFT VERTICAL DEPENDENT VARIABLE CP

X/CV \ Z/BV	.1580	.3160	.6000	.8400	.9250
.000	.4527	.4277	.4911	.4764	.4922
.025	-.2339	-.3143	-.3389	-.2161	-.4901
.050	.0090	-.0563	-.0616	-.1015	-.1146
.150	-.0308	-.0724	-.09[illegible]	-.1062	-.1103
.300	-.1055	-.1221	-.4075	-.1373	-.1281
.520	-.2526	-.2795	-.3522	-.3543	-.2762
.685	-.2377	-.3825	-.3774	-.4180	-.3150
.775	-.1994	-.2257	.2196	-.1917	-.1364
.900		-.1345	-.0882	-.0420	-.0096

ALPHA(2) = -3.950 BETA(4) = 4.070

SECTION (1) LEFT VERTICAL DEPENDENT VARIABLE CP

X/CV \ Z/BV	.1580	.3160	.6000	.8400	.9250
.000	.2409	.1568	.2058	.0998	.2134
.025	.5793	-.6227	-.6174	.7497	-.8358
.050	-.6117	-.5120	-.5557	.6813	-.8106
.150	-.2422	-.4085	-.4666	-.5195	-.6435
.300	.2349	-.2978	-.4501	-.3572	-.3339
.520	-.3141	.3266	-.4265	-.3873	.2061
.685	-.2648	-.4301	-.4303	-.4111	-.3026
.775	-.2237	-.2680	-.2499	-.2172	-.1708
.900		-.1590	-.1075	-.0762	-.0615

ALPHA(2) = -3.950 BETA(5) = 8.110

SECTION (1) LEFT VERTICAL DEPENDENT VARIABLE CP

X/CV \ Z/BV	.1580	.3160	.6000	.8400	.9250
.000	-.1275	-.3970	-.5653	-.4181	-.1045
.025	-.3668	-.9114	-.9873	-.8464	-.6374
.050	-1.0020	-.8694	-.9540	-.8251	-.6670
.150	-1.0680	-.7979	-.9198	-.7620	-.6003
.300	-.2768	-.7028	-.8424	-.6777	-.5369
.520	-.3577	-.4200	-.6169	-.4918	-.3937
.685	-.2631	-.4404	-.4761	-.4091	-.3309
.775	-.2355	-.3032	-.3409	-.3396	-.29[illegible]
.900		-.2031	-.2045	-.2552	-.2441

[illegible] 716 [illegible] 0[illegible]+712+5[illegible]025 LEFT VERTICAL (PB1V41)

ALPHA(3) = [illegible] BETA(1) = -9.04

SECTION (1) LEFT VERTICAL DEPENDENT VARIABLE CP

Z/H	.1500	.3150	.6000	.8400	.9250
X/C					
.000	-.1882	.4236	-.4121	-.1957	.1807
.025	.4217	.4043	.4297	.4138	.3408
.050	.3662	.3482	.3994	.3657	.3148
.150	.2377	.2219	.2712	.2463	.1406
.300	[illegible]	.0974	-.1395	.3784	.0224
.525	-.1167	-.1641	-.1746	-.2187	-.1715
.675	.2424	-.2603	-.2665	-.2890	-.2055
.775	.1751	-.1749	-.1678	-.1816	-.1905
.900		-.1428	-.0999	-.1251	-.1738

ALPHA(3) = .520 BETA(2) = -4.020

SECTION (1) LEFT VERTICAL DEPENDENT VARIABLE CP

Z/H	.1500	.3150	.6000	.8400	.9250
X/C					
.000	.1940	.1770	.1936	.2593	.2016
.025	.2093	.2006	.2346	.2371	.1142
.050	.1925	[illegible]	.2122	[illegible]	[illegible]
.150	.0514	[illegible]	[illegible]	.1715	.0397
.300	.0410	.0128	-.2665	[illegible]	-.0364
.525	-.1127	.0206	[illegible]	[illegible]	[illegible]
.675	.2361	.2168	[illegible]	.3428	[illegible]
.775	[illegible]	.2026	[illegible]	[illegible]	[illegible]
.900		-.1378	[illegible]	[illegible]	[illegible]

ALPHA(3) = .520 BETA(3) = [illegible]

SECTION (1) LEFT VERTICAL DEPENDENT VARIABLE CP

Z/H	.1500	.3150	.6000	.8400	.9250
X/C					
.000	.3587	.3823	[illegible]	.3224	.4298
.025	-.2827	-.3571	-.3391	-.2215	-.4812
.050	-.0308	-.0402	-.0875	-.1117	-.1386
.150	-.0433	[illegible]	-.1087	-.1013	-.1166
.300	-.1221	-.1391	-.4206	-.1409	[illegible]
.525	-.2547	-.2816	-.3474	-.3511	[illegible]
.675	-.2298	-.3845	-.3669	-.3993	-.3495
.775	-.1915	-.2298	-.1105	-.1840	-.1269
.900		-.1494	-.0913	-.0448	-.0156

APC11-716 IA14 C1+T12+S12N25 LEFT VERTICAL (RB1V41)

ALPHAC(3) = -.330 BETAC (4) = 4.060

SECTION (1)LEFT VERTICAL DEPENDENT VARIABLE CP

Z/BV	.1580	.3160	.6000	.8400	.9250
X/CV					
.000	.1843	.0882	.1211	.0052	.1084
.025	-.6183	-.6374	-.6209	-.6849	-.8750
.050	-.6553	-.5470	-.5654	-.6334	-.8435
.150	-.2843	-.4856	-.4883	-.5248	-.6722
.300	-.2596	-.3007	-.4912	.3990	-.3232
.520	-.3150	-.3204	-.4285	-.3725	-.2659
.685	-.2570	.4187	-.3995	-.3802	-.2683
.775	-.2174	-.2605	-.2364	-.2139	-.1477
.900		-.1634	-.1058	-.0756	-.0552

ALPHAC(3) = -.330 BETAC (5) = 8.140

SECTION (1) LEFT VERTICAL DEPENDENT VARIABLE CP

Z/BV	.1580	.3160	.6000	.8400	.9250
X/CV					
.000	-.1858	.5145	-.4658	.4877	-.1578
.025	-1.0200	-.9472	-.9511	-.7980	-.5809
.050	-1.0750	-.9239	-.9436	-.7852	-.5931
.150	-1.1250	-.8908	-.9110	-.7213	-.5476
.300	.2987	-.7744	-.8623	-.6493	-.4834
.520	-.3605	-.4041	-.6312	-.4979	-.3632
.685	-.2574	-.4188	-.4762	-.4310	-.3225
.775	-.2306	-.2880	-.3510	-.3665	-.2928
.900		-.1984	-.2056	-.2966	-.2346

ALPHAC(4) = 4.130 BETAC (1) = -8.050

SECTION (1)LEFT VERTICAL DEPENDENT VARIABLE CP

Z/BV	.1580	.3160	.6000	.8400	.9250
X/CV					
.000	-.2829	-.5236	-.5376	-.3162	-.2764
.025	.3943	.3810	.3935	.3781	.3159
.050	.3454	.3345	.3892	.3390	.2804
.150	.2274	.2138	.2196	.2511	.1205
.300	.1003	.0898	-.1136	.0716	-.0078
.520	-.1252	-.1612	-.1801	-.2080	-.1615
.685	-.2445	-.2557	-.2573	-.2678	-.2517
.775	-.1650	-.1777	-.1487	-.1731	-.1936
.900		-.1460	-.0960	-.1255	-.1544

[illegible] LEFT VERTICAL [illegible]

ALPHA 4.150 [illegible] 2.[illegible] 4

SECTION 1 LEFT VERTICAL DEPENDENT VARIABLE CP

RX	[illegible]	.3160	.6000	.8400	[illegible]
[illegible]					
[illegible]	[illegible]	.0635	[illegible]	[illegible]	.1158
[illegible]	[illegible]	[illegible]	[illegible]	[illegible]	[illegible]
[illegible]	[illegible]	.1657	[illegible]	[illegible]	.1356
[illegible]	[illegible]	.0786	[illegible]	[illegible]	[illegible]
[illegible]	[illegible]	-.0147	-.2481	-.0192	[illegible]
[illegible]	[illegible]	-.2113	-.2529	-.2443	[illegible]
[illegible]	-.2522	-.3102	[illegible]	[illegible]	[illegible]
.775	[illegible]	-.1956	[illegible]	[illegible]	[illegible]
.900		-.1375	-.0775	[illegible]	[illegible]

ALPHA [illegible] = 4.150 BETA [illegible] = .060

SECTION 1 LEFT VERTICAL DEPENDENT VARIABLE CP

RX	.1580	.3160	.6000	.8400	[illegible]
[illegible]					
[illegible]	.3214	.3580	[illegible]	.3654	[illegible]
[illegible]	.5080	-.3504	-.3214	[illegible]	[illegible]
[illegible]	[illegible]	[illegible]	[illegible]	[illegible]	-.1459
.150	[illegible]	[illegible]	[illegible]	[illegible]	.1151
[illegible]	-.1353	-.1401	-.1353	-.1376	-.1363
[illegible]	[illegible]	[illegible]	-.2552	[illegible]	-.2463
[illegible]	-.2177	[illegible]	-.3473	[illegible]	-.2724
.775	-.1777	-.2227	[illegible]	[illegible]	[illegible]
.900		-.1431	[illegible]	-.0395	-.0152

ALPHA 4 = 4.1[illegible] BETA 4 = 4.080

SECTION 1 LEFT VERTICAL DEPENDENT VARIABLE CP

RX	.1580	.3160	.6000	.8400	[illegible]
[illegible]					
[illegible]	.1445	.0508	.0615	-.0548	.0236
[illegible]	-.6265	-.5142	-.6188	-.6162	-.8764
[illegible]	.5528	-.5413	-.5591	-.5623	[illegible]
[illegible]	-.3462	-.3923	[illegible]	[illegible]	[illegible]
[illegible]	-.2667	.2885	[illegible]	[illegible]	[illegible]
[illegible]	-.2885	-.3000	-.3932	-.3568	[illegible]
.675	-.2234	-.3312	-.3695	-.3574	.2412
.775	-.1956	-.2418	-.2231	-.1966	[illegible]
.900		[illegible]	-.1015	-.0675	[illegible]

A[illegible]C11-716 [illegible]A14 D1+T12+S12N25 LEFT VERTICAL [illegible]B1V41)

ALPHAO(4) = 4.110 BETAO (4) = 3.150

SECTION (1)LEFT VERTICAL DEPENDENT VARIABLE CP

Z/BV	.1580	.3160	.6000	.8400	.9250
X/CV					
.000	-.2362	-.5497	-.5446	-.5554	-.2211
.025	-.0360	-.9204	-.9414	-.7560	-.5477
.050	-1.[illegible]86	.9204	-.9235	-.7463	-.5424
.150	-1.16[illegible]	-.8954	-.9369	-.6966	-.5052
.500	-.5047	-.[illegible]	-.8722	-.6370	-.4357
.520	.3449	.3647	.[illegible]524	-.4975	-.3519
.685	-.2[illegible]	.3970	-.4239	-.4205	-.3128
.775	-.2[illegible]34	-.2463	-.2877	-.3576	-.2752
.900		-.1955	-.1607	-.2841	-.2322

ALPHAO(5) = 7.990 BETAO (1) = -8.000

SECTION (1)LEFT VERTICAL DEPENDENT VARIABLE CP

Z/BV	.1580	.3160	.6000	.8400	.9250
X/CV					
.000	.2792	-.5912	-.5774	.4017	-.3678
.025	.3751	.3512	.3570	.3418	.2757
.050	.3268	.3123	.3597	.3088	.2523
.150	.2085	.2011	.2010	.2201	.1051
.500	.1025	.0853	-.1239	.0615	-.0209
.520	-.1139	-.1473	-.1722	-.1867	-.1519
.685	-.2345	-.2532	-.2504	-.2944	-.2344
.775	-.1689	-.1775	-.1435	-.1594	-.1758
.900		-.1614	-.0990	-.1167	-.1484

ALPHAO(5) = 8.000 BETAO (2) = -4.010

SECTION (1)LEFT VERTICAL DEPENDENT VARIABLE CP

Z/BV	.1580	.3160	.6000	.8400	.9250
X/CV					
.000	.1588	.0256	.0559	.1013	.0595
.025	.1662	.1860	.2090	.2088	.1032
.050	.1498	.1501	.1852	.1785	.1580
.150	.0659	.0685	.0715	.0960	.0192
.500	-.0121	-.0161	-.2250	-.0216	-.0530
.520	-.1759	-.1983	-.2408	-.2228	-.1961
.685	-.2288	-.3046	-.2965	-.2765	-.2360
.775	-.1944	-.2035	-.1572	-.1403	-.1362
.900		-.1469	-.0818	-.0400	-.0451

ORIGINAL PAGE IS
OF POOR QUALITY

[illegible] LEFT VERTICAL [illegible]

[illegible]

[illegible]	[illegible]	[illegible]	[illegible]	[illegible]	[illegible]
[illegible]	[illegible]	[illegible]	[illegible]	[illegible]	[illegible]
[illegible]	[illegible]	[illegible]	[illegible]	[illegible]	[illegible]
[illegible]	[illegible]	[illegible]	[illegible]	[illegible]	[illegible]
[illegible]	[illegible]	[illegible]	[illegible]	[illegible]	[illegible]
[illegible]	[illegible]	[illegible]	[illegible]	[illegible]	[illegible]
[illegible]	[illegible]	[illegible]	[illegible]	[illegible]	[illegible]
[illegible]	[illegible]	[illegible]	[illegible]	[illegible]	[illegible]
[illegible]	[illegible]	[illegible]	[illegible]	[illegible]	[illegible]
[illegible]	[illegible]	[illegible]	[illegible]	[illegible]	[illegible]
[illegible]	[illegible]	[illegible]	[illegible]	[illegible]	[illegible]

[illegible] LEFT VERTICAL [illegible]

[illegible]	[illegible]	[illegible]	[illegible]	[illegible]	[illegible]
[illegible]	[illegible]	[illegible]	[illegible]	[illegible]	[illegible]
[illegible]	[illegible]	[illegible]	[illegible]	[illegible]	[illegible]
[illegible]	[illegible]	[illegible]	[illegible]	[illegible]	[illegible]
[illegible]	[illegible]	[illegible]	[illegible]	[illegible]	[illegible]
[illegible]	[illegible]	[illegible]	[illegible]	[illegible]	[illegible]
[illegible]	[illegible]	[illegible]	[illegible]	[illegible]	[illegible]
[illegible]	[illegible]	[illegible]	[illegible]	[illegible]	[illegible]
[illegible]	[illegible]	[illegible]	[illegible]	[illegible]	[illegible]
[illegible]	[illegible]	[illegible]	[illegible]	[illegible]	[illegible]
[illegible]	[illegible]	[illegible]	[illegible]	[illegible]	[illegible]

[illegible]

AFC11-715 IA14 S4+T12+S12N25 LEFT VERTICAL [illegible]42 [illegible] 18 FEB 74)

REFERENCE DATA

SREF =	2.4210 SQ.FT.	XMRP =	29.5800 INCHES		
LREF =	38.7090 INCHES	YMRP =	.0000 INCHES		
BREF =	38.7090 INCHES	ZMRP =	.0000 INCHES		
SCALE =	.0300 SCALE				

PARAMETRIC DATA

MACH =	.750	ELEVON =	.000
RUDDER =	.000	SPOBRK =	.000

ALPHAO(1) = [illegible] BETAO (1) = -8.000

SECTION (1) LEFT VERTICAL DEPENDENT VARIABLE CP

Z/BV	.1580	.3160	.6000	.8400	.9250
X/CV					
.000	.0458	-.1838	-.0820	.1750	.1171
.025	.5019	.4923	.5094	.4581	.3413
.050	.4505	.4348	.4083	.4013	.3541
.150	.3177	.2963	.2981	.2591	.1636
.300	.1835	.1493	-.1209	.0923	.0340
.520	-.[illegible]72	-.1845	-.2743	-.2983	-.2323
.685	-.2601	-.3262	-.3453	-.3999	-.3830
.775	-.2006	-.2072	-.2247	-.2332	-.2489
.900		-.1736	-.1722	-.2177	-.2110

ALPHAO(1) = [illegible] BETAO (2) = -3.990

SECTION (1) LEFT VERTICAL DEPENDENT VARIABLE CF

Z/BV	.1580	.3160	.6000	.8400	.9250
X/CV					
.000	.5213	.2551	.3370	.4120	.3528
.025	.3024	.2815	.2929	.2700	.1274
.050	.2871	.2566	.2768	.2388	.2045
.150	.1767	.1517	.1370	.1178	.0740
.300	.0644	.0379	-.0034	-.0111	-.0175
.520	-.1599	-.2162	-.2708	-.3403	-.2505
.685	-.2542	-.3702	-.4243	-.6236	-.3490
.775	-.1897	-.2276	-.2153	-.2469	-.1551
.900		-.1603	-.0945	-.0803	-.0703

LEFT VERTICAL

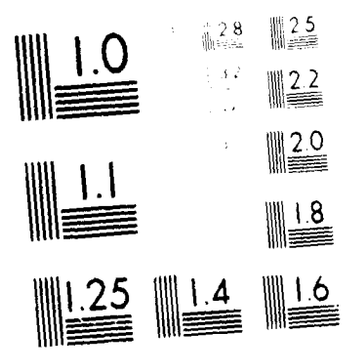
1.0
2.8
2.5
2.2
2.0
1.1
1.8
1.25
1.4
1.6

ARC11-716 IA14 O1+T12+S12N25 LEFT VERTICAL (RB1V42)

ALPHAO(2) = -4.020 BETAO (1) = -8.060

SECTION (1)LEFT VERTICAL DEPENDENT VARIABLE CP

Z/BV	.1580	.3160	.6000	.8400	.9250
X/CV					
.000	.0078	-.2172	-.1639	.0773	.0370
.025	.4529	.4324	.4578	.4166	.3046
.050	.4060	.3829	.4112	.3635	.3106
.150	.2694	.2520	.2471	.2327	.1271
.300	.1523	.1179	-.1584	.0603	.0015
.520	-.1088	-.1743	-.2221	-.2900	-.2441
.685	-.2726	-.3173	-.3616	-.5259	-.3735
.775	-.1944	-.2036	-.2267	-.2879	-.2619
.900		-.1746	-.1572	-.2149	-.2094

ALPHAO(2) = -4.030 BETAO (2) = -4.030

SECTION (1)LEFT VERTICAL DEPENDENT VARIABLE CP

Z/BV	.1580	.3160	.6000	.8400	.9250
X/CV					
.000	.2698	.2103	.2759	.3451	.2859
.025	.2396	.2308	.2454	.2455	.0963
.050	.2270	.2090	.2349	.2087	.1880
.150	.1284	.1130	.1006	.1023	.0349
.300	.0271	.0062	-.3257	-.0208	-.0505
.520	-.1862	-.2335	-.2856	-.3292	-.2498
.685	-.2662	-.3863	-.4224	-.5388	-.3382
.775	-.1973	-.2335	-.2210	-.2155	-.1658
.900		-.1709	-.1062	-.0684	-.0678

ALPHAO(2) = -4.040 BETAO (3) = .040

SECTION (1)LEFT VERTICAL DEPENDENT VARIABLE CP

Z/BV	.1580	.3160	.6000	.8400	.9250
X/CV					
.000	.4215	.4293	.4953	.4721	.4776
.025	-.2522	-.3633	-.3698	-.2599	-.5407
.050	.0015	-.0619	-.0721	-.1291	-.1506
.150	-.0446	-.0758	-.1023	-.1223	-.1321
.300	-.1113	-.1303	-.4296	-.1580	-.1595
.520	-.2591	-.3016	-.3715	-.4138	-.3182
.685	-.2575	-.4596	-.4977	-.6289	-.3872
.775	-.2150	-.2674	-.2629	-.2929	-.1539
.900		-.1827	-.1017	-.0629	-.0235

ARC11 M6 1A14 O4+T12+S12N25 LEFT VERTICAL (RB1V42)

ALPHAO(2) = -4.040 BETAO (4) = 4.070

SECTION (1)LEFT VERTICAL DEPENDENT VARIABLE CP

Z/BV	.1580	.3160	.6000	.8400	.9250
X/CV					
.000	.2672	.2070	.2456	.1431	.2443
.025	-.5684	-.7087	-.6858	-.6476	-.7350
.050	-.6195	-.5667	-.6145	-.7984	-.7235
.150	-.2607	-.4855	-.5241	-.7149	-.6593
.300	-.2623	-.3228	-.5055	-.4856	-.5583
.520	-.3404	-.3598	-.4728	-.4260	-.3730
.685	-.2874	-.4943	-.4756	-.4446	-.3248
.775	-.2486	-.3099	-.2750	-.2261	-.2095
.900		-.1900	-.1255	-.0799	-.0946

ALPHAO(2) = -4.040 BETAO (5) = 8.130

SECTION (1)LEFT VERTICAL DEPENDENT VARIABLE CP

Z/BV	.1580	.3160	.6000	.8400	.9250
X/CV					
.000	.0062	-.2367	-.1903	-.1419	.0542
.025	-.9132	-1.1540	-.9847	-.5673	-.4900
.050	-.9553	-1.1530	-.9768	-.5689	-.4886
.150	-1.0610	-1.0280	-.9526	-.5603	-.5071
.300	-.3829	-.8208	-.8933	-.5171	-.5136
.520	-.3798	-.4175	-.7209	-.4558	-.4058
.685	-.2870	-.4507	-.6222	-.4069	-.2973
.775	-.2418	-.2859	-.5502	-.3616	-.2734
.900		-.2070	-.4325	-.3077	-.2435

ALPHAO(3) = -.320 BETAO (1) = -8.060

SECTION (1)LEFT VERTICAL DEPENDENT VARIABLE CP

Z/BV	.1580	.3160	.6000	.8400	.9250
X/CV					
.000	-.0369	-.2884	-.2492	-.0276	-.0534
.025	.4182	.4055	.4229	.3921	.2885
.050	.3718	.3539	.3917	.3448	.2860
.150	.2499	.2297	.2300	.2243	.1117
.300	.1301	.1028	-.1541	.0505	-.0174
.520	-.1184	-.1757	-.2168	-.2785	-.2394
.685	-.2661	-.3122	-.3355	-.4283	-.3543
.775	-.1939	-.2028	-.2154	-.2661	-.2543
.900		-.1753	-.1447	-.2156	-.2044

ARC11-716 IA14 O1+T12+S12N25 LEFT VERTICAL (RB1V42)

ALPHAO(3) = -.340 BETAO (2) = -4.010

SECTION (1)LEFT VERTICAL DEPENDENT VARIABLE CP

Z/BV	.1580	.3160	.6000	.8400	.9250
X/CV					
.000	.2328	.1609	.2176	.2770	.2144
.025	.1970	.1937	.2290	.2209	.0820
.050	.1825	.1778	.2063	.1841	.1684
.150	.0930	.0811	.0810	.0906	.0188
.300	-.0002	-.0102	-.2898	-.0378	-.0617
.520	-.1943	-.2405	-.2882	-.3200	-.2489
.685	-.2608	-.3750	-.4070	-.4989	-.3242
.775	-.1943	-.2412	-.2279	-.2069	-.1685
.900		-.1765	-.1060	-.0677	-.0659

ALPHAO(3) = -.340 BETAO (3) = .050

SECTION (1)LEFT VERTICAL DEPENDENT VARIABLE CP

Z/BV	.1580	.3160	.6000	.8400	.9250
X/CV					
.000	.4007	.3814	.4410	.4147	.4243
.025	-.2813	-.3733	-.3788	-.2770	-.5143
.050	-.0314	-.0921	-.0865	-.1335	-.1683
.150	-.0715	-.1020	-.1185	-.1223	-.1404
.300	-.1394	-.1493	-.4546	-.1660	-.1632
.520	-.2641	-.2986	-.3721	-.3989	-.5085
.685	-.2481	-.4467	-.4607	-.5742	-.3499
.775	-.2175	-.2592	-.2659	-.2461	-.1476
.900		-.1808	-.1098	-.0431	-.0179

ALPHAO(3) = -.350 BETAO (4) = 4.090

SECTION (1)LEFT VERTICAL DEPENDENT VARIABLE CP

Z/BV	.1580	.3160	.6000	.8400	.9250
X/CV					
.000	.2205	.1456	.1647	.0602	.1651
.025	-.6141	-.7168	-.7066	-.8249	-.7553
.050	-.6578	-.6039	-.6525	-.7832	-.7381
.150	-.3153	-.5416	-.5811	-.7024	-.6794
.300	-.2962	-.3365	-.5550	-.5254	-.5856
.520	-.3374	-.3425	-.4869	-.4140	-.3512
.685	-.2741	-.4774	-.4533	-.4316	-.3099
.775	-.2489	-.3091	-.2764	-.2269	-.2006
.900		-.1935	-.1315	-.0780	-.0886

ARC11-716 TA14 O1+T12+S12N25 LEFT VERTICAL (RB1V42)

ALPHAO(3) = -.340 BETAO (5) = 8.160

SECTION (1)LEFT VERTICAL DEPENDENT VARIABLE CP

Z/BV	.1580	.3160	.6000	.8400	.9250
X/CV					
.000	-.0525	-.3236	-.2980	-.2246	-.0342
.025	-.9393	-1.1580	-.9763	-.5749	-.4817
.050	-.9796	-1.1510	-.9663	-.5715	-.4803
.150	-1.1500	-1.0770	-.9547	-.5567	-.4916
.300	-.4181	-.9042	-.9029	-.5197	.4883
.520	-.3850	-.4085	-.7437	-.4507	-.4096
.685	-.2834	-.4434	-.6654	-.3941	-.2969
.775	-.2432	-.2774	-.5675	-.3555	-.2665
.900		-.2103	-.4314	-.3086	-.2381

ALPHAO(4) = 4.220 BETAO (1) = -8.060

SECTION (1)LEFT VERTICAL DEPENDENT VARIABLE CP

Z/BV	.1580	.3160	.6000	.8400	.9250
X/CV					
.000	-.5519	-.0888	-.1436	.0676	-.0556
.025	-.2516	-.0527	-.0769	.0283	-.3401
.050	.0516	-.0094	-.0404	-.1271	-.3891
.150	.0726	-.0522	.0014	-.0637	-.2916
.300	.0281	.0133	-.0209	.0118	-.3040
.520	-.0954	-.1335	.0339	-.0093	-.2597
.685	-.0517	-.1172	-.0346	.0848	-.3535
.775	-.0262	-.1721	-.0107	.0619	1.1220
.900		-.0842	-.0600	-.0399	.3371

ALPHAO(4) = 4.210 BETAO (2) = -4.030

SECTION (1)LEFT VERTICAL DEPENDENT VARIABLE CP

Z/BV	.1580	.3160	.6000	.8400	.9250
X/CV					
.000	.1874	.0976	.1362	.1798	.1286
.025	.1670	.1810	.2115	.2079	.0770
.050	.1575	.1604	.1997	.1741	.1578
.150	.0741	.0758	.0686	.0879	.0055
.300	-.0082	-.0108	-.2677	-.0445	-.0689
.520	-.1864	-.2225	-.2733	-.2938	-.2357
.685	-.2463	-.3639	-.3635	-.3837	-.2918
.775	-.1725	-.2213	-.1965	-.1851	-.1508
.900		-.1640	-.0954	-.0541	-.0666

ARC11-716 IA14 O1+T12+S12N25 LEFT VERTICAL (RB1V42)

ALPHAO(4) = 4.210 BETAO (3) = .030

SECTION (1)LEFT VERTICAL DEPENDENT VARIABLE CP

Z/BV	.1580	.3160	.6000	.8400	.9250
X/CV					
.000	.3506	.3392	.3836	.3450	.3608
.025	-.2818	-.3790	-.3537	-.3009	-.4779
.050	-.0629	-.1084	-.0917	-.1348	-.1838
.150	-.0991	-.1126	-.1254	-.1119	-.1432
.300	-.1491	-.1502	-.427[illegible]	-.1710	-.1689
.520	-.2542	-.2691	-.3622	-.3801	-.2881
.685	-.2305	-.4247	-.4351	-.4765	-.3019
.775	-.1991	-.2513	-.2463	-.1950	-.1304
.900		-.1760	-.1026	-.0383	-.0093

ALPHAO(4) = 4.200 BETAO (4) = 4.090

SECTION (1)LEFT VERTICAL DEPENDENT VARIABLE CP

Z/BV	.1580	.3160	.6000	.8400	.9250
X/CV					
.000	.1723	.0877	.0865	.0246	.0645
.025	-.6182	-.6912	-.8965	.7394	-.8241
.050	-.6625	-.6003	-.6417	-.6934	-.7943
.150	-.5442	-.5584	-.5960	-.6319	-.7381
.300	-.2944	-.5059	-.5507	-.5534	-.4647
.520	-.3022	-.3179	-.4359	-.3900	-.2697
.685	-.2454	.4370	-.4000	-.3639	-.2535
.775	-.2144	-.2747	-.2457	-.1992	-.1521
.900		-.1870	-.1194	-.0706	-.0545

ALPHAO(4) = 4.190 BETAO (5) = 8.160

SECTION (1)LEFT VERTICAL DEPENDENT VARIABLE CP

Z/BV	.1580	.3160	.6000	.8400	.9250
X/CV					
.000	-.0896	-.3900	-.3834	-.3256	-.1067
.025	-.8983	-1.0650	-.9569	-.5698	-.4755
.050	-.9735	-1.0380	-.9525	-.5702	-.4723
.150	-1.1690	-1.0400	-.9427	-.5508	-.4723
.300	-.4067	-.8833	-.9046	-.4986	-.4572
.520	-.3446	-.3764	-.7396	-.4259	-.4010
.685	-.2514	-.3997	-.6251	-.3835	-.3061
.775	-.2133	-.2514	-.5011	-.3563	-.2668
.900		-.2127	-.3142	-.3178	-.2253

NR011-716 IA14 01+T12+S12N25 LEFT VERTICAL (RB1V42)

ALPHAO(1) = 8.070 BETAO (1) = -8.050

SECTION (1)LEFT VERTICAL DEPENDENT VARIABLE CP

X/CV \ Z/BV	.1580	.3160	.6000	.8400	.9250
.000	-.1324	-.4376	-.4210	-.2870	-.2514
.025	.3612	.3482	.3504	.3287	.2577
.050	.3172	.3069	.3147	.2955	.2542
.150	.2125	.2044	.1954	.2077	.0822
.300	.1149	.0896	-.1594	.0404	-.0501
.520	-.0366	-.1471	-.1906	-.2412	-.1991
.685	-.2548	-.2995	-.3122	-.3217	-.2898
.775	-.1917	-.2093	-.1911	-.2187	-.2196
.900		-.1906	-.1331	-.1777	-.1858

ALPHAO(5) = 8.080 BETAO (2) = -3.990

SECTION (1)LEFT VERTICAL DEPENDENT VARIABLE CP

X/CV \ Z/BV	.1580	.3160	.6000	.8400	.9250
.000	.1746	.0668	.0904	.1141	.0591
.025	.1361	.1641	.2047	.2024	.0741
.050	.1331	.1460	.1875	.1621	.1344
.150	.0556	.0687	.0621	.0907	.0000
.300	-.0187	-.0147	-.2515	-.0441	-.0759
.520	-.1732	-.2083	-.2611	-.2655	-.2173
.685	-.2401	-.3491	-.3376	-.3467	-.2690
.775	-.1676	-.2206	-.1923	-.1723	-.1474
.900		-.1685	-.1003	-.0501	-.0470

ALPHAO(5) = 7.970 BETAO (3) = .050

SECTION (1)LEFT VERTICAL DEPENDENT VARIABLE CP

X/CV \ Z/BV	.1580	.3160	.6000	.8400	.9250
.000	.3901	.3070	.3381	.2992	.3116
.025	-.2895	-.3769	-.3417	-.2954	-.4275
.050	-.0811	-.1131	-.0833	-.1279	-.1655
.150	-.1068	-.1135	-.1267	-.1095	-.1412
.300	-.1534	-.1459	-.4245	-.1678	-.1650
.520	-.2482	-.2776	-.3503	-.3553	-.2639
.685	-.2105	-.4037	-.3983	-.4203	-.2813
.775	-.1864	-.2489	-.2244	-.1765	-.1181
.900		-.1695	-.0982	-.0305	-.0099

ARC11-718 TA14 01+T12+S12N25 LEFT VERTICAL (RB1V42)

ALPHAO(5) = 7.980 BETAO (4) = 4.130

SECTION (1)LEFT VERTICAL DEPENDENT VARIABLE CP

Z/BV	.1580	.3160	.6000	.8400	.9250
X/CV					
.000	.1716	.0555	.0370	-.0763	-.0024
.025	-.6237	-.6770	-.6649	-.6796	-.7986
.050	-.6037	-.6171	-.6116	-.6456	-.7503
.150	-.5131	-.5281	-.5946	-.6177	-.7142
.300	-.2890	-.2851	-.5204	-.5107	-.3618
.520	-.2962	-.3004	-.3956	-.3368	-.2402
.685	-.2202	-.3902	-.3684	-.3091	-.2332
.775	-.1967	-.2363	-.2265	-.1741	-.1419
.900		-.1914	-.1129	-.0568	-.0393

ALPHAO(5) = 7.940 BETAO (5) = 8.220

SECTION (1)LEFT VERTICAL DEPENDENT VARIABLE CP

Z/BV	.1580	.3160	.6000	.8400	.9250
X/CV					
.000	-.1384	-.4353	-.4348	-.4069	-.1725
.025	-.9558	-.9684	-.9725	-.5696	-.4478
.050	-1.0150	-.9562	-.8651	-.5600	-.4478
.150	-1.0180	-1.0280	-.8512	-.5210	-.4367
.300	.4190	-.8641	-.8433	-.4731	-.4146
.520	-.2858	-.2445	-.6986	-.4213	-.3538
.685	-.2174	-.2992	-.5785	-.3823	-.3168
.775	-.2165	-.2281	-.4517	-.3533	-.2668
.900		-.2209	-.2928	-.3385	-.2196

APC11-716 IA14 OI+T12+S12N25 LEFT VERTICAL (RB1V43) (15 FEB 74)

REFERENCE DATA

SREF = 2.4210 SQ.FT. XMRP = 29.5800 INCHES
LREF = 38.7090 INCHES YMRP = .0000 INCHES
BREF = 38.7090 INCHES ZMRP = .0000 INCHES
SCALE = .0500 SCALE

PARAMETRIC DATA

MACH = .850 ELEVON = .000
RUDDER = .000 SPOBRK = .000

ALPHAO(1) = -7.890 BETAO (1) = -8.020

SECTION (1)LEFT VERTICAL DEPENDENT VARIABLE CP

Z/BV	.1580	.3160	.6000	.8400	.9250
X/CV					
.000	.1760	-.0035	.0462	.2127	.1523
.025	.5144	.4861	.4987	.4497	.3247
.050	.4682	.4346	.4541	.4010	.3517
.150	.3352	.3046	.2837	.2617	.1559
.500	.2085	.1715	-.1020	.0950	.0177
.520	-.0523	-.1344	-.1759	-.2742	-.2540
.685	-.3022	-.4248	-.6832	-.9544	-.8106
.775	-.2294	-.2541	-.3210	-.6138	-.3948
.900		-.2375	-.2771	-.3507	-.2589

ALPHAO(1) = -7.780 BETAO (2) = -4.000

SECTION (1)LEFT VERTICAL DEPENDENT VARIABLE CP

Z/BV	.1580	.3160	.6000	.8400	.9250
X/CV					
.000	.3682	.3065	.3801	.4311	.3672
.025	.3016	.2758	.3007	.2720	.1124
.050	.2938	.2618	.2647	.2410	.2089
.150	.1879	.1637	.1450	.1322	.0479
.500	.0025	.0558	-.2762	.0007	-.0279
.520	-.1400	-.1948	-.2420	-.3189	-.2703
.685	-.3137	-.5732	-.8177	-.7502	-.5543
.775	-.2261	-.2831	-.3454	-.4765	-.2636
.900		-.2164	-.1505	-.1864	-.0924

ARC11-716 IA14 01+T12+S12N25 LEFT VERTICAL (RB1V43)

ALPHAO(1) = -7.780 BETAO (3) = .040

SECTION (1)LEFT VERTICAL DEPENDENT VARIABLE CP

Z/BV	.1580	.3160	.6000	.8400	.9250
X/CV					
.000	.4878	.4882	.5599	.5374	.5382
.025	-.1693	-.3087	-.3543	-.3070	-.5512
.050	.0724	-.0162	-.0280	-.1043	-.1521
.150	.0071	-.0340	-.0689	-.1037	-.1209
.300	-.0705	-.0937	-.3821	-.1417	-.1532
.520	-.2469	-.2971	-.3186	-.3794	-.3451
.685	-.3245	-.6297	-.8437	-.5532	-.6185
.775	-.2560	-.3679	-.4408	-.4177	-.2705
.900		-.2547	-.1951	-.2386	-.1117

ALPHAO(1) = -7.850 BETAO (4) = 4.110

SECTION (1)LEFT VERTICAL DEPENDENT VARIABLE CP

Z/BV	.1580	.3160	.6000	.8400	.9250
X/CV					
.000	.3620	.3161	.3487	.2676	.3415
.025	-.4700	-.8011	-.6211	-.9059	-.8155
.050	-.5234	-.6236	-.8059	-.9078	-.8094
.150	-.2221	-.4908	-.6136	-.8072	-.7531
.300	-.2751	-.3508	-.4789	-.6129	-.6741
.520	-.3579	-.3720	-.4861	-.4640	-.4607
.685	-.3388	-.5912	-.5534	-.3823	-.3412
.775	-.2809	-.4087	-.3328	-.2113	-.2463
.900		-.2467	-.1822	-.1093	-.1526

ALPHAO(1) = -7.890 BETAO (5) = 8.170

SECTION (1)LEFT VERTICAL DEPENDENT VARIABLE CP

Z/BV	.1580	.3160	.6000	.8400	.9250
X/CV					
.000	.1673	.0042	.0079	-.0118	.1474
.025	-.7232	-1.0700	-1.0600	.5771	-.5155
.050	-.7620	-1.0460	-1.0620	.5730	-.5202
.150	-.8565	-.9669	-.9552	-.5613	-.5246
.300	-.4162	-.8737	-.9039	.5537	-.5426
.520	-.5610	-.5117	-.7612	-.5198	-.4667
.685	-.3408	-.4846	-.6234	-.4551	-.3935
.775	-.2628	-.3482	-.5700	-.4238	-.3719
.900		-.2614	-.4954	-.3902	-.3437

APC11-716 IA14 OS+T12+S12N2O LEFT VERTICAL (RB1V43)

ALPHAO(2) = -3.880 BETAO (1) = -8.060

SECTION (1)LEFT VERTICAL DEPENDENT VARIABLE CP

X/CV \ Z/BV	.1580	.3160	.6000	.8400	.9250
.000	.1335	-.0599	-.0410	.1062	.0561
.025	.4813	.4361	.4503	.4067	.2836
.050	.4129	.3874	.4199	.3609	.3006
.190	.2836	.2603	.2508	.2358	.1169
.300	.1738	.1368	-.1578	.0562	-.0151
.520	-.0171	-.1506	-.1946	-.2950	-.2703
.685	-.3062	-.4168	-.6122	-.8705	-.7425
.775	-.2335	-.2658	-.3175	-.5577	-.3880
.900		-.2445	-.2762	-.3268	-.2632

ALPHAO(2) = -3.080 BETAO (2) = -4.020

SECTION (1)LEFT VERTICAL DEPENDENT VARIABLE CP

X/CV \ Z/BV	.1580	.3160	.6000	.8400	.9250
.000	.3027	.2490	.3081	.3443	.2753
.025	.2478	.2245	.2686	.2407	.0897
.050	.2375	.2094	.2507	.2031	.1816
.190	.1568	.1213	.1175	.11[illegible]	.0166
.300	.0394	.0251	-.2974	-.0204	-.0784
.520	-.1674	-.2195	-.2653	-.3303	-.2801
.685	-.3112	-.5151	-.7281	-.7453	-.4977
.775	-.2217	-.2891	-.3167	-.3530	-.2424
.900		-.2217	-.1519	-.1090	-.0725

ALPHAO(2) = -3.640 BETAO (3) = .030

SECTION (1)LEFT VERTICAL DEPENDENT VARIABLE CP

X/CV \ Z/BV	.1580	.3160	.6000	.8400	.9250
.000	.4040	.4285	.4990	.4638	.4724
.025	-.2113	-.3556	-.3742	-.3129	-.5426
.050	.0108	-.0609	-.0591	-.1167	-.1713
.190	-.0482	-.0904	-.0948	-.1131	-.1476
.300	-.1153	-.1283	-.4181	-.1618	-.1733
.520	-.2678	-.3002	-.3392	-.3963	-.3455
.685	-.3026	-.5710	-.7684	-.6082	-.5238
.775	-.2447	-.3422	-.4141	-.4066	-.2214
.900		-.2519	-.1793	-.1679	-.0722

ORIGINAL PAGE IS OF POOR QUALITY

ARC11-716 TA14 OI+T12+S12N25 LEFT VERTICAL (RB1V43)

ALPHAO(2) = -3.880 BETAO (4) = 4.090

SECTION (1)LEFT VERTICAL DEPENDENT VARIABLE CP

X/CV \ Z/BV	.1580	.3160	.6000	.8400	.9250
.000	.5049	.2444	.2660	.1821	.2562
.025	-.5245	-.6922	-.8210	-.9129	-.8371
.050	-.5684	-.7563	-.8045	-.8551	-.8327
.150	-.2936	-.5330	-.6627	-.7836	-.7544
.300	-.3521	-.3377	-.5248	-.6175	-.7146
.520	-.3554	-.3617	-.5090	-.4693	-.4485
.685	-.3251	-.3707	-.5335	-.3568	-.3215
.775	-.2750	-.3756	-.3325	-.1982	-.2300
.900		-.3322	-.1855	-.0945	-.1353

ALPHAO(2) = 3.900 BETAO (5) = 8.150

SECTION (1)LEFT VERTICAL DEPENDENT VARIABLE CP

X/CV \ Z/BV	.1580	.3160	.6000	.8400	.9250
.000	.1234	-.0564	-.7894	-.0969	.0636
.025	-.7383	-1.0790	-1.0850	.5765	-.5153
.050	-.7770	-1.0670	-1.0630	-.5721	-.5149
.150	-.8974	-1.0120	-.5578	-.5761	-.5216
.300	-.4735	-.9219	.9165	-.5502	-.5314
.520	-.5516	.1911	-.8002	-.5219	.5761
.685	-.3314	-.4525	-.6662	-.4500	-.5970
.775	-.2485	-.3210	-.5844	-.4176	-.5798
.900		-.2548	-.4884	-.3895	-.5478

ALPHAO(3) = -.310 BETAO (1) = -8.080

SECTION (1)LEFT VERTICAL DEPENDENT VARIABLE CP

X/CV \ Z/BV	.1580	.3160	.6000	.8400	.9250
.000	.0872	-.1245	-.1422	.0157	-.0159
.025	.4253	.4046	.4125	.3792	.2644
.050	.3877	.3528	.3829	.3349	.2708
.150	.2564	.2370	.2267	.2252	.0919
.300	.1499	.1165	-.1752	.0443	-.0410
.520	-.0892	-.1600	-.2051	-.3029	-.2613
.685	-.3065	-.3730	-.5137	-.7569	-.6573
.775	-.2318	-.2578	-.2929	-.4940	-.3387
.900		-.2234	-.2545	-.3126	-.2537

[illegible]-716 [illegible] LEFT VERTICAL (RB1V45)

ALPHA [illegible] = -.350 BETA [illegible] = 5.040

SECTION (1)LEFT VERTICAL DEPENDENT VARIABLE CP

Z/BV	.1560	.3160	.6000	.8400	.9250
X/CV					
.000	.2175	.1008	.1466	.1879	.1229
.025	.2680	.2643	.3062	.2772	.1444
.050	.2458	.2357	.2743	.2396	.2054
.150	.1584	.1375	.1311	.1372	.0295
.300	[illegible]	.0404	-.2572	-.0142	-.1736
.520	-.1535	-.2086	-.2564	-.3199	-.2604
.685	-.3591	-.4411	-.5719	-.6152	-.4813
.775	-.2[illegible]	-.2757	-.2728	-.3022	-.2472
.900		-.2162	-.1506	-.1555	-.1446

ALPHA(3) = -.340 BETA(3) = .040

SECTION (1)LEFT VERTICAL DEPENDENT VARIABLE CP

Z/BV	.1560	.3160	.6000	.8400	.9250
X/CV					
.000	.3028	.3708	.4442	.4046	.4096
.025	-.2533	-.3808	-.3745	-.3330	-.5477
.050	-.0421	-.0955	-.0801	-.1411	-.1911
.150	-.0907	-.1080	-.1162	-.1213	-.1604
.300	-.1452	-.1445	-.4482	-.1800	-.1695
.520	-.2685	-.2996	-.3442	-.4125	-.3355
.685	-.2753	-.3[illegible]9	-.6[illegible]4	-.6252	-.4531
.775	-.2536	-.3202	-.3729	-.3516	-.1774
.900		-.2762	-.1596	-.1149	-.0415

ALPHA(3) = -.350 BETA(4) = 4.090

SECTION (1)LEFT VERTICAL DEPENDENT VARIABLE CP

Z/BV	.1560	.3160	.6000	.8400	.9250
X/CV					
.000	.2421	.1921	.2002	.1125	.1868
.025	-.5711	-.8991	-.0054	-.8951	-.8096
.050	-.6046	-.8118	-.7920	-.8644	.9215
.150	-.3288	.5467	-.6417	-.7496	.7491
.300	-.3591	.3317	-.5372	-.6375	-.7395
.520	-.3489	-.3557	-.5194	-.4766	-.4042
.685	-.3046	-.5600	-.5190	-.5622	-.2958
.775	-.2[illegible]	.3[illegible]3	-.3277	-.2052	-.1980
.900		-.2528	-.1420	-.0990	-.1034

AFC11-716 1A14 OL+T12+S12N25 LEFT VERTICAL (FB1V43)

ALPHAO(3) = -.340 BETAO (3) = 8.150

SECTION (1)LEFT VERTICAL DEPENDENT VARIABLE CP

Z/BV	.1580	.3180	.6000	.8400	.9250
X/CV					
.000	.0940	-.1044	-.1689	-.1798	-.0140
.025	-.7263	-1.0940	-1.0570	-.5944	-.5099
.050	-.7747	-1.0990	-1.0500	-.5812	-.5091
.150	-.9589	-1.0490	-.9666	-.5702	-.5245
.500	-.5120	-.9653	-.9425	-.5420	-.5191
.520	-.5262	-.4367	-.8084	-.5030	-.4674
.685	-.3281	-.4273	-.6673	-.4431	-.3934
.775	-.2461	-.3067	-.5676	-.4055	-.3628
.900		-.2541	-.4652	-.3776	-.3329

ALPHAO(4) = 4.150 BETAO (1) = -8.090

SECTION (1)LEFT VERTICAL DEPENDENT VARIABLE CP

Z/BV	.1580	.3180	.6000	.8400	.9250
X/CV					
.000	.0163	.1985	-.2595	-.0975	-.1225
.025	.5941	.3711	.3757	.3467	.2606
.050	.5416	.3244	.3489	.3054	.2445
.150	.2269	.2181	.2022	.2091	.0819
.500	.1330	.1019	-.1919	.0364	-.0628
.520	-.0492	-.1553	-.1965	-.2885	-.2573
.685	-.2859	-.3575	-.4200	-.5351	-.4588
.775	-.2082	-.2520	-.2361	-.3737	-.2941
.900		-.2062	-.1975	-.2889	-.2473

ALPHAO(4) = 4.090 BETAO (2) = -4.020

SECTION (1)LEFT VERTICAL DEPENDENT VARIABLE CP

Z/BV	.1580	.3180	.6000	.8400	.9250
X/CV					
.000	.2121	.1355	.1765	.1910	.1284
.025	.1484	.1008	.2205	.2036	.0614
.050	.1510	.1521	.2046	.1621	.1399
.150	.0882	.0737	.0798	.0824	-.0240
.500	-.0106	-.0053	-.2742	-.0574	-.1029
.520	-.1060	-.2142	-.2704	-.3246	-.2518
.685	-.2742	-.4224	-.5150	-.5251	-.3672
.775	-.1916	-.2651	-.2473	-.2294	-.1848
.900		-.2020	-.1541	-.0860	-.0622

ARC11-716 IA14 O1+T12+S12N25 LEFT VERTICAL (RB1V43)

ALPHAO(4) = 4.050 BETAO (3) = .030

SECTION (1)LEFT VERTICAL DEPENDENT VARIABLE CP

Z/BV	.1580	.3160	.6000	.8400	.9250
X/CV					
.000	.3316	.3364	.3943	.3442	.3542
.025	-.2673	-.3908	-.3653	-.3424	-.5155
.050	-.0819	-.1167	-.0898	-.1415	-.2025
.150	-.1210	-.1212	-.1168	-.1114	-.1659
.300	-.1697	-.1486	-.4293	-.1830	-.1981
.520	-.2582	-.2826	-.3455	-.4116	-.3119
.685	-.2446	-.4777	-.6203	-.5865	-.3745
.775	-.2163	-.2943	-.3119	-.2771	-.1363
.900		-.2139	-.1463	-.0687	-.0173

ALPHAO(4) = 4.140 BETAO (4) = 4.140

SECTION (1)LEFT VERTICAL DEPENDENT VARIABLE CP

Z/BV	.1580	.3160	.6000	.8400	.9250
X/CV					
.000	.2114	.1261	.1275	.0281	.0932
.025	-.6133	-.8261	-.7735	-.6076	-.7962
.050	-.5764	-.7506	-.7779	-.7956	-.7754
.150	-.3762	-.5901	-.6288	-.7053	-.7597
.300	-.3472	-.3139	-.5607	-.6559	-.7377
.520	-.3173	-.3292	-.4791	-.4430	-.322[illegible]
.685	-.2506	-.4790	-.4685	-.3272	-.2370
.775	-.2268	-.2946	-.2958	-.1761	-.1421
.900		-.2222	-.1581	-.0680	-.0435

ALPHAO(4) = 4.150 BETAO (5) = 8.190

SECTION (1)LEFT VERTICAL DEPENDENT VARIABLE CP

Z/BV	.1580	.3160	.6000	.8400	.9250
X/CV					
.000	.0168	-.1950	-.2808	-.3006	-.1108
.025	-.8093	-1.1390	-.9776	-.6102	-.4987
.050	-.8507	-1.1520	-.9788	-.6039	-.4968
.150	-1.0340	-1.1250	-.9688	-.5795	-.4963
.300	-.5549	-.9381	-.9686	-.5340	-.4800
.520	-.3300	-.3786	-.8742	-.4707	-.4358
.685	-.2693	-.3568	-.7812	-.4304	-.3461
.775	-.2381	-.2528	-.5524	-.4078	-.3164
.900		-.2399	-.3208	-.3775	-.2927

ARC11-716 IA14 O1+T12+S12N25 LEFT VERTICAL (RB1V43)

ALPHAO(5) = 8.040 BETAO (1) = -8.070

SECTION (1)LEFT VERTICAL DEPENDENT VARIABLE CP

Z/BV	.1580	.3160	.6000	.8400	.9250
X/CV					
.000	-.0162	-.2682	-.3173	-.2260	-.2365
.025	.3145	.3308	.3426	.3162	.2396
.050	.2750	.2869	.3259	.2796	.2207
.150	.1833	.1931	.1879	.2018	.0698
.300	.0974	.0927	-.1724	.0383	-.0714
.520	-.0824	-.1445	-.1888	-.2731	-.2085
.685	-.2712	-.3426	-.3893	-.4166	-.3393
.775	-.2054	-.2340	-.2246	-.2799	-.2405
.900		-.2086	-.1515	-.2272	-.2172

ALPHAO(5) = 8.010 BETAO (2) = -4.020

SECTION (1)LEFT VERTICAL DEPENDENT VARIABLE CP

Z/BV	.1580	.3160	.6000	.8400	.9250
X/CV					
.000	.1892	.0888	.1160	.1116	.0503
.025	.0499	.1424	.2076	.1852	.0534
.050	.0796	.1285	.1845	.1482	.1169
.150	.0168	.0586	.0682	.0797	-.0229
.300	.0448	-.0131	-.2645	-.0571	-.1074
.520	-.1674	-.2016	-.2618	-.3015	-.2440
.685	-.2550	-.3989	-.4732	-.5010	-.3378
.775	-.1863	-.2619	-.2334	-.2096	-.1677
.900		-.2065	-.1287	-.0531	-.0318

ALPHAO(5) = 8.010 BETAO (3) = .030

SECTION (1)LEFT VERTICAL DEPENDENT VARIABLE CP

Z/BV	.1580	.3160	.6000	.8400	.9250
X/CV					
.000	.2930	.2880	.3492	.2947	.3051
.025	-.2577	-.3879	-.3691	-.3430	-.4807
.050	-.0969	-.1426	-.0905	-.1448	-.2165
.150	-.1232	-.1268	-.1297	-.1151	-.1720
.300	-.1663	-.1500	-.4410	-.1857	-.2085
.520	-.2564	-.2768	-.3433	-.3923	-.2877
.685	-.2281	-.4358	-.5528	-.5106	-.3266
.775	-.2032	-.2727	-.2846	-.2241	-.1175
.900		-.2037	-.1297	-.0469	-.0020

AFC11-716 IA14 O1+T12+S12N25 LEFT VERTICAL (RB1V43)

ALPHAO(4) = 8.000 BETAO (4) = 4.130

SECTION (1)LEFT VERTICAL DEPENDENT VARIABLE CP

Z/BV	.1580	.3160	.6000	.8400	.9250
X/CV					
.000	.1874	.0899	.0574	-.0577	.0058
.025	-.5258	-.8043	-.7578	-.7519	-.8351
.050	-.4052	-.7597	-.7576	-.7268	-.8002
.150	-.3139	-.4795	-.6436	-.6728	-.7570
.300	-.3334	-.3046	-.5590	-.6493	-.6863
.520	-.3083	-.3129	-.4367	-.3990	-.2509
.685	-.2489	-.4020	-.4274	-.2968	-.2025
.775	-.[illegible]187	-.2596	-.2558	-.1737	-.1150
.900		-.2174	-.1361	-.0660	-.0249

ALPHAO(5) = 8.090 BETAO (5) = 8.250

SECTION (1)LEFT VERTICAL DEPENDENT VARIABLE CP

Z/BV	.1580	.3160	.6000	.8400	.9250
X/CV					
.000	-.0204	-.2565	-.3495	-.4171	-.1932
.025	-.8576	-1.1680	-.8653	-.6514	-.4938
.050	-.9054	-1.1700	-.8738	-.6398	-.4788
.150	-.5833	-1.1750	-.8857	-.5897	-.4622
.300	-.5962	-.7234	-.8941	-.5383	-.4263
.520	-.2981	-.2271	-.8328	-.4746	-.4028
.685	-.2424	-.2749	-.7175	-.4362	-.3653
.775	-.2402	-.2434	-.5119	-.4114	-.3132
.900		-.2436	-.2771	-.4051	-.2799

ORIGINAL PAGE IS OF POOR QUALITY

ARC11-716 IA14 O1+T12+S12N25 LEFT VERTICAL (RB1V44) (15 FEB 74)

REFERENCE DATA

SREF = 2.4210 SQ.FT. XMRP = 29.5800 INCHES
LREF = 38.7090 INCHES YMRP = .0000 INCHES
BREF = 38.7090 INCHES ZMRP = .0000 INCHES
SCALE = .0300 SCALE

PARAMETRIC DATA

MACH = .900 ELEVON = .000
RUDDER = .000 SPDBRK = .000

ALPHAO(1) = -7.970 BETAO (1) = -8.050

SECTION (1)LEFT VERTICAL DEPENDENT VARIABLE CP

Z/BV	.1580	.3160	.6000	.8400	.9250
X/CV					
.000	.2461	.1074	.1448	.2335	.1489
.025	.5257	.4900	.4891	.4457	.3295
.050	.4815	.4410	.4468	.3977	.3542
.150	.3479	.3198	.2892	.2714	.1654
.300	.2282	.1838	.0685	.1106	.0374
.520	-.0176	-.1033	-.1421	-.2231	-.2947
.685	-.3409	-.5690	-.9639	-1.0880	-1.0440
.775	-.2472	-.3075	-.4596	-.9850	-.9899
.900		-.2506	-.3348	-.5689	-.3956

ALPHAO(1) = -7.980 BETAO (2) = -4.000

SECTION (1)LEFT VERTICAL DEPENDENT VARIABLE CP

Z/BV	.1580	.3160	.6000	.8400	.9250
X/CV					
.000	.3990	.3569	.4114	.4536	.3844
.025	.3024	.2631	.2984	.2792	.1149
.050	.2937	.2596	.2874	.2492	.2201
.150	.1938	.1714	.1607	.1504	.0579
.300	.0938	.0697	-.0592	.0304	-.0207
.520	-.1132	-.1664	-.2012	-.2590	-.3474
.685	-.3527	-.6628	-1.0690	-.7833	-.7219
.775	-.2398	-.3667	-.6570	-.6556	-.4794
.900		-.2739	-.2733	-.3511	-.2002

ARC11-716 IA14 C1+T12+S12N25 LEFT VERTICAL (RB1V44)

ALPHAO(1) = -7.960 BETAO (3) = .050

SECTION (1)LEFT VERTICAL DEPENDENT VARIABLE CP

Z/BV	.1580	.3160	.6000	.8400	.9250
X/CV					
.000	.4941	.4900	.5673	.5414	.5453
.025	-.1454	-.2995	-.3411	-.3143	-.5165
.050	.0882	-.0057	-.0189	-.0855	-.1868
.150	.0067	-.0242	-.0574	-.0845	-.1050
.300	-.0668	-.0811	-.2073	-.1178	-.1198
.520	-.2098	-.2709	-.2935	-.3151	-.3720
.685	-.4018	-.6992	-1.1060	-.5656	-.8347
.775	-.2685	-.4547	-.6570	-.4824	-.3614
.900		-.3344	-.3751	-.3774	-.2274

ALPHAO(1) = -7.970 BETAO (4) = 4.100

SECTION (1)LEFT VERTICAL DEPENDENT VARIABLE CP

Z/BV	.1580	.3160	.6000	.8400	.9250
X/CV					
.000	.3987	.3652	.3787	.3132	.3664
.025	-.4101	-.8022	-.8286	-.8711	-1.1090
.050	-.4543	-.6364	-.8220	-.8870	-1.1390
.150	-.1816	-.4742	-.6959	-.7666	-.7270
.300	-.3010	-.3748	-.4824	-.6022	-.5545
.520	-.3882	-.3332	-.4303	-.5046	-.4196
.685	-.4101	-.6226	-.8381	-.3587	-.3073
.775	-.2765	-.4875	-.4503	-.2287	-.2462
.900		-.3416	-.2667	-.1924	-.1760

ALPHAO(1) = -8.000 BETAO (5) = 8.170

SECTION (1)LEFT VERTICAL DEPENDENT VARIABLE CP

Z/BV	.1580	.3160	.6000	.8400	.9250
X/CV					
.000	.2414	.1034	.1098	.0212	.1503
.025	-.6084	-.9236	-1.1300	-.7564	-.6525
.050	-.6461	-.8938	-1.1390	-.7526	-.6518
.150	-.7192	-.8439	-1.0720	-.7640	-.6556
.300	-.3921	-.7639	-.9700	-.7133	-.6430
.520	-.5418	-.6006	-.7992	-.6050	-.5242
.685	-.4822	-.7035	-.6504	-.4992	-.4238
.775	-.2835	-.5010	-.5934	-.4555	-.3943
.900		-.3464	-.5072	-.4130	-.3612

ARC11-716 1A14 01+T12+S12N25 LEFT VERTICAL (RB1V44)

ALPHAO(2) = -4.070 BETAO (1) = -8.080

SECTION (1)LEFT VERTICAL DEPENDENT VARIABLE CP

Z/BV	.1580	.3160	.6000	.8400	.9250
X/CV					
.000	.2080	.0577	.0672	.1275	.0505
.025	.4686	.4349	.4338	.3981	.2789
.050	.4212	.3890	.3958	.3590	.3008
.150	.2930	.2742	.2448	.2357	.1211
.300	.1826	.1482	-.0507	.0673	-.0032
.520	-.0487	-.1273	-.1770	-.2488	-.3156
.685	-.3542	-.5521	-.8676	-1.0810	-1.0450
.775	-.2574	-.3073	-.4089	-.8460	-.9500
.900		-.2560	-.3180	-.5374	-.3521

ALPHAO(2) = -3.970 BETAO (2) = -4.030

SECTION (1)LEFT VERTICAL DEPENDENT VARIABLE CP

Z/BV	.1580	.3160	.6000	.8400	.9250
X/CV					
.000	.3409	.2842	.3187	.3670	.3034
.025	.2091	.1890	.2457	.2461	.0894
.050	.2247	.1837	.2360	.2084	.1872
.150	.1164	.1125	.1095	.1159	.0242
.300	.0273	.0232	-.1247	-.0052	-.0606
.520	-.1497	-.1922	-.2282	-.2868	-.3802
.685	-.3376	-.6095	-1.0530	-.8578	-.7289
.775	-.2317	-.3520	-.5294	-.7134	-.4533
.900		-.2600	-.2269	-.3548	-.2221

ALPHAO(2) = -3.880 BETAO (3) = .030

SECTION (1)LEFT VERTICAL DEPENDENT VARIABLE CP

Z/BV	.1580	.3160	.6000	.8400	.9250
X/CV					
.000	.4087	.3979	.4974	.4661	.4747
.025	-.2308	-.3685	-.3902	-.3584	-.5336
.050	.0112	-.0826	-.0592	-.1167	-.2307
.150	-.0882	-.0905	-.0963	-.1019	-.1413
.300	-.1416	-.1274	-.2846	-.1482	-.1432
.520	-.2536	-.2860	-.3116	-.3465	-.3979
.685	-.3950	-.6298	-1.0970	-.5396	-.6490
.775	-.2643	-.4184	-.5467	-.4460	-.2773
.900		-.3233	-.2609	-.3347	-.1893

ARC11-716 IA14 OL+T12+S12N25 LEFT VERTICAL (RB1V44)

ALPHAO(2) = -3.920 BETAO (4) = 4.080

SECTION (1)LEFT VERTICAL DEPENDENT VARIABLE CP

Z/BV	.1580	.3160	.6000	.8400	.9250
X/CV					
.000	.3396	.2943	.2895	.2152	.2860
.025	-.5082	-.8215	-.9108	-.8183	-.8198
.050	-.4987	-.7233	-.9080	-.8062	-.7976
.150	-.2338	-.5127	-.7868	-.7583	-.7621
.300	-.3778	-.4309	-.5333	-.6909	-.7418
.520	-.4372	-.3810	-.4149	-.5515	-.4834
.685	-.5313	-.5533	-.8286	-.3604	-.3152
.775	-.2838	-.4111	-.4414	-.2781	-.2712
.900		-.3020	-.2337	-.2130	-.1995

ALPHAO(2) = -3.930 BETAO (5) = 8.150

SECTION (1)LEFT VERTICAL DEPENDENT VARIABLE CP

Z/BV	.1580	.3160	.6000	.8400	.9250
X/CV					
.000	.1918	.0473	.0208	-.0800	.0498
.025	-.6265	-.9533	-1.1560	-.7448	-.6211
.050	-.6705	-.9366	-1.1610	-.7376	-.6068
.150	-.7714	-.9053	-1.1170	-.7238	-.6204
.300	-.3917	-.8288	-1.0130	-.6859	-.6214
.520	-.3943	-.6106	-.8247	-.5909	-.5259
.685	-.4220	-.6533	-.7287	-.5005	-.4326
.775	-.2959	-.4284	-.6330	-.4618	-.3934
.900		-.3067	-.5125	-.4192	-.3619

ALPHAO(5) = .060 BETAO (1) = -8.080

SECTION (1)LEFT VERTICAL DEPENDENT VARIABLE CP

Z/BV	.1580	.3160	.6000	.8400	.9250
X/CV					
.000	.1671	.0011	-.0228	.0178	-.0437
.025	.4159	.3821	.3893	.3584	.2507
.050	.3719	.3443	.3587	.3136	.2623
.150	.2511	.2395	.2122	.2066	.0880
.300	.1509	.1189	-.0690	.0393	-.0435
.520	-.0673	-.1479	-.2056	-.2729	-.3222
.685	-.3515	.4972	-.6898	-1.0260	-.9995
.775	-.2486	-.3026	-.3832	-.6[illegible]	-.6579
.900		-.2598	-.2874	-.467[illegible]	-.3401

ARC11-716 IA14 O1+T12+S12N25 LEFT VERTICAL (RB1V44)

ALPHAO(3) = -.320 BETAO (2) = -4.030

SECTION (1)LEFT VERTICAL DEPENDENT VARIABLE CP

Z/BV	.1580	.3160	.6000	.8400	.9250
X/CV					
.000	.2917	.2102	.2406	.2759	.2150
.025	.1596	.1493	.2235	.2303	.0774
.050	.1711	.1441	.2112	.1939	.1713
.150	.0651	.0766	.0899	.1054	.0064
.300	-.0077	-.0021	-.1558	-.0310	-.0760
.520	-.1658	-.2073	-.2501	-.3056	-.3734
.685	-.3596	-.5395	-.9101	-.8873	-.6844
.775	-.2542	-.3390	-.4205	-.6291	-.3527
.900		-.2628	-.2012	-.2596	-.1844

ALPHAO(3) = -.320 BETAO (3) = .050

SECTION (1)LEFT VERTICAL DEPENDENT VARIABLE CP

Z/BV	.1580	.3160	.6000	.8400	.9250
X/CV					
.000	.3553	.3353	.4406	.4095	.4165
.025	-.2950	-.4173	-.3708	-.3443	-.5067
.050	-.0536	-.1322	-.0664	-.1133	-.1975
.150	-.1532	-.1267	-.1057	-.1001	-.1547
.300	-.1984	-.1482	-.3233	-.1633	-.1653
.520	-.2737	-.2870	-.3178	-.3643	-.4064
.685	-.3334	-.3613	-.9362	-.5085	-.4779
.775	-.2521	-.3827	-.4852	-.4073	-.2548
.900		-.2954	-.2289	-.2842	-.1432

ALPHAO(3) = -.330 BETAO (4) = 4.100

SECTION (1)LEFT VERTICAL DEPENDENT VARIABLE CP

Z/BV	.1580	.3160	.6000	.8400	.9250
X/CV					
.000	.3026	.2380	.2086	.1512	.2132
.025	-.5239	-.8206	-.9463	-.7651	-.7356
.050	-.5066	-.7674	-.9487	-.7541	-.7454
.150	-.2888	-.5186	-.8338	-.7033	-.8475
.300	-.4278	-.4761	-.5756	-.6809	-.6952
.520	-.4164	-.5640	-.5815	-.5838	-.4094
.685	-.3082	-.5026	-.8482	-.3972	-.2705
.775	-.2844	-.3805	-.4458	-.3116	-.2927
.900		-.2927	-.2204	-.2222	-.1591

ARC11-716 IA14 O1+T12+S12N25 LEFT VERTICAL (RB1V44)

ORIGINAL PAGE IS OF POOR QUALITY

ALPHAO(3) = -.350 BETAO (3) = 8.150

SECTION (1).EFT VERTICAL DEPENDENT VARIABLE CP

Z/BV	.1580	.3160	.6000	.8400	.9250
X/CV					
.000	.1538	.0070	-.0651	-.1634	-.0299
.025	-.8310	-.9688	-1.1620	-.7176	-.5847
.050	-.6728	-.9658	-1.1550	-.7017	-.5695
.150	-.8152	-.9458	-1.1600	-.6934	-.5862
.300	-.4322	-.8681	-1.0580	-.6640	-.5518
.520	-.5914	-.5938	-.8443	-.5755	-.4989
.685	-.3879	-.5792	-.7403	-.4971	-.4295
.775	-.2794	-.4018	-.5823	-.4647	-.4037
.900		-.2765	-.4740	-.4259	-.3701

ALPHAO(4) = 4.200 BETAO (1) = -8.100

SECTION (1)LEFT VERTICAL DEPENDENT VARIABLE CP

Z/BV	.1580	.3160	.5000	.8400	.9250
X/CV					
.000	.0960	-.0680	-.1368	-.0935	-.1432
.025	.3582	.3505	.3518	.3228	.2359
.050	.3202	.3092	.3159	.2808	.2501
.150	.2073	.2041	.1811	.1880	.0664
.300	.1225	.1009	-.1600	.0275	-.0758
.520	-.0786	-.1503	-.2203	-.2339	-.3222
.685	-.3406	-.4418	-.5601	-.6234	-.7498
.775	-.2360	-.2984	-.3475	-.4674	-.4630
.900		-.2423	-.2375	-.4130	-.2909

ALPHAO(4) = 4.190 BETAO (2) = -4.020

SECTION (1).EFT VERTICAL DEPENDENT VARIABLE CP

Z/BV	.1580	.3160	.6000	.8400	.9250
X/CV					
.000	.2445	.1700	.1622	.2135	.1330
.025	.0897	.1032	.2011	.1929	.0368
.050	[illegible]	[illegible]	.1850	.1557	.1261
.150	.0148	.0363	.0755	.0803	-.0364
.300	-.0423	-.0258	-.2031	-.0567	-.1156
.520	-.1744	-.2033	-.2496	-.3183	-.3283
.685	-.3187	-.5028	-.7143	-.7408	-.4574
.775	-.2120	-.3251	-.3658	-.3713	-.2519
.900		-.2425	-.1875	-.1761	-.0779

ARC11-716 (A14 (01+T12+S12)R25 LEFT VERTICAL [illegible]

ALPHA(4) = 4.060 BETA(3) = .040

SECTION (1)LEFT VERTICAL DEPENDENT VARIABLE CP

Z/BV	.1580	.3160	.6000	.8400	.9250
X/CV					
.000	.3520	.2649	.3751	.3438	.3580
.025	-.3455	-.4722	-.3690	-.3478	-.4980
.050	-.1097	-.1760	-.0867	-.1372	-.2271
.150	-.1999	-.1556	-.1100	-.1054	-.1809
.300	-.2108	-.1569	-.3606	-.1827	-.1830
.520	-.2775	-.2735	-.3231	-.3751	-.3960
.685	-.2755	-.4850	-.7389	-.5451	-.3221
.775	-.2251	-.3342	-.4049	-.3223	-.2159
.900		-.2423	.1868	-.1567	-.0892

ALPHA(4) = 4.100 BETA(4) = 4.110

SECTION (1)LEFT VERTICAL DEPENDENT VARIABLE CP

Z/BV	.1580	.3160	.6000	.8400	.9250
X/CV					
.000	.2245	.1792	[illegible]	.0671	.1140
.025	[illegible]	-.8591	[illegible]	-.7521	-.9553
.050	[illegible]	-.9432	[illegible]	-.7229	-.9361
.150	-.1578	[illegible]	[illegible]	-.6611	-.8685
.300	.4424	-.4534	-.6151	-.6837	-.7630
.520	-.3710	[illegible]	-.3674	-.4943	-.3329
.685	-.2799	-.4351	-.7620	-.3132	-.2597
.775	-.2403	-.3179	-.3756	-.2412	-.1468
.900		-.2751	-.1616	-.1525	-.0821

ALPHA(4) = 4.100 BETA(5) = 8.190

SECTION (1)LEFT VERTICAL DEPENDENT VARIABLE CP

Z/BV	.1580	.3160	.6000	.8400	.9250
X/CV					
.000	.0865	-.0737	-.1813	-.2875	-.1317
.025	-.8949	-.9880	-1.1440	-.6827	-.5543
.050	[illegible]	-1.0070	-1.1350	-.6743	-.5577
.150	-.8953	-.9986	-1.1490	-.6658	-.5386
.300	-.4928	-.9052	-1.0340	-.6167	-.5036
.520	-.4686	-.5220	-.8664	-.5470	-.4505
.685	-.3137	-.4455	-.7035	-.4894	-.3939
.775	-.2358	-.3346	-.5393	-.4611	-.3769
.900		-.2551	-.3000	-.4182	-.3570

ARC11-716 IA14 O1+T12+S12N25 LEFT VERTICAL (RB1V44)

ALPHAO(5) = 8.040 BETAO (1) = -8.080

SECTION (1)LEFT VERTICAL DEPENDENT VARIABLE CP

Z/BV	.1580	.3160	.6000	.8400	.9250
X/CV					
.000	.0699	-.1821	-.2545	-.1895	-.2240
.025	.2596	.3076	.3244	.3146	.2314
.050	.2318	.2728	.3123	.2770	.2236
.150	.1376	.1798	.1793	.1975	.0619
.300	.0684	.0876	-.1755	.0412	-.0826
.520	-.0937	-.1342	-.1920	-.2732	-.2286
.685	-.3149	-.4316	-.5003	-.5216	-.5166
.775	-.2114	-.2691	-.2642	-.3400	-.3274
.900		-.2360	-.2037	-.3331	-.2382

ALPHAO(5) = 7.980 BETAO (2) = -4.020

SECTION (1)LEFT VERTICAL DEPENDENT VARIABLE CP

Z/BV	.1580	.3160	.6000	.8400	.9250
X/CV					
.000	.1857	.0937	.1276	.1297	.0620
.025	-.0288	.0803	.2010	.1810	.0427
.050	.0274	.0805	.1866	.1454	.1075
.150	-.0338	.0328	.0712	.0409	-.0391
.300	-.0721	-.0219	-.2436	-.0560	-.1299
.520	-.1684	-.1969	-.2551	-.3110	-.3255
.685	-.2848	-.4621	-.6183	-.6018	-.3973
.775	-.2049	-.3019	-.3186	-.2911	-.2081
.900		-.2323	-.1668	-.0916	-.0324

ALPHAO(5) = 7.970 BETAO (3) = .020

SECTION (1)LEFT VERTICAL DEPENDENT VARIABLE CP

Z/BV	.1580	.3160	.6000	.8400	.9250
X/CV					
.000	.2007	.1965	.3420	.2953	.3051
.025	-.2584	-.3707	-.5885	-.3528	-.4925
.050	-.1395	-.2010	-.1192	-.1459	-.2446
.150	-.1780	-.1595	-.1405	-.1048	-.1745
.300	-.2041	-.1728	-.4171	-.1913	-.1978
.520	-.2928	-.2757	-.3232	-.3793	-.3877
.685	-.2379	-.4296	-.6899	-.5748	-.2870
.775	-.2104	-.2981	-.3954	-.3267	-.1960
.900		-.2390	-.1969	-.1328	-.0516

A5011-716 IA14 [illegible]12*S12125 LEFT VERTICAL [illegible]

ALPHA(5) = 8.020 BETA(4) = 4.130

SECTION (1)LEFT VERTICAL DEPENDENT VARIABLE CP

Z/BV	.1580	.3160	.6000	.8400	.9250
X/CV					
.000	.1704	.0984	.0623	-.0244	.0267
.025	-.4756	-.8474	-.7314	-.7544	-.9421
.050	-.3732	-.8051	-.7274	-.7340	-.9200
.150	-.3524	-.5527	-.6846	-.6911	-.8517
.300	-.4035	-.3514	-.6140	-.7239	-.7610
.520	-.3190	.3251	-.4650	-.5048	-.2677
.685	-.2554	-.4556	-.5684	-.2795	-.1576
.775	-.2419	-.5014	-.5406	-.1529	-.1031
.900		-.2632	-.1821	.1013	-.0465

ALPHA(5) = 8.080 BETA(5) = 8.230

SECTION (1)LEFT VERTICAL DEPENDENT VARIABLE CP

Z/BV	.1580	.3160	.6000	.8400	.9250
X/CV					
.000	.0903	-.1811	-.2357	-.4092	-.1945
.025	-.2401	-1.0611	-.9765	-.6644	-.4981
.050	-.3360	-1.0770	-.9971	-.6545	-.5034
.150	-.4594	[illegible]	-.9757	-.6129	-.4921
.300	-.5916	-.7291	-.9632	-.5762	-.4578
.520	-.5584	.2704	-.5273	-.4964	-.3530
.685	-.2658	-.2909	-.6417	-.4592	-.3645
.775	-.2370	-.2684	-.2809	-.4514	-.3565
.900		-.2513	-.1548	-.4239	-.3607

TABULATED PRESSURE DATA - TA14A - VOL. 7

ATC13-716 TA14 01+T12+S12N25 LEFT VERTICAL (RB1V45) (20 FEB 74)

REFERENCE DATA

SREF = 2.4210 SQ.FT XMRP = 39.5000 INCHES
LT [illegible] INCHES YMRP = [illegible] INCHES
[illegible] = 58.7500 INCHES ZMRP = 0.000 INCHES
SCALE = [illegible] SCALE

PARAMETRIC DATA

MACH = .950 ELEVON = .000
RUDDER = .000 SPOILER = .000

ALPHA (1) = -7.770 BETA (1) = [illegible]

SECTION 1 LEFT VERTICAL DEPENDENT VARIABLE CP

Z/RH	.1580	.5100	.6000	.8450	.9250
X/C					
.000	.2937	.1716	.2105	.2813	.1786
.025	.5503	.5131	.5084	.4643	.349[illegible]
.050	[illegible]	.4668	.4634	.4192	.3784
.150	.3757	.3483	.3135	.3002	.1958
.300	.2641	.2224	.1510	.1441	.0792
.500	.0559	[illegible]	-.0580	-.1560	-.2888
.645	-.3711	[illegible]	-.8982	-.9601	-.1515
.775	-.5110	-.4431	-.9165	-.9816	-.9096
.900		-.2454	-.3704	-.8653	-.8620

ALPHA (1) = -7.770 BETA (1,2) = -4.010

SECTION (1)LEFT VERTICAL DEPENDENT VARIABLE CP

Z/RH	.1580	.5100	.6000	.8450	.9250
X/C					
.000	.4465	.4037	.4445	.4748	[illegible]
.025	.3256	.2755	.3042	.2983	[illegible]
.050	.3299	.2733	[illegible]	.2730	.2451
.150	.2200	.1960	.1821	.1725	.0924
.300	.1183	.1142	.0175	.0652	.0219
.500	-.0571	-.1173	-.1141	-.1979	-.3511
.645	-.3975	-.7716	-.9565	-1.0110	-.0948
.775	-.5110	-.4915	-.9029	-.9454	-.9695
.900		-.3553	-.5776	-.9225	-.4865

[illegible] LEFT VERTICAL [illegible]

ALPHA([illegible]) = -7.760 BETA(5) = .040

SECTION ([illegible]) LEFT VERTICAL DEPENDENT VARIABLE CP

Z/BV	.1580	.3160	.6000	.8400	.9250
X/CV					
.000	.5117	.5003	.5835	.5528	.5593
.025	-.0669	-.2763	-.2948	-.3008	-.4666
.050	.1270	.0036	.0266	-.0428	-.2038
.150	.0258	.0055	-.0276	-.0467	-.0657
.300	-.0553	.0418	-.1419	-.0756	-.0646
.520	-.1569	[illegible]	-.2508	-.2510	-.3375
.695	-.4156	[illegible]	[illegible]	-1.0340	[illegible]
.775	[illegible]	[illegible]	[illegible]	[illegible]	-.9775
.900		[illegible]	-.4272	[illegible]	-.4563

ALPHA([illegible]) = [illegible] BETA([illegible]) = 4.110

SECTION ([illegible]) LEFT VERTICAL DEPENDENT VARIABLE CP

Z/BV	[illegible]	[illegible]	[illegible]	.8400	.9250
X/CV					
[illegible]	[illegible]	[illegible]	[illegible]	.5422	.5979
[illegible]	[illegible]	[illegible]	[illegible]	-1.[illegible]00	-1.2790
[illegible]	[illegible]	[illegible]	[illegible]	[illegible]	[illegible]
[illegible]	[illegible]	[illegible]	[illegible]	[illegible]	[illegible]
[illegible]	-.2555	[illegible]	-.4654	-.5498	[illegible]
[illegible]	-.5482	[illegible]	[illegible]	[illegible]	[illegible]
[illegible]	-.9175	[illegible]	[illegible]	-1.0710	[illegible]
[illegible]	[illegible]	-.5574	-.7747	-.6435	-.6755
[illegible]		-.4684	-.4408	-.4425	-.4011

ALPHA([illegible]) = -7.930 BETA(5) = 8.180

SECTION (11) LEFT VERTICAL DEPENDENT VARIABLE CP

Z/BV	.1580	.3180	.6000	.8400	.9250
X/CV					
.000	.2985	.1792	.1814	.1084	.1955
.025	-.5040	-.5080	-1.0026	-1.1420	-1.3030
.050	-.5479	-.7811	-1.0130	-1.2110	-1.3350
.150	-.5172	-.7380	-.9424	-.9236	-1.1080
.300	-.2615	-.6681	-.8612	-.8457	-.8112
.520	-.4660	-.5474	-.8622	-.6273	-.6065
.695	-.5802	-.7349	-.8526	-.5362	-.5351
.775	-.3005	-.6218	-.7253	-.3917	-.5055
.900		-.5400	-.6328	-.3497	-.4658

ARC11-716 IA14 01+T12+S12N25 LEFT VERTICAL (RB1V45)

ALPHAO (2) = -4.020 BETAO (1) = -8.080

SECTION (1)LEFT VERTICAL DEPENDENT VARIABLE CP

Z/BV	.1580	.3160	.6000	.8400	.9250
X/CV					
.000	.2702	.1331	.1394	.1788	.0832
.025	.4756	.4479	.4459	.4082	.2948
.050	.4335	.4005	.4096	.3648	.3135
.150	.3121	.2900	.2631	.2541	.1459
.300	.2087	.1783	.0836	.1012	.0363
.520	.0012	-.0759	-.0968	-.1825	-.3227
.685	-.3920	-.6624	-.9071	-.9653	-.9577
.775	-.3097	-.4455	-.7217	-.9066	-.9260
.900		-.2612	-.3559	-.7931	-.8647

ALPHAO(2) = -3.960 BETAO (2) = -4.030

SECTION (1)LEFT VERTICAL DEPENDENT VARIABLE CP

Z/BV	.1580	.3160	.6000	.8400	.9250
X/CV					
.000	.3878	.3390	.3684	.3845	.3236
.025	.2255	.1654	.2226	.2382	.0785
.050	.2383	.1814	.2255	.2062	.1893
.150	.1214	.1144	.1159	.1238	.0351
.300	.0369	.0365	-.0231	.0074	-.0282
.520	-.1116	-.1652	-.1669	-.2361	-.3943
.685	-.4099	-.7495	-.9678	-1.0060	-1.0100
.775	-.2955	-.4549	-.9249	-.9701	-.9929
.900		-.3292	-.4743	-.6139	-.4674

ALPHAO(2) = -3.870 BETAO (3) = .010

SECTION (1)LEFT VERTICAL DEPENDENT VARIABLE CP

Z/BV	.1580	.3160	.6000	.8400	.9250
X/CV					
.000	.4453	.4024	.4977	.4599	.4687
.025	-.1693	-.3798	-.3707	-.3752	-.5178
.050	.0561	-.1131	-.0309	-.1212	-.2572
.150	-.0800	-.1262	-.0925	-.0791	-.1325
.300	-.2157	-.1034	-.2160	-.1448	-.1113
.520	-.2056	-.2625	-.2828	-.2963	-.3817
.685	-.4247	-.7368	-1.0180	-1.0110	-.9599
.775	-.2942	-.4919	-.9806	-.6992	-.6677
.900		-.4095	-.5134	-.4515	-.2798

ARC11-716 IA14 O1+T12+S12N25 LEFT VERTICAL (RB1V45)

ALPHAO(2) = -3.940 BETAO (4) = 4.090

SECTION (1)LEFT VERTICAL DEPENDENT VARIABLE CP

Z/BV	.1580	.3160	.6000	.8400	.9250
X/CV					
.000	.3878	.3524	.3324	.2492	.3068
.025	-.3968	-.6816	-.8325	-.9826	-1.1890
.050	-.4140	-.6466	-.8325	-.9875	-1.2180
.150	-.1684	-.3895	-.7072	-.7131	-.7503
.300	-.3153	-.3632	-.4988	-.5907	-.5469
.520	-.4143	-.3981	-.4034	-.5507	-.4863
.685	-.5209	-.6180	-.9718	-.7289	-.6223
.775	-.3038	-.5757	-.5834	-.5090	-.4256
.900		-.4464	-.4016	-.4142	-.3269

ALPHAO(2) = -3.950 BETAO (5) = 8.170

SECTION (1)LEFT VERTICAL DEPENDENT VARIABLE CP

Z/BV	.1580	.3160	.6000	.8400	.9250
X/CV					
.000	.2625	.1337	.1030	.0140	.1033
.025	-.5128	-.8212	-1.0330	-1.1100	-.8960
.050	-.5499	-.8014	-1.0410	-1.1690	-1.0730
.150	-.6324	-.7827	-.9829	-1.0040	-.8572
.300	-.3088	-.7112	-.9000	-.8830	-.8500
.520	-.5200	-.5775	-.8838	-.6780	-.6938
.685	-.5158	-.7108	-.8606	-.5740	-.6035
.775	-.3125	-.5808	-.7552	-.4893	-.5737
.900		-.4504	-.6516	-.5312	-.5000

ALPHAO(3) = -.300 BETAO (1) = -8.100

SECTION (1)LEFT VERTICAL DEPENDENT VARIABLE CP

Z/BV	.1580	.3160	.6000	.8400	.9250
X/CV					
.000	.2283	.0896	.0616	.0656	-.0325
.025	.4261	.3938	.4005	.3612	.2596
.050	.3806	.3508	.3706	.3197	.2726
.150	.2574	.2523	.2284	.2205	.1140
.300	.1697	.1487	.0555	.0650	-.0097
.520	-.0227	-.0959	-.1222	-.2252	-.3430
.685	-.3864	-.6791	-.9021	-.9940	-.9591
.775	-.3103	-.4089	-.5587	-.9321	-.9284
.900		-.2582	-.3211	-.6409	-.6471

ARC11-71F IA14 01+T12+S12N25 LEFT VERTICAL (RB1V45)

ALPHAO (3) = -.320 BETAO (2) = -4.030

SECTION 1)LEFT VERTICAL DEPENDENT VARIABLE CP

Z/BV	.1580	.3160	.6000	.8400	.9250
X/CV					
.000	.3275	.2506	.2839	.2319	.2298
.025	.1624	.0957	.1850	.2038	.0596
.050	.1774	.1086	.1784	.1778	.1608
.150	.0371	.0482	.0741	.1013	.0034
.300	-.0339	-.0166	-.0415	-.0215	-.0598
.520	-.1501	-.1938	-.2054	-.2500	-.4341
.685	-.4175	-.6960	-.9796	-.9873	-1.0030
.775	-.2937	-.4171	-.7671	-.9457	-.8175
.900		-.3037	-.4064	-.4613	-.3837

ALPHAO(3) = -.330 BETAO (3) = .040

SECTION (1)LEFT VERTICAL DEPENDENT VARIABLE CP

Z/BV	.1580	.3160	.6000	.8400	.9250
X/CV					
.000	.3964	.3228	.4252	.3709	.3955
.025	-.2178	-.4159	-.3742	-.3695	-.4236
.050	.0103	-.1599	-.0593	-.1343	-.2497
.150	-.1075	-.2286	-.1292	-.0942	-.1550
.300	-.2739	-.1872	-.2405	-.1749	-.1494
.520	-.2653	-.2918	-.3133	-.3203	-.4155
.685	-.4228	-.6874	-1.0300	-.7868	-.9343
.775	-.2902	-.4719	-.7616	-.6406	-.5251
.900		-.3807	-.4364	-.4721	-.2661

ALPHAO(3) = -.330 BETAO (4) = 4.090

SECTION (1)LEFT VERTICAL DEPENDENT VARIABLE CP

Z/BV	.1580	.3160	.6000	.8400	.9250
X/CV					
.000	.3367	.2953	.2653	.1747	.2295
.025	-.4344	-.6872	-.8663	-.9973	-1.1400
.050	-.4303	-.6783	-.8572	-1.0190	-1.1620
.150	-.2262	-.4110	-.7176	-.7181	-.7528
.300	-.3637	-.4081	-.4973	-.5932	-.5952
.520	-.4700	-.4290	-.4049	-.5605	-.4854
.685	-.3981	-.5991	-.7354	-.6574	-.5888
.775	-.3165	-.5198	-.5706	-.4729	-.4898
.900		-.3716	-.4038	-.3746	-.3478

ARC11-716 IA14 O1+T12+S12N25 LEFT VERTICAL (RB1V45)

ALPHAO(3) = -.330 BETAO (5) = 8.160

SECTION (1)LEFT VERTICAL DEPENDENT VARIABLE CP

Z/BV	.1580	.3160	.6000	.8400	.9250
X/CV					
.000	.2213	.1088	.0267	-.0775	.0149
.025	-.5130	-.8244	-1.0630	-.9977	-.8529
.050	-.5544	-.8154	-1.0670	-1.0210	-.8202
.150	-.6753	-.8148	-1.0160	-.9673	-.8451
.300	-.3466	-.7248	-.9347	-.8635	-.7680
.520	-.3691	-.5855	-.8925	-.7112	-.6795
.685	-.4127	-.6932	-.8457	-.6407	-.5864
.775	-.3140	-.5273	-.7494	-.6126	-.5393
.900		-.4040	-.6091	-.5858	-.4930

ALPHAO(4) = 4.170 BETAO (1) = -8.100

SECTION (1)LEFT VERTICAL DEPENDENT VARIABLE CP

Z/BV	.1580	.3160	.6000	.8400	.9250
X/CV					
.000	.1682	.0561	-.0307	-.0448	-.1345
.025	.3254	.3330	.3411	.3086	.2256
.050	.2973	.2920	.3156	.2707	.2293
.150	.1956	.2032	.1758	.1889	.0658
.300	.1243	.1117	.0158	.0316	-.0553
.520	-.0548	-.1209	-.1620	-.2461	-.3635
.685	-.3712	-.6289	-.8941	-.9636	-.9580
.775	-.2868	-.4051	-.4046	-.7750	-.8412
.900		-.2548	-.3035	-.4942	-.3982

ALPHAO(4) = 1.230 BETAO (2) = -4.030

SECTION (1)LEFT VERTICAL DEPENDENT VARIABLE CP

Z/BV	.1580	.3160	.6000	.8400	.9250
X/CV					
.000	.2963	.1622	.2001	.1957	.1485
.025	.0908	-.0348	.0499	.1335	.0008
.050	.1086	-.0200	.0626	.1139	.1036
.150	-.0486	-.0456	-.0312	.0521	-.0443
.300	-.1513	-.0977	-.1088	-.0660	-.0940
.520	-.2237	-.2564	-.2349	-.2849	-.4153
.685	-.4483	-.6909	-.9643	-.9787	-.5723
.775	-.3023	-.3978	-.5638	-.7739	-.5407
.900		-.2939	-.3310	-.3924	-.4610

ARC11-716 TA14 01+T12+S12N23 LEFT VERTICAL (RB1V45)

ALPHAO(2) = 4.150 BETAO (3) = .010

SECTION (1)LEFT VERTICAL DEPENDENT VARIABLE CP

Z/BV	.1580	.3160	.6000	.8400	.9250
X/CV					
.000	.3715	.2668	.3085	.2695	.2973
.025	-.2790	-.4803	-.4995	-.4355	-.5425
.050	-.0491	-.2172	-.1881	-.2053	-.3457
.150	-.1639	-.2828	-.2116	-.1228	-.2364
.300	-.3195	-.2852	-.3048	-.2273	-.2105
.520	-.3700	-.3417	-.3553	-.3700	-.4279
.685	-.3640	-.5606	-.9805	-.4907	-.3367
.775	-.2868	-.4717	-.5522	-.3982	-.2559
.900		-.3477	-.2949	-.2776	-.1366

ALPHAO(4) = 4.140 BETAO (4) = 4.110

SECTION (1)LEFT VERTICAL DEPENDENT VARIABLE CP

Z/BV	.1580	.3160	.6000	.8400	.9250
X/CV					
.000	.2965	.2181	.1765	.0742	.1266
.025	-.5034	-.7364	-.9172	-.8958	-.8488
.050	-.4523	-.7403	-.9134	-.8907	-.8499
.150	-.2958	-.4781	-.7547	-.7833	-.8130
.300	-.4235	-.4816	-.5215	-.6985	-.8091
.520	-.4641	-.4036	-.4097	-.5705	-.5566
.685	-.3418	-.5353	-.7695	-.4044	-.3868
.775	-.2836	-.4105	-.4955	-.3324	-.3126
.900		-.3384	-.3714	-.2495	-.2390

ALPHAO(5) = 8.150 BETAO (1) = -8.090

SECTION (1)LEFT VERTICAL DEPENDENT VARIABLE CP

Z/BV	.1580	.3160	.6000	.8400	.9250
X/CV					
.000	.1193	-.0162	-.1104	-.1474	-.2320
.025	.2420	.2666	.3081	.2723	.2059
.050	.2198	.2520	.2811	.2364	.2009
.150	.1256	.1689	.1522	.1674	.0461
.300	.0702	.0859	-.0078	.0299	-.0778
.520	-.0712	-.1187	-.1747	-.2517	-.3595
.685	-.3741	-.6230	-.7160	-.9114	-.8972
.775	-.2720	-.3783	-.3687	-.5610	-.6025
.900		-.2493	-.2942	-.4136	-.3568

ARC11-716 IA14 O1+T12+S12N25 LEFT VERTICAL (RB1V45)

ALPHAO(5) = 8.150 BETAO (2) = -4.030

SECTION (1)LEFT VERTICAL DEPENDENT VARIABLE CP

Z/BV	.1580	.3160	.6000	.8400	.9250
X/CV					
.000	.2288	.1244	.1547	.1027	.0228
.025	-.1381	-.1181	.0697	.1534	.0360
.050	-.0542	-.0884	.0868	.1159	.0976
.150	-.1508	-.1033	.0025	.0665	-.0416
.300	-.2358	-.1097	-.0769	-.0595	-.1108
.520	-.2453	-.2073	-.2274	-.2936	-.3525
.685	-.3505	-.5847	-.8947	-.8518	-.5383
.775	-.2546	-.3728	-.4498	-.7028	-.4592
.900		-.2717	-.2752	-.2909	-.2406

ALPHAO(5) = 8.140 BETAO (3) = .040

SECTION (1)LEFT VERTICAL DEPENDENT VARIABLE CP

Z/BV	.1580	.3160	.6000	.8400	.9250
X/CV					
.000	.3017	.2111	.2133	.1892	.2501
.025	-.2904	-.5222	-.5865	-.4701	-.5492
.050	-.1085	-.2738	-.2980	-.2453	-.3214
.150	-.2070	-.3240	-.2792	-.1615	-.1490
.300	-.3482	-.3505	-.3240	-.1913	-.1582
.520	-.3941	-.3609	-.3441	-.3400	-.3591
.685	-.3120	-.4711	-.6267	-.5586	-.2867
.775	-.2605	-.3927	-.3903	-.2898	-.1752
.900		-.2945	-.2505	-.1552	-.0623

ALPHAO(5) = 8.140 BETAO (4) = 4.150

SECTION (1)LEFT VERTICAL DEPENDENT VARIABLE CP

Z/BV	.1580	.3160	.6000	.8400	.9250
X/CV					
.000	.2214	.1557	.1134	-.0187	.0288
.025	-.3343	-.7734	-.9133	-.8894	-.8367
.050	-.2086	-.7350	-.9150	-.8695	-.8297
.150	-.2090	-.4754	-.7948	-.7936	-.8623
.300	-.4353	-.4841	-.5637	-.7574	-.8098
.520	-.4849	-.4258	-.4234	-.5835	-.5072
.685	-.3483	-.4930	-.6550	-.3541	-.3158
.775	-.2744	-.3780	-.4238	-.2980	-.2579
.900		-.3054	-.3390	-.2062	-.1891

ARC11-716 TA14 01+T12+S12N25 LEFT VERTICAL (RB1V45)

ALPHA(5) = 8.120 DETAO (5) = 8.270

SECTION (1)LEFT VERTICAL DEPENDENT VARIABLE CP

Z/BV	.1580	.3160	.6000	.8400	.9250
X/CV					
.000	.8[illegible]	-.0166	-.1543	-.3401	-.2223
.025	-.5548	-.9058	-1.0[illegible]0	-.8867	-.6606
.050	-.5187	-.9272	-1.0620	-.8843	-.6777
.150	-.3685	-.8867	-1.0410	-.8125	-.6674
.300	-.5350	-.6231	-.9622	-.7333	-.6262
.520	-.4738	-.3982	-.8934	-.6490	-.5880
.685	-.3149	-.3637	-.6856	-.5935	-.5116
.775	-.2923	-.3274	-.5039	-.5973	-.4949
.900		-.2963	-.2733	-.5124	-.4691

ORIGINAL PAGE IS OF POOR QUALITY

ARC11-716 IA14 C8+T12+S12N25 LEFT VERTICAL (RB1V46) (15 FEB 74)

REFERENCE DATA

SREF = 2.4210 SQ.FT. XMRP = 29.5800 INCHES
LREF = 38.7090 INCHES YMRP = .0000 INCHES
BREF = 38.7090 INCHES ZMRP = .0000 INCHES
SCALE = .0300 SCALE

PARAMETRIC DATA

MACH = .975 ELEVON = .000
RUDDER = .000 SPDBRK = .000

ALPHAO(1) = -7.970 BETAO (1) = -8.050

SECTION (1)LEFT VERTICAL DEPENDENT VARIABLE CP

Z/BV	.1580	.3160	.6000	.8400	.9250
X/CV					
.000	.3474	.2295	.2567	.3174	.2166
.025	.5750	.5392	.5291	.4844	.3652
.050	.5283	.4897	.4891	.4404	.3926
.150	.4056	.3741	.3415	.3206	.2220
.300	.2911	.2528	.2107	.1704	.1104
.520	.0727	-.0105	-.0225	-.1133	-.2632
.685	-.4055	-.7110	-.8463	-.8913	-.8968
.775	-.3433	-.4424	-.7830	-.8400	-.8621
.900		-.3730	-.5425	-.8157	-.8246

ALPHAO(1) = -7.960 BETAO (2) = -4.020

SECTION (1)LEFT VERTICAL DEPENDENT VARIABLE CP

Z/BV	.1580	.3160	.6000	.8400	.9250
X/CV					
.000	.4878	.4415	.4737	.5089	.4455
.025	.3938	.3004	.3206	.3126	.1563
.050	.3599	.3039	.3227	.2940	.2663
.150	.2474	.2258	.2054	.1969	.1215
.300	.1509	.1395	.1020	.0872	.0534
.520	-.0199	-.0776	-.0738	-.1662	-.3057
.685	-.4237	-.7951	-.8869	-.9635	-.9368
.775	-.3434	-.5098	-.8407	-.9041	-.9156
.900		-.4164	-.7824	-.9079	-.8608

AF011-716 TA14 01+712+51[illegible]25 LEFT VERTICAL (RB1 X46)

ALPHAO(1) = -7.890 BETAO (3) = .030

SECTION (1)LEFT VERTICAL DEPENDENT VARIABLE CP

Z/BV	.1580	.3160	.6000	.8400	.9250
X/CV					
.000	.5365	.5174	.5945	.5679	.5722
.025	-.0648	-.2552	-.2845	-.3000	-.4325
.050	.1542	.0206	.0249	-.0420	-.2219
.150	.0517	.0152	-.0051	-.0252	-.0532
.300	-.0[illegible]	-.0140	-.0667	-.0598	-.0460
.520	-.1[illegible]03	-.1868	-.2060	-.2159	-.3022
.685	-.4[illegible]38	-.8533	-.9462	-.9762	-.9301
.775	-.3235	-.5417	-.9149	-.9470	-.9400
.900		-.4230	-.5894	-.5833	-.6081

ALPHAO(1) = -7.950 BETAO (4) = 4.100

SECTION (1)LEFT VERTICAL DEPENDENT VARIABLE CP

Z/BV	.1580	.3160	.6000	.8400	.9250
X/CV					
.000	.4873	.4507	.4494	.3756	.4323
.025	-.2712	-.6350	-.7262	-.9681	-1.1890
.050	-.3205	-.5060	-.7379	-.9477	-1.1240
.150	-.0683	-.3321	-.6272	-.6288	-.9087
.300	-.2043	-.2622	-.4002	-.4832	-.3581
.520	-.2900	-.2976	-.3201	-.4423	-.3530
.685	-.5032	-.8361	-.9105	-.9916	-.9564
.775	-.3821	-.5836	-.9152	-.9132	-.9452
.900		-.5189	-.5313	-.6338	-.6597

ALPHAO(1) = -7.990 BETAO (5) = 8.190

SECTION (1)LEFT VERTICAL DEPENDENT VARIABLE CP

Z/BV	.1580	.3160	.6000	.8400	.9250
X/CV					
.000	.3542	.2175	.2188	.1416	.2231
.025	-.4546	-.7581	-.9401	-1.0800	-1.2320
.050	-.4991	-.7347	-.9515	-1.1550	-1.2640
.150	-.5766	-.6870	-.8892	-.8727	-1.1130
.300	-.2262	-.6141	-.8074	-.8326	.7886
.520	-.4177	-.5128	-.8097	-.7090	-.6347
.685	-.6450	-.7522	-.8979	-.7246	-.6833
.775	-.5557	-.6577	-.7608	-.5224	-.5486
.900		-.5928	-.5440	-.4305	-.5427

ARC11-716 IA14 O1+T12+S12N25 LEFT VERTICAL (RB1V46)

ALPHAO(2) = -3.920 BETAO (1) = -8.060

SECTION (1)LEFT VERTICAL DEPENDENT VARIABLE CP

Z/BV	.1580	.3160	.6000	.8400	.9250
X/CV					
.000	.3055	.1762	.1793	.2082	.1103
.025	.4972	.4649	.4659	.4242	.3082
.050	.4605	.4216	.4307	.3830	.3321
.150	.3353	.3143	.2870	.2751	.1684
.300	.2317	.2038	.1648	.1255	.0593
.520	.0348	-.0434	-.0655	-.1530	-.3096
.685	-.4150	-.6770	-.8597	-.9092	-.9118
.775	-.3403	-.4558	-.7995	-.8602	-.8828
.900		-.3340	-.4144	-.8298	-.8512

ALPHAO(2) = -3.920 BETAO (2) = -4.010

SECTION (1)LEFT VERTICAL DEPENDENT VARIABLE CP

Z/BV	.1580	.3160	.6000	.8400	.9250
X/CV					
.000	.4269	.3755	.4090	.4174	.3508
.025	.2731	.1999	.2549	.2661	.1149
.050	.2857	.2193	.2568	.2386	.2180
.150	.1605	.1516	.1497	.1573	.0742
.300	.0764	.0742	.0536	.0439	.0126
.520	-.0674	-.1208	-.1297	-.1866	-.3482
.685	-.4270	-.7820	-.8992	-.9330	-.9513
.775	-.3327	-.5117	-.8608	-.8988	-.9327
.900		-.4077	-.6702	-.9026	-.8749

ALPHAO(2) = -3.850 BETAO (3) = .020

SECTION (1)LEFT VERTICAL DEPENDENT VARIABLE CP

Z/BV	.1580	.3160	.6000	.8400	.9250
X/CV					
.000	.4795	.4241	.5120	.4744	.4891
.025	-.1245	-.3334	-.3185	-.3281	-.4533
.050	.0953	-.0758	-.0132	-.1002	-.2313
.150	-.0200	-.1201	-.0556	-.0436	-.0986
.300	-.1803	-.0669	-.1332	-.1105	-.0811
.520	-.1681	-.2241	-.2455	-.2503	-.3432
.685	-.4343	-.7895	-.9596	-.9949	-.9536
.775	-.3150	-.5253	-.9539	-.9643	-.9604
.900		-.4226	-.5386	-.5334	-.4640

ARC11-716 IA14 OL+T12+S12N25 LEFT VERTICAL (RB1V46)

ORIGINAL PAGE IS OF POOR QUALITY

ALPHA(6) = -3.870 BETA(4) = 4.100

SECTION (1)LEFT VERTICAL DEPENDENT VARIABLE CP

X/CV \ Z/BV	.1580	.3160	.6000	.8400	.9250
.000	.4284	.3901	.3753	.2898	.3439
.025	-.3562	.5181	-.7759	-.9947	-1.1767
.050	-.3547	-.5784	-.7782	-.9811	-1.1345
.150	-.1225	-.3384	-.6516	-.6447	-.7802
.300	-.2666	-.3136	-.4185	-.4897	-.3869
.520	-.3629	-.3495	-.3547	-.4652	-.5878
.685	-.5326	-.7354	-.9739	-.9836	-.9102
.775	-.5367	-.5575	-.9066	-.8833	-.9393
.900		-.4939	-.4803	-.5398	-.5170

ALPHA(2) = -3.990 BETA(5) = 8.160

SECTION (1)LEFT VERTICAL DEPENDENT VARIABLE CP

X/CV \ Z/B	.1580	.3160	.6000	.8400	.9250
.000	.3010	.1804	.1496	.0515	.1397
.025	-.4529	-.7661	-.9625	-1.0760	-1.1990
.050	-.4993	-.7467	-.9741	-1.1230	-1.2490
.150	-.5885	-.7224	-.9206	-.9494	-1.0130
.300	-.2658	-.6438	-.8360	-.8759	-.8190
.520	-.4745	-.5319	-.8227	-.7128	-.6348
.685	-.6313	-.7207	-.9829	-.6052	-.5870
.775	-.3365	-.6406	-.7591	-.5347	-.5[illegible]
.900		-.5484	-.6641	-.5188	-.5149

ALPHA(3) = -.300 BETA(1) = -8.100

SECTION (1)LEFT VERTICAL DEPENDENT VARIABLE CP

X/CV \ Z/BV	.1580	.3160	.6000	.8400	.9250
.000	.2660	.1308	.1092	.1166	.0248
.025	.4366	.4074	.4141	.3806	.2795
.050	.4011	.3695	.3848	.3395	.2948
.150	.2743	.2720	.2445	.2404	.1325
.300	.1852	.1724	.1152	.0958	.0214
.520	.0045	-.0627	-.0855	-.1744	-.3500
.685	-.4010	-.6852	-.8492	-.9065	-.9145
.775	-.3240	-.4805	-.7826	-.8598	-.8828
.900		-.3398	-.3681	-.8221	-.7410

ARC11-716 IA14 OL+T12+S12NB5 LEFT VERTICAL (RB1V46)

ALPHAO(3) = -.320 BETAO (2) = -4.030

SECTION (1)LEFT VERTICAL DEPENDENT VARIABLE CP

Z/BV	.1580	.3160	.6000	.8400	.9250
X/CV					
.000	.3731	.3015	.3187	.3223	.2583
.025	.2118	.1310	.1776	.2019	.0710
.050	.2227	.1424	.1856	.1782	.1723
.150	.0762	.0848	.0786	.1105	.0230
.300	.0069	.0160	-.0175	-.0046	-.0300
.520	-.1178	-.1723	-.1851	-.2181	-.3904
.685	-.4410	-.8093	-.9139	-.9388	-.9697
.775	-.3292	-.4574	-.8788	-.9129	-.9562
.900		-.3426	-.9077	-.9168	-.7630

ALPHAO(3) = -.330 BETAO (3) = .040

SECTION (1)LEFT VERTICAL DEPENDENT VARIABLE CP

Z/BV	.1580	.3160	.6000	.8400	.9250
X/CV					
.000	.4454	.3604	.4357	.4030	.4183
.025	-.1723	-.3644	-.3538	-.3472	-.4772
.050	.0563	-.1182	-.0723	-.1433	-.2818
.150	-.0600	-.1841	-.0974	-.0650	-.1388
.300	-.2278	-.1767	-.1732	-.1463	-.1181
.520	-.2405	-.2516	-.2784	-.2824	-.3735
.685	-.4486	-.7391	-.9660	-1.0050	-.9720
.775	-.3146	-.5021	-.9405	-.9733	-.9727
.900		-.4384	-.5359	-.5312	-.4691

ALPHAO(3) = -.330 BETAO (4) = 4.080

SECTION (1)LEFT VERTICAL DEPENDENT VARIABLE CP

Z/BV	.1580	.3160	.6000	.8400	.9250
X/CV					
.000	.3691	.3255	.2998	.2090	.2498
.025	-.3811	-.6419	-.8305	-1.1020	-1.1840
.050	-.3995	-.6256	-.8525	-1.0920	-1.1630
.150	-.1881	-.3605	-.6520	-.6829	-1.0090
.300	-.3214	-.3697	-.4667	-.4875	-.4156
.520	-.4305	-.4065	-.3988	-.4794	-.3973
.685	-.5285	-.6336	-.9484	-.9949	-.9298
.775	-.3131	-.5811	-.6806	-.7018	-.6803
.900		-.4399	-.4459	-.5006	-.4148

ARTICLE TIE IA14 OLT12-S12X63 SFT VERTICAL (RB1/45)

ALPHA ([illegible]) = [illegible] .550 BETA (5) = 6.160

SECTION (1) SFT VERTICAL DEPENDENT VARIABLE [illegible]

Z/BW	.1580	.3160	.6000	.8400	.9250
X/CW					
[illegible]	.2517	.1473	.0611	[illegible] .396	.43[illegible]
[illegible]	-.4770	-.7134	-.9954	[illegible]	[illegible]
[illegible]	-.9165	-.7693	[illegible]	[illegible]	[illegible]
[illegible]	.64[illegible]	.7589	[illegible]	[illegible]	[illegible]
.560	.5047	-.6716	[illegible]	[illegible]	[illegible]
.520	[illegible]	-.5677	-.6429	[illegible]	[illegible]
.695	[illegible]	-.7093	-.8752	[illegible]	[illegible]
.775	.5267	-.6223	-.7698	-.8295	-.6243
.900		-.4481	-.6740	-.5240	-.5653

ALPHA (4) = 4.100 BETA (1) = 6.100

SECTION (1) LEFT VERTICAL DEPENDENT VARIABLE CP

Z/BW	.1580	.3160	.6000	.8400	.9250
X/CW					
.000	.1918	.0797	[illegible]	.0115	-.0945
.025	.3417	.3255	.3543	.3178	.2287
.050	.3024	.2893	.3253	.2780	.2439
.150	.1823	.1993	.1943	.1946	[illegible]
.500	.1165	.1221	[illegible]	.0540	-.0256
.520	-.0261	[illegible]	-.1279	[illegible]	-.5775
.695	-.3968	-.6888	-.8427	-.9371	[illegible]
.775	-.5202	-.4551	-.7455	-.8650	[illegible]
.900		-.2950	.3402	-.6769	-.8066

ALPHA (4) = 4.090 BETA (2) = -4.040

SECTION (1) SFT VERTICAL DEPENDENT VARIABLE CP

Z/BW	.1580	.3160	.6000	.8400	.9250
X/CW					
.000	.3278	.2174	.2423	.2070	.1607
.025	.1299	-.0139	.0897	.1069	-.0080
.050	.1447	.0171	.1006	.0828	.0932
.150	-.0091	-.0112	-.0061	.0246	-.0565
.500	-.1127	-.0617	-.0807	-.0512	-.0821
.520	-.1061	-.2237	-.2595	-.2501	-.4258
.695	-.4546	-.7813	-.9504	-.9397	-.9761
.775	-.5319	-.4982	-.8663	-.9154	-.9679
.900		-.3326	-.4240	-.7120	-.5006

ARC11-716 IA14 O1+T12+S12N25 LEFT VERTICAL (RB1V46)

ALPHAO(4) = 4.090 BETAO (5) = .030

SECTION (1)LEFT VERTICAL DEPENDENT VARIABLE CP

Z/BV	.1580	.3160	.6000	.8400	.9250
X/CV					
.000	.3955	.2784	.3107	.2915	.3192
.025	-.2464	-.4208	-.4978	-.4048	-.3058
.050	-.0061	-.1628	-.2151	-.2065	-.3904
.150	-.1250	-.2559	-.1841	-.1163	-.2080
.300	-.2902	-.2780	-.2284	-.2007	-.1758
.520	-.3500	-.5184	-.3306	-.3260	-.4136
.685	-.4680	.6418	-.9902	-1.0070	-1.0010
.775	-.2982	-.4807	-.7728	-.7802	-.6699
.900		-.4148	-.4723	-.5610	-.3821

ALPHAO(4) = 4.070 BETAO (4) = 4.120

SECTION (1)LEFT VERTICAL DEPENDENT VARIABLE CP

Z/BV	.1580	.3160	.6000	.8400	.9250
X/CV					
.010	.3259	.2527	.2164	.1139	.1588
.025	-.4188	-.6605	-.8775	-1.1230	-1.1720
.050	-.4171	-.6720	-.8966	-1.1160	-1.1580
.150	-.2492	-.4277	-.6724	-.6987	-1.0090
.300	-.3607	-.4755	-.5145	-.5338	-.4785
.520	-.5011	-.4632	-.4353	-.4941	-.4210
.685	-.3942	-.5777	-.8648	-.8846	-.8708
.775	-.3094	-.5225	-.5655	-.5965	-.5696
.910		-.3959	-.4443	-.4664	-.3937

ALPHAO(4) = 4.080 BETAO (5) = 8.200

SECTION (1)LEFT VERTICAL DEPENDENT VARIABLE CP

Z/BV	.1580	.3160	.6000	.8400	.9250
X/CV					
.000	.1092	.0820	.0000	-.1532	-.0639
.025	-.5903	-.7717	-1.0240	-1.0670	-1.0110
.050	-.5700	-.7910	-1.0270	-1.0680	-1.0290
.150	-.6097	-.7776	-.9875	-.9828	-1.0250
.300	-.3674	-.6938	-.8980	-.9247	-.9177
.520	-.3548	-.5776	-.8472	-.7405	-.8027
.685	-.3778	-.6829	-.8702	-.6570	-.6935
.775	-.3241	-.5065	-.7855	-.5990	-.6494
.900		-.3637	-.6400	-.6280	-.6222

ARC11-716 IA14 OL+T12+S12N25 LEFT VERTICAL (RB1V46)

ALPHAO(5) = 8.040 BETAO (1) = -8.080

SECTION (1)LEFT VERTICAL DEPENDENT VARIABLE CP

X/CV \ Z/BV	.1580	.3160	.6000	.8400	.9250
.000	.1531	.0115	-.0530	-.0984	-.2023
.025	.2429	.2535	.2971	.2647	.1886
.050	.2126	.2170	.2756	.2289	.1923
.150	.0877	.1428	.1522	.1540	.0426
.300	.0406	.0784	.0499	.0165	-.0631
.520	-.0755	-.1046	-.1653	-.2390	-.3949
.685	-.4036	-.6949	-.8565	-.8968	-.9195
.775	-.3060	-.4246	-.5265	-.8390	-.8853
.900		-.2738	-.3132	-.4757	-.4359

ALPHAO(5) = 7.920 BETAO (2) = -4.020

SECTION (1)LEFT VERTICAL DEPENDENT VARIABLE CP

X/CV \ Z/BV	.1580	.3160	.6000	.8400	.9250
.000	.3400	.1627	.1701	.1220	.0529
.025	-.0316	-.0860	.0227	.1001	-.0075
.050	.0421	-.0637	.0384	.0766	.0706
.150	-.0845	-.1214	-.0477	.0248	-.0670
.300	-.2191	-.1289	-.0943	-.0731	-.1208
.520	-.2539	-.2406	-.2288	-.2907	-.4464
.685	-.4715	-.6893	-.9243	-.9494	-.9459
.775	-.3328	-.4182	-.6278	-.9413	-.8182
.900		-.3068	-.3846	-.4845	-.4755

ALPHAO(5) = 7.910 BETAO (3) = .080

SECTION (1)LEFT VERTICAL DEPENDENT VARIABLE CP

X/CV \ Z/BV	.1580	.3160	.6000	.8400	.9250
.000	.3650	.2411	.2307	.2026	.2324
.025	-.2985	-.4753	-.5895	-.4931	-.5408
.050	-.0526	-.2306	-.3173	-.2448	-.3970
.150	-.1668	-.3020	-.2767	-.1827	-.26[illegible]
.300	-.3339	-.3447	-.2836	-.2504	-.2329
.520	-.3979	-.3689	-.3714	-.3614	-.4539
.685	-.4272	-.5375	-.9666	-.7898	-.8404
.775	-.2976	-.5093	-.5852	-.6406	-.3775
.900		-.4080	-.3733	-.4399	-.2624

ARC11-716 IA14 O1+T12+S12N25 LEFT VERTICAL (RB1V46)

ALPHAO(5) = 8.040 BETAO (4) = 4.150

SECTION (1)LEFT VERTICAL DEPENDENT VARIABLE CP

Z/BV	.1580	.3160	.6000	.8400	.9250
X/CV					
.000	.3366	.1911	.1350	-.0036	.0517
.025	-.4071	-.7125	-.9050	-1.0090	-.9799
.050	-.2245	-.7237	-.9256	-.9634	-1.0070
.150	-.2468	-.4524	-.7177	-.7684	-.9344
.300	-.4194	-.4789	-.5366	-.6854	-.8392
.520	-.5153	-.4568	-.4431	-.5730	-.4756
.685	-.3762	-.5285	-.7363	-.5897	-.4155
.775	-.2941	-.4212	-.5154	-.4523	-.3732
.900		-.3146	-.4412	-.3940	-.2758

ALPHAO(5) = 8.030 BETAO (5) = 8.220

SECTION (1)LEFT VERTICAL DEPENDENT VARIABLE CP

Z/BV	.1580	.3160	.6000	.8400	.9250
X/CV					
.000	.1239	.0333	-.0929	-.2812	-.1969
.025	-.5754	-.8202	-1.0410	-.9362	-.8200
.050	-.6103	-.8520	-1.0420	-.9788	-.8340
.150	-.3218	-.8321	-1.0100	-.9819	-.8401
.300	-.4988	-.6397	-.9200	-.9399	-.7760
.520	-.5581	-.4842	-.8473	-.8087	-.6949
.685	-.3414	-.4493	-.8465	-.7430	-.6663
.775	-.3138	-.3599	-.6685	-.7635	-.6308
.900		-.3012	-.4596	-.7355	-.5904

ARC11-716 IA14 O1+T12+S12N25 LEFT VERTICAL (RB1V47) (15 FEB 74)

REFERENCE DATA

SREF = 2.4210 SQ.FT. XMRP = 29.5800 INCHES
LREF = 38.7090 INCHES YMRP = .0000 INCHES
BREF = 38.7090 INCHES ZMRP = .0000 INCHES
SCALE = .0300 SCALE

PARAMETRIC DATA

MACH = 1.050 ELEVON = .000
RUDDER = .000 SPDBRK = .000

ALPHAO(1) = -7.960 BETAO (1) = -8.070

SECTION (1)LEFT VERTICAL DEPENDENT VARIABLE CP

Z/BV	.1580	.3160	.6000	.8400	.9250
X/CV					
.000	.4214	.3057	.3412	.3975	.3126
.025	.6406	.6063	.5951	.5590	.4766
.050	.5989	.5555	.5567	.5201	.4804
.150	.4751	.4498	.4188	.4065	.3126
.300	.3660	.3396	.2896	.2654	.2085
.520	.1631	.0924	.0831	.0017	-.1583
.685	-.4108	-.6660	-.6866	-.7245	-.7391
.775	-.3314	-.4020	-.6278	-.6786	-.7099
.900		-.3500	-.5490	-.6597	-.6737

ALPHAO(1) = -7.960 BETAO (2) = -4.010

SECTION (1)LEFT VERTICAL DEPENDENT VARIABLE CP

Z/BV	.1580	.3160	.6000	.8400	.9250
X/CV					
.000	.5518	.5038	.5497	.5703	.5163
.025	.4205	.3573	.3834	.3797	.2549
.050	.4211	.3608	.3792	.3617	.3357
.150	.3089	.2857	.2754	.2760	.2071
.300	.2167	.2082	.1758	.1813	.1471
.520	.0667	.0113	.0024	-.0470	-.1810
.685	-.4157	-.7531	-.7404	-.7813	-.7760
.775	-.3372	-.5050	-.7019	-.7300	-.7685
.900		-.3800	-.6620	-.7377	-.7277

ARC11-718 IA14 O1+T12+S12N25 LEFT VERTICAL (RB1V47)

ALPHAO(1) = -7.960 BETAO (3) = .030

SECTION (1)LEFT VERTICAL DEPENDENT VARIABLE CP

Z/BV	.1580	.3160	.6000	.8400	.9250
X/CV					
.000	.6087	.5757	.6632	.6317	.6394
.025	.0510	-.1567	-.1643	-.1734	-.2728
.050	.2476	.0912	.1388	.0633	-.1213
.150	.1416	.0521	.0992	.0895	.0596
.300	-.0039	.0777	.0470	.0458	.0677
.520	-.0124	-.0662	-.0854	-.0920	-.1757
.685	-.4081	-.7879	-.7661	-.8086	-.7602
.775	-.3290	-.5219	-.7412	-.7699	-.7773
.900		-.4114	-.7356	-.7656	-.7008

ALPHAO(1) = -7.960 BETAO (4) = 4.120

SECTION (1)LEFT VERTICAL DEPENDENT VARIABLE CP

Z/BV	.1580	.3160	.6000	.8400	.9250
X/CV					
.000	.5537	.5187	.5218	.4585	.5117
.025	-.1719	-.4690	-.6362	-.9544	-1.0150
.050	-.2136	-.4039	-.6599	-.9295	-.9697
.150	.0169	-.2274	-.4518	-.6844	-.7630
.300	-.1122	-.1693	-.2883	-.2779	-.3238
.520	-.2000	-.2011	-.2464	-.2489	-.2027
.685	-.4578	-.8131	-.7590	-.8434	-.7634
.775	-.3788	-.5819	-.7772	-.8099	-.8021
.900		-.4493	-.6870	-.7848	-.7198

ALPHAO(1) = -7.990 BETAO (5) = 8.210

SECTION (1)LEFT VERTICAL DEPENDENT VARIABLE CP

Z/BV	.1580	.3160	.6000	.8400	.9250
X/CV					
.000	.4126	.3070	.3085	.2369	.3214
.025	-.3336	-.6086	-.7736	-.9128	-1.0380
.050	-.3719	-.5856	-.7835	-.9839	-1.0670
.150	-.4674	-.5604	-.7356	-.7132	-.9474
.300	-.1141	-.4848	-.6561	-.6802	-.6524
.520	-.2916	-.3897	-.6531	-.6642	-.5376
.685	-.5470	-.7716	-.8920	-.7659	-.8549
.775	-.4132	-.6114	-.7545	-.6563	-.6347
.900		-.5513	-.5766	-.5605	-.4886

ARC11-716 IA14 O1+T12+512N25 LEFT VERTICAL (RB1V47)

ALPHAO (2) = -3.820 BETAO (1) = -8.120

SECTION (1)LEFT VERTICAL DEPENDENT VARIABLE CP

Z/BV	.1580	.3160	.6000	.8400	.9250
X/CV					
.000	.3891	.2694	.2762	.3058	.2173
.025	.5671	.5310	.5310	.5036	.4105
.050	.5237	.4893	.4977	.4643	.4213
.150	.4025	.3896	.3667	.3606	.2659
.300	.3041	.2891	.2595	.2266	.1683
.520	.1288	.0666	.0467	-.0285	-.1919
.685	-.3984	-.6717	-.6965	-.7303	-.7469
.775	-.3250	-.4105	-.6364	-.6883	-.7236
.900		-.3522	-.5308	-.6628	-.6932

ALPHAO (2) = -3.830 BETAO (2) = -4.020

SECTION (1)LEFT VERTICAL DEPENDENT VARIABLE CP

Z/BV	.1580	.3160	.6000	.8400	.9250
X/CV					
.000	.5025	.4432	.4743	.4610	.4323
.025	.3408	.2553	.3076	.3151	.1916
.050	.3528	.2732	.3085	.2926	.2830
.150	.2244	.2130	.2110	.2216	.1514
.300	.1396	.1454	.1207	.1268	.1053
.520	.0169	-.0353	-.0642	-.0664	-.2191
.685	-.4093	-.7601	-.7510	-.7612	-.7884
.775	-.3153	-.5007	-.7217	-.7338	-.7768
.900		-.3805	-.6835	-.7379	-.7473

ALPHAO (2) = -3.910 BETAO (3) = .030

SECTION (1)LEFT VERTICAL DEPENDENT VARIABLE CP

Z/BV	.1580	.3160	.6000	.8400	.9250
X/CV					
.000	.5653	.5022	.5650	.5431	.5617
.025	-.0185	-.2167	-.2489	-.2104	-.3141
.050	.1945	.0321	-.0452	-.0051	-.1609
.150	.0855	-.0354	.0442	.0636	.0046
.300	-.0741	-.0499	.0045	-.0003	.0269
.520	-.1020	-.1085	-.1302	-.1202	-.2113
.685	-.3957	-.7737	-.7819	-.8134	-.7837
.775	-.3097	-.5001	-.7621	-.7829	-.7959
.900		-.4017	-.7498	-.7834	-.7362

ARC11-716 IA14 OL+T12+S12N25 LEFT VERTICAL (RB1V47)

ALPHAO(2) = -3.910 BETAO (4) = 4.100

SECTION (1)LEFT VERTICAL DEPENDENT VARIABLE CP

Z/BV	.1580	.3160	.6000	.8400	.9250
X/CV					
.000	.5025	.4623	.4519	.3770	.4304
.025	-.2168	-.4761	-.6853	-.9579	-1.0180
.050	-.2454	-.4472	-.7083	-.9412	-.9802
.150	-.0276	-.2469	-.4577	-.7185	-.7890
.300	-.1634	-.2183	-.3276	-.2786	-.3129
.520	-.2638	-.2501	-.2768	-.2720	-.2297
.685	-.4769	-.7878	-.7687	-.8480	-.7734
.775	-.3537	-.5438	-.8006	-.8173	-.8122
.900		-.4583	-.5090	-.7626	-.7331

ALPHAO(2) = -3.920 BETAO (5) = 8.180

SECTION (1)LEFT VERTICAL DEPENDENT VARIABLE CP

Z/BV	.1580	.3160	.6000	.8400	.9250
X/CV					
.000	.3819	.2799	.2536	.1816	.2402
.025	-.3307	-.6121	-.7992	-.9127	-1.0260
.050	-.3703	-.5992	-.8027	-.9622	-1.0650
.150	-.4776	-.5765	-.7647	-.7891	-.8914
.300	-.1524	-.5017	-.6837	-.7253	-.6635
.520	-.3446	-.4064	-.6647	-.6943	-.5394
.685	-.5673	-.7255	-.8857	-.7021	-.6126
.775	-.3660	-.5941	-.7315	-.5948	-.5351
.900		-.5401	-.5766	-.5438	-.4791

ALPHAO(3) = .020 BETAO (1) = -8.130

SECTION (1)LEFT VERTICAL DEPENDENT VARIABLE CP

Z/BV	.1580	.3160	.6000	.8400	.9250
X/CV					
.000	.3326	.2172	.2069	.2182	.1340
.025	.4963	.4571	.4628	.4472	.3566
.050	.4589	.4174	.4323	.4097	.3715
.150	.3306	.3200	.3042	.3158	.2210
.300	.2337	.2271	.2056	.1848	.1188
.520	.0792	.0213	.0092	-.0639	-.2288
.685	-.4090	-.6941	-.7103	-.7464	-.7618
.775	-.3200	-.4210	-.6493	-.7044	-.7397
.900		-.3502	-.3202	-.6752	-.7121

APC11-716 TA14 OI-T12+312/25 LEFT VERTICAL (RB1V47)

ALPHAO(3) = .090 BETAO (2) = -4.060

SECTION (1)LEFT VERTICAL DEPENDENT VARIABLE CP

Z/BV	.1580	.3160	.6000	.8400	.9250
X/CV					
.000	.4419	.3685	.3899	.3888	.3434
.025	.2996	.1876	.2540	.2702	.1614
.050	.3043	.2109	.2606	.2471	.2435
.150	.1586	.1542	.1602	.1831	.1074
.300	.0761	.0916	.0807	.0887	.0651
.520	-.0211	-.0705	-.1076	-.1017	-.2552
.685	-.4175	-.7669	-.7646	-.7722	-.8073
.775	-.3195	-.4988	-.7355	-.7491	-.7995
.900		-.3846	-.6982	-.7588	-.7820

ALPHAO(3) = -.330 BETAO (3) = .040

SECTION (1)LEFT VERTICAL DEPENDENT VARIABLE CP

Z/BV	.1580	.3160	.6000	.8400	.9250
X/CV					
.000	.5274	.4460	.4803	.4701	.4893
.025	-.0776	-.2556	-.3409	-.2498	-.3471
.050	.1505	-.0172	-.1091	-.0769	-.2064
.150	.0439	-.0836	-.0199	.0377	-.0431
.300	-.1183	-.1110	-.0409	-.0458	-.0135
.520	-.1578	-.1540	-.1698	-.1579	-.2431
.685	-.4117	-.7609	-.7996	-.8252	-.8033
.775	-.3127	-.4921	-.7804	-.7928	-.8102
.900		-.3940	-.7389	-.7952	-.7654

ALPHAO(3) = .060 BETAO (4) = 4.100

SECTION (1)LEFT VERTICAL DEPENDENT VARIABLE CP

Z/BV	.1580	.3160	.6000	.8400	.9250
X/CV					
.000	.4476	.3955	.3728	.2872	.3399
.025	-.2626	-.5026	-.7159	-.9814	-1.0430
.050	-.2922	-.5009	-.7395	-.9874	-1.0090
.150	-.0987	-.2953	-.4935	-.6673	-.8177
.300	-.2102	-.2685	-.3651	-.3517	-.2720
.520	-.3191	-.3026	-.3068	-.3401	-.2774
.685	-.5052	-.7070	-.7988	-.8563	-.8017
.775	-.3148	-.5235	-.8164	-.8219	-.8288
.900		-.4704	-.4708	-.5435	-.6503

ARC11-716 IA14 OL+T12+S12N25 LEFT VERTICAL (RB1V47)

ALPHAO(3) = .070 BETAO (5) = 8.180

SECTION (1)LEFT VERTICAL DEPENDENT VARIABLE CP

Z/BV	.1580	.3160	.6000	.8400	.9250
X/CV					
.000	.3269	.2391	.1889	.0869	.1582
.025	-.3656	-.6155	-.8275	-.9264	-1.0170
.050	-.3995	-.6187	-.8282	-.9805	-1.0720
.150	-.5400	-.6065	-.8016	-.8248	-.8594
.300	-.1955	-.5358	-.7104	-.7502	-.8937
.520	-.4019	-.4565	-.6681	-.7077	-.5843
.685	-.6007	-.6876	-.8789	-.6433	-.6179
.775	-.3260	-.6191	-.7085	-.5562	-.5135
.900		-.5425	-.5833	-.5284	-.4879

ALPHAO(4) = 4.120 BETAO (1) = -8.110

SECTION (1)LEFT VERTICAL DEPENDENT VARIABLE CP

Z/BV	.1580	.3160	.6000	.8400	.9250
X/CV					
.000	.2725	.1804	.1423	.1381	.0496
.025	.4212	.5741	.3760	.3849	.3052
.050	.3764	.3363	.3541	.3461	.3208
.150	.2385	.2482	.2290	.2680	.1731
.300	.1643	.1639	.1643	.1449	.0806
.520	.0278	-.0327	-.0438	-.0961	-.2695
.685	-.4380	-.7343	-.7158	-.7488	-.7759
.775	-.3351	-.4157	-.6633	-.7121	-.7524
.900		-.3349	-.4680	-.6736	-.7250

ALPHAO(4) = 4.100 BETAO (2) = -4.030

SECTION (1)LEFT VERTICAL DEPENDENT VARIABLE CP

Z/BV	.1580	.3160	.6000	.8400	.9250
X/CV					
.000	.4074	.2982	.3183	.2972	.2577
.025	.2157	.0749	.1694	.1870	.0809
.050	.2303	.0989	.1789	.1673	.1698
.150	.0919	.0510	.0864	.1206	.0458
.300	-.0363	.0272	.0231	.0291	.0037
.520	-.0900	-.1192	-.1523	-.1463	-.3074
.685	-.4442	-.7827	-.7891	-.8018	-.8300
.775	-.3349	-.5144	-.7647	-.7787	-.8226
.900		-.3832	-.7188	-.7867	-.8092

ARC11-716 IA14 OL+T12+S12N25 LEFT VERTICAL (RB1V47)

ORIGINAL PAGE IS OF POOR QUALITY

ALPHAO(4) = 4.100 BETAO (5) = .040

SECTION (1)LEFT VERTICAL DEPENDENT VARIABLE CP

Z/BV	.1580	.3160	.6000	.8400	.9250
X/CV					
.000	.4701	.3679	.3801	.3635	.3928
.025	-.1392	-.2981	-.4210	-.3024	-.3710
.050	.0988	-.0726	-.1496	-.1132	-.2569
.150	-.0995	-.1380	-.1184	-.0264	-.1004
.300	-.1699	-.1886	-.0944	-.0944	-.0685
.520	-.2292	-.2102	-.2174	-.1958	-.2944
.645	-.4393	-.7204	-.8155	-.8268	-.8264
.775	-.3128	-.4763	-.8019	-.8086	-.8232
.900		-.4132	-.5506	-.8040	-.7896

ALPHAO(4) = 4.090 BETAO (4) = 4.130

SECTION (1)LEFT VERTICAL DEPENDENT VARIABLE CP

Z/BV	.1580	.3160	.6000	.8400	.9250
X/CV					
.000	.3997	.3263	.2947	.2003	.2558
.025	-.3047	-.5244	-.7460	-.9750	-1.0420
.050	-.3201	-.5399	-.7652	-.9771	-1.0140
.150	-.1443	-.3354	-.5350	-.6460	-.8418
.300	-.2457	-.3145	-.4019	-.3914	-.5272
.520	-.3869	-.3616	-.3468	-.3919	-.5204
.645	-.4540	-.5893	-.8228	-.8541	-.8152
.775	-.3038	-.5394	-.7423	-.8164	-.8366
.900		-.4572	-.4553	-.5228	-.5424

ALPHAO(4) = 4.080 BETAO (5) = 8.230

SECTION (1)LEFT VERTICAL DEPENDENT VARIABLE CP

Z/BV	.1580	.3160	.6000	.8400	.9250
X/CV					
.000	.2472	.1817	.1254	.0082	.0742
.025	-.4529	-.6275	-.8391	-.9054	-.9706
.050	-.4827	-.6403	-.8425	-.9157	-1.0080
.150	-.6107	-.6315	-.8197	-.8239	-.8963
.300	-.2376	-.5698	-.7320	-.7835	-.8067
.520	-.4407	-.5059	-.6821	-.6841	-.6186
.645	-.4658	-.6739	-.8303	-.8010	-.5928
.775	-.3189	-.6090	-.6876	-.5498	-.5872
.900		-.4405	-.5870	-.5571	-.5486

ARC11-716 IA14 01+T12+S12N25 LEFT VERTICAL (RB1V47)

ALPHAO(5) = 8.090 BETAO (1) = -4.090

SECTION (1)LEFT VERTICAL DEPENDENT VARIABLE CP

Z/BV	.1580	.3160	.6000	.8400	.9250
X/CV					
.000	.2985	.1164	.0896	.0519	-.0359
.025	.3407	.2808	.3238	.3306	.2577
.050	.3024	.2455	.3025	.2989	.2764
.150	.1579	.1575	.1882	.2340	.1343
.300	.0563	.0972	.1298	.1179	.0480
.520	-.0481	-.0490	-.0712	-.1156	-.2986
.685	-.5154	-.7302	-.7038	-.7319	-.7781
.775	-.3389	-.4629	-.6655	-.7064	-.7564
.900		-.3225	-.4015	-.6522	-.7196

ALPHAO(5) = 8.030 BETAO (2) = -4.040

SECTION (1)LEFT VERTICAL DEPENDENT VARIABLE CP

Z/BV	.1580	.3160	.6000	.8400	.9250
X/CV					
.000	.4119	.2482	.2512	.2130	.1770
.025	.1127	.0123	.0808	.1220	.0172
.050	.1595	.0323	.1020	.0992	.1136
.150	.0268	-.0362	.0217	.0697	-.0117
.300	-.1212	-.0501	-.0302	-.0260	-.0495
.520	-.1522	-.1654	-.1880	-.1906	-.8427
.685	-.4831	-.7938	-.8007	-.8001	-.8427
.775	-.3813	-.5159	-.7880	-.7958	-.8373
.900		-.3743	-.6732	-.7971	-.8178

ALPHAO(5) = 8.030 BETAO (3) = .020

SECTION (1)LEFT VERTICAL DEPENDENT VARIABLE CP

Z/BV	.1580	.3160	.6000	.8400	.9250
X/CV					
.000	.4315	.3099	.2978	.2632	.2946
.025	-.1832	-.3429	-.4709	-.4167	-.4068
.050	.0969	-.1213	-.2349	-.1487	-.3136
.150	-.0546	-.1893	-.1918	-.1037	-.1654
.300	-.2311	-.2908	-.1731	-.1559	-.1299
.520	-.2976	-.2697	-.2671	-.2424	-.3302
.685	-.4791	-.6788	-.8386	-.8396	-.8562
.775	-.3262	-.4652	-.8281	-.8373	-.8497
.900		-.4620	-.4979	-.8036	-.5166

ARC11-716 IA14 OI+T12+S12N25 LEFT VERTICAL (RB1V47)

ALPHA(5) = 8.020 BETA(4) = 4.170

SECTION (1)LEFT VERTICAL DEPENDENT VARIABLE CP

Z/BV	.1580	.3160	.6000	.8400	.9250
X/CV					
.000	.4113	.2708	.2173	.1219	.1735
.025	-.3129	-.5501	-.7735	-.9111	-1.0320
.050	-.2559	-.5895	-.7845	-.9918	-1.0150
.150	-.1429	-.3433	-.5636	-.5850	-.8929
.300	-.3025	-.3609	-.4187	-.4337	-.5296
.520	-.4427	-.4130	-.3787	-.4216	-.3554
.685	-.3584	-.5099	-.7990	-.8527	-.8155
.775	-.2972	-.5553	-.5328	-.6035	-.6104
.900		-.4150	-.4170	-.4638	-.4206

ALPHA(5) = 8.020 BETA(5) = 8.260

SECTION (1)LEFT VERTICAL DEPENDENT VARIABLE CP

Z/BV	.1580	.3160	.6000	.8400	.9250
X/CV					
.000	.2766	.1395	.0653	-.1015	-.0348
.025	-.4886	-.6866	-.8547	-.8935	-.9256
.050	-.5194	-.6964	-.8597	-.9018	-.9469
.150	-.2186	-.6782	-.8393	-.8305	-.9247
.300	-.3765	-.5112	-.7447	-.8108	-.8897
.520	-.5531	-.4995	-.6736	-.7055	-.7493
.685	-.3850	-.5258	-.7299	-.6309	-.6690
.775	-.3255	-.4209	-.6564	-.6206	-.6311
.900		-.3258	-.5700	-.6322	-.5936

ARC11-718 IA14 OL+T12+S12N25 LEFT VERTICAL (RB1V48) (15 FEB 74)

REFERENCE DATA

SREF = 2.4210 SQ.FT. XMRP = 29.5800 INCHES
LREF = 38.7090 INCHES YMRP = .0000 INCHES
BREF = 38.7090 INCHES ZMRP = .0000 INCHES
SCALE = .0500 SCALE

PARAMETRIC DATA

MACH = 1.100 ELEVON = .000
RUDDER = .000 SPDBRK = .000

ALPHAO(1) = -7.950 BETAO (1) = -8.080

SECTION (1)LEFT VERTICAL DEPENDENT VARIABLE CP

Z/BV	.1580	.3160	.6000	.8400	.9250
X/CV					
.000	.4588	.3473	.3808	.4300	.3492
.025	.6745	.6339	.6251	.5937	.5138
.050	.6328	.5864	.5840	.5518	.5150
.150	.5070	.4798	.4534	.4431	.3544
.300	.4011	.3738	.3361	.3115	.2569
.520	.2105	.1431	.1359	.0619	-.0959
.685	-.4219	-.5938	-.5993	-.6280	-.6515
.775	-.3423	-.4469	-.5460	-.5885	-.6344
.900		-.3130	-.4747	-.5787	-.5964

ALPHAO(1) = -7.950 BETAO (2) = -4.020

SECTION (2)LEFT VERTICAL DEPENDENT VARIABLE CP

Z/BV	.1580	.3160	.6000	.8400	.9250
X/CV					
.000	.5970	.5481	.5822	.6063	.5561
.025	.4808	.3886	.4180	.4223	.3101
.050	.4562	.3969	.4155	.3997	.3774
.150	.3412	.3278	.3158	.3197	.2529
.300	.2532	.2505	.2238	.2243	.1992
.520	.1188	.0760	.0488	.0179	-.1162
.685	-.4572	-.6830	-.6442	-.6821	-.6852
.775	-.3549	-.5705	-.6100	-.6399	-.6856
.900		-.3781	-.5769	-.6503	-.6560

ARC11-716 TA14 OB+T12+S12N25 LEFT VERTICAL (RB1V48)

ALPHAO(1) = -7.920 BETAO (3) = .040

SECTION (1)LEFT VERTICAL DEPENDENT VARIABLE CP

Z/BV	.1580	.3160	.6000	.8400	.9250
X/CV					
.000	.8587	.8140	.6751	.3607	.6699
.025	.0941	.1033	-.1532	-.1411	-.2305
.050	.2947	.1334	.0259	.0990	.1043
.150	.1906	.0763	.1347	.1380	.0499
.300	.0415	.0659	.0957	.0886	.1170
.500	.0444	-.0108	-.0310	-.0509	-.1099
.685	-.6116	-.7091	-.6779	-.7155	-.6712
.775	-.5305	-.5635	-.6545	-.6795	-.6875
.900		-.4091	-.6464	-.6796	-.6222

ALPHAO(1) = -7.930 BETAO (4) = 4.090

SECTION (1)LEFT VERTICAL DEPENDENT VARIABLE CP

Z/BV	.1580	.3160	.6000	.8400	.9250
X/CV					
.000	.5990	.5584	.5612	.4959	.5486
.025	-.1078	-.3935	-.5994	-.4548	-.4455
.050	-.1523	-.3595	-.6245	-.5417	-.4745
.150	.0405	-.1842	-.3651	-.6584	-.6746
.300	-.0567	-.1269	-.2427	-.2424	-.4103
.500	-.1492	-.1583	-.2122	-.1785	.1436
.685	-.4811	-.7299	-.6664	-.7499	-.6626
.775	-.3931	-.6438	-.6890	-.7177	-.6950
.900		-.4567	-.6947	-.7067	-.6293

ALPHAO(1) = -7.950 BETAO (5) = 8.230

SECTION (1)LEFT VERTICAL DEPENDENT VARIABLE CP

Z/BV	.1580	.3160	.6000	.8400	.9250
X/CV					
.000	.4520	.5438	.5485	.2729	.5515
.025	-.2022	-.5369	-.7005	-.8292	-.9415
.050	-.3131	-.5208	-.7056	-.8984	-.9653
.150	-.4392	-.5040	-.6696	-.6611	-.8580
.300	-.0585	-.4404	-.6055	-.6158	-.6303
.500	-.2461	-.5965	-.6029	-.6043	-.4812
.685	-.5307	-.7517	-.8284	-.7499	-.8332
.775	-.4241	-.6043	-.7930	-.6336	-.7568
.900		-.5429	-.5931	-.5963	-.5534

ARC11-716 IA14 O1+T12+S12N25 LEFT VERTICAL (RB1V48)

ALPHAO(2) = -3.940 BETAO (1) = -8.110

SECTION (1)LEFT VERTICAL DEPENDENT VARIABLE CP

Z/BV	.1580	.3160	.6000	.8400	.9250
X/CV					
.000	.4239	.3053	.3185	.3450	.2673
.025	.5930	.5502	.5441	.5217	.4459
.050	.5572	.5057	.5075	.4820	.4488
.150	.4248	.4056	.3812	.3885	.2995
.300	.3265	.3091	.2772	.2608	.2086
.520	.1555	.0924	.0870	.0226	-.1409
.685	-.4426	-.6284	-.6235	-.6537	-.6723
.775	-.3585	-.4699	-.5705	-.6127	-.6542
.900		-.3222	-.4920	-.5962	-.6255

ALPHAO(2) = -3.980 BETAO (2) = -4.020

SECTION (1)LEFT VERTICAL DEPENDENT VARIABLE CP

Z/BV	.1580	.3160	.6000	.8400	.9250
X/CV					
.000	.5525	.4798	.5150	.5173	.4747
.025	.5801	.2756	.3592	.3545	.2533
.050	.5376	.5003	.3364	.3336	.3228
.150	.2561	.2436	.2507	.2622	.1982
.300	.1675	.1849	.1677	.1732	.1497
.520	.0665	.0221	-.0070	-.0149	-.1515
.685	-.4358	-.6851	-.6608	-.6872	-.7059
.775	-.3535	-.5536	-.6395	-.6645	-.7042
.900		-.3750	-.5984	-.6744	-.6822

ALPHAO(2) = -3.080 BETAO (3) = .050

SECTION (1)LEFT VERTICAL DEPENDENT VARIABLE CP

Z/BV	.1580	.3160	.6000	.8400	.9250
X/CV					
.000	.6152	.5483	.5056	.5686	.5081
.025	.0337	-.1479	-.2477	-.1640	-.2716
.050	.2434	.0878	-.0944	.0126	-.1295
.150	.1426	.0224	.0633	.1125	.0453
.300	-.0104	-.0082	.0465	.0395	.0705
.520	-.0868	-.0628	-.0780	-.0669	-.1474
.685	-.3944	-.7162	-.6953	-.7286	-.6949
.775	-.3111	-.5030	-.6776	-.6855	-.7080
.900		-.3809	-.6626	-.7013	-.6588

ARC11-716 IA14 OL+T12+S12N25 LEFT VERTICAL (RB1V48)

ALPHAO(2) = -3.890 BETAO (4) = 4.130

SECTION (1)LEFT VERTICAL DEPENDENT VARIABLE CP

Z/BV	.1580	.3160	.6000	.8400	.9250
X/CV					
.000	.5449	.4952	.4887	.4134	.4646
.025	-.1525	-.4026	-.6411	-.8599	-.9148
.050	-.1906	-.3831	-.6654	-.8475	-.8843
.150	.0098	-.1922	-.3747	-.6643	-.6987
.300	-.1104	-.1711	-.2702	-.2479	-.3852
.320	-.2143	-.2157	-.2364	-.2104	-.1772
.685	-.4748	-.7598	-.6924	-.7581	-.6812
.775	-.3706	-.5663	-.7195	-.7258	-.7103
.900		-.4432	-.7112	-.7169	-.6689

ALPHAO(2) = -3.890 BETAO (5) = 8.190

SECTION (1)LEFT VERTICAL DEPENDENT VARIABLE CP

Z/BV	.1580	.3160	.6000	.8400	.9250
X/CV					
.000	.4099	.3156	.2931	.2085	.2796
.025	-.2955	-.5448	-.7239	-.8376	-.9308
.050	-.3275	-.5388	-.7254	-.8917	-.9600
.150	-.4663	-.5259	-.6979	-.7047	-.8663
.300	-.1081	-.4578	-.6205	-.6429	-.6172
.520	-.3036	-.3798	-.6032	-.6227	-.4837
.685	-.5440	-.7322	-.8273	-.7058	-.7603
.775	-.3881	-.5887	-.7774	-.6019	-.5724
.900		-.5431	-.5791	-.5465	-.4762

ALPHAO(3) = -.310 BETAO (1) = -8.140

SECTION (1)LEFT VERTICAL DEPENDENT VARIABLE CP

Z/BV	.1580	.3160	.6000	.8400	.9250
X/CV					
.000	.3815	.2680	.2512	.2616	.1873
.025	.5401	.4901	.4825	.4518	.3813
.050	.4962	.4497	.4495	.4157	.3881
.150	.3681	.3540	.3242	.3290	.2488
.300	.2724	.2620	.2265	.2097	.1602
.520	.1245	.0598	.0091	-.0110	-.1760
.685	-.4564	-.6485	-.6467	-.6607	-.6831
.775	-.3447	-.5055	-.6018	-.6245	-.6673
.900		-.3558	-.5317	-.6033	-.6417

ARC11-716 IA14 O1+T12+S12N25 LEFT VERTICAL (RB1V48)

ALPHAO(3) = -.330 BETAO (2) = -4.040

SECTION (1)LEFT VERTICAL DEPENDENT VARIABLE CP

Z/BV	.1580	.3160	.6000	.8400	.9250
X/CV					
.000	.5037	.4167	.4509	.4384	.3996
.025	.3262	.1858	.2720	.2900	.1942
.050	.3374	.2100	.2788	.2750	.2728
.150	.1961	.1648	.1942	.2138	.1495
.300	.0752	.1302	.1219	.1290	.1094
.520	.0249	-.0168	-.0489	-.0488	-.1934
.685	-.4312	-.7063	-.6867	-.6983	-.7229
.775	-.3272	-.5424	-.6687	-.6797	-.7212
.900		-.3793	-.6241	-.6890	-.7027

ALPHAO(3) = -.340 BETAO (3) = .030

SECTION (1)LEFT VERTICAL DEPENDENT VARIABLE CP

Z/BV	.1580	.3160	.6000	.8400	.9250
X/CV					
.000	.5736	.4852	.5087	.4929	.5243
.025	-.0197	-.1864	-.3099	-.2300	-.2889
.050	.2040	.0386	-.1286	-.0452	-.1611
.150	.0979	-.0251	-.0083	.0665	.0067
.300	-.0571	-.0690	-.0017	.0004	.0418
.520	-.1221	-.1097	-.1110	-.1036	-.1799
.685	-.4045	-.7244	-.7115	-.7376	-.7169
.775	-.3134	-.4892	-.6957	-.7118	-.7244
.900		-.3852	-.6794	-.7166	-.6864

ALPHAO(3) = -.340 BETAO (4) = 4.110

SECTION (1)LEFT VERTICAL DEPENDENT VARIABLE CP

Z/BV	.1580	.3160	.6000	.8400	.9250
X/CV					
.000	.4926	.4354	.4213	.3372	.3887
.025	-.1908	-.4275	-.6600	-.8682	-.9281
.050	-.2268	-.4234	-.6882	-.8604	-.9042
.150	-.0555	-.2490	-.4229	-.6897	-.7288
.300	-.1453	-.2135	-.3113	-.2855	-.3953
.520	-.2608	-.2609	-.2730	-.2560	-.2136
.685	-.4880	-.7581	-.7176	-.7625	-.7010
.775	-.3471	-.5443	-.7401	-.7452	-.7293
.900		-.4549	-.6251	-.7354	-.7203

ARC11-718 IA14 O1+T12+S12N25 LEFT VERTICAL (RB1V48)

ORIGINAL PAGE IS OF POOR QUALITY

ALPHAO(3) = -.340 BETAO (3) = 8.180

SECTION (1)LEFT VERTICAL DEPENDENT VARIABLE CP

Z/BV	.1580	.3160	.6000	.8400	.9250
X/CV					
.000	.3621	.2711	.2271	.1274	.2065
.025	-.3324	-.5551	-.7477	-.8335	-.9092
.050	-.3622	-.5609	-.7503	-.8780	-.9478
.150	-.5270	-.5528	-.7317	-.7443	-.8241
.300	-.1413	-.4911	-.6541	-.6694	-.6207
.520	-.3455	-.4273	-.6178	-.6551	-.5202
.685	-.5644	-.7041	-.8369	-.6913	-.6593
.775	-.3541	-.5945	-.7322	-.5745	-.5462
.900		-.5425	-.5787	-.5243	-.4818

ALPHAO(4) = 4.170 BETAO (1) = -6.250

SECTION (1)LEFT VERTICAL DEPENDENT VARIABLE CP

Z/BV	.1580	.3160	.6000	.8400	.9250
X/CV					
.000	.3175	.1991	.1793	.1506	.0875
.025	.4763	.4105	.4151	.3780	.3135
.050	.4245	.3744	.3863	.3429	.3231
.150	.2765	.2914	.2651	.2675	.1852
.300	.2002	.2078	.1710	.1578	.1130
.520	.0821	.0247	-.0514	-.0594	-.2307
.685	-.4936	-.6635	-.6653	-.6801	-.7045
.775	-.3469	-.5441	-.6247	-.6544	-.6932
.900		-.3601	-.5613	-.6323	-.6742

ALPHAO(4) = 4.160 BETAO (2) = -4.050

SECTION (1)LEFT VERTICAL DEPENDENT VARIABLE CP

Z/BV	.1580	.3160	.6000	.8400	.9250
X/CV					
.000	.4635	.3477	.3653	.3405	.3065
.025	.2574	.1254	.1920	.2202	.1335
.050	.2755	.1403	.2003	.2035	.2122
.150	.1482	.0743	.1238	.1633	.0879
.300	.0031	.0500	.0675	.0732	.0499
.520	-.0904	-.0992	-.0911	-.0901	-.2378
.685	-.4519	-.7200	-.7053	-.6984	-.7441
.775	-.3298	-.5177	-.6611	-.6779	-.7399
.900		-.3694	-.6408	-.6649	-.7252

ARC11-716 IA14 O1+T12+S12N25 LEFT VERTICAL (RB1V48)

ALPHAO(4) = 4.170 BETAO (3) = .030

SECTION (1)LEFT VERTICAL DEPENDENT VARIABLE CP

Z/BV	.1580	.3160	.6000	.8400	.9250
X/CV					
.000	.5259	.4222	.4225	.3887	.4182
.025	-.0709	-.2202	-.3371	-.2840	-.2976
.050	.1603	.0015	-.1238	-.0897	-.2212
.150	.0532	-.0848	-.0712	.0004	-.0611
.300	-.0995	-.1215	-.0689	-.0574	-.0277
.520	-.1708	-.1647	-.1716	-.1408	-.2219
.685	-.4309	-.7287	-.7312	-.7414	-.7419
.775	-.5232	-.4852	-.7178	-.7275	-.7432
.900		-.3925	-.7031	-.7260	-.7159

ALPHAO(4) = 4.170 BETAO (4) = 4.130

SECTION (1)LEFT VERTICAL DEPENDENT VARIABLE CP

Z/BV	.1580	.3160	.6000	.8400	.9250
X/CV					
.000	.4507	.3710	.3358	.2544	.3102
.025	-.2263	-.4474	-.6949	-.9709	-.9312
.050	-.2491	-.4584	-.7049	-.8679	-.9079
.150	-.0845	-.2698	-.4211	-.6959	-.7428
.300	-.1832	-.2631	-.3227	-.2837	-.2731
.520	-.3221	-.3082	-.3023	-.2848	-.2462
.685	-.4349	-.6192	-.7443	-.7640	-.7192
.775	-.3049	-.4912	-.7566	-.7562	-.7508
.900		-.4377	-.4910	-.7297	-.7426

ALPHAO(4) = 4.160 BETAO (5) = 8.240

SECTION (1)LEFT VERTICAL DEPENDENT VARIABLE CP

Z/BV	.1580	.3160	.6000	.8400	.9250
X/CV					
.000	.2912	.2188	.1639	.0519	.1149
.025	-.4257	-.5636	-.7508	-.7982	-.8712
.050	-.4476	-.5795	-.7553	-.8064	-.9024
.150	-.5632	-.5681	-.7376	-.7199	-.7968
.300	-.1653	-.5201	-.6657	-.6720	-.7073
.520	-.3757	-.4633	-.6236	-.6645	-.5593
.685	-.5017	-.6666	-.8279	-.6198	-.6415
.775	-.3288	-.6068	-.7056	-.5499	-.5520
.900		-.4807	-.5732	-.5181	-.5303

ARC11-715 IA14 O1+T12+S12N25 LEFT VERTICAL (RB1V48)

ALPHAO(5) = 8.130 BETAO (1) = -4.040

SECTION (1)LEFT VERTICAL DEPENDENT VARIABLE CP

Z/BV	.1580	.3160	.6000	.8400	.9250
X/CV					
.000	.4636	.3045	.2960	.2423	.2148
.025	.1532	.0677	.1187	.1488	.0517
.050	.2133	.0891	.1415	.1251	.1413
.150	.0812	.0091	.0568	.0918	.0258
.300	-.0663	-.0108	.0088	.0087	-.0064
.520	-.0974	-.1120	-.1361	-.1381	-.1754
.685	-.5078	-.7587	-.7183	-.7258	-.7560
.775	-.3722	-.5254	-.7048	-.7147	-.7522
.900		-.3851	-.6659	-.7156	-.7428

ALPHAO(5) = 8.130 BETAO (2) = .040

SECTION (1)LEFT VERTICAL DEPENDENT VARIABLE CP

Z/BV	.1580	.3160	.6000	.8400	.9250
X/CV					
.000	.4913	.3619	.3374	.2926	.3220
.025	-.1115	-.2572	-.3820	-.3554	-.3400
.050	.1277	-.0435	-.2451	-.1711	-.2920
.150	.0169	-.1161	-.1374	-.0615	-.1181
.300	-.1538	-.1828	-.1295	-.1145	-.0870
.520	-.2316	-.2082	-.2172	-.1869	-.2663
.685	-.4485	-.7395	-.7507	-.7482	-.7653
.775	-.3399	-.5030	-.7456	-.7505	-.7653
.900		-.4236	-.6620	-.7457	-.7446

ALPHAO(5) = 8.120 BETAO (3) = 4.160

SECTION (1)LEFT VERTICAL DEPENDENT VARIABLE CP

Z/BV	.1580	.3160	.6000	.8400	.9250
X/CV					
.000	.4510	.3216	.2809	.1644	.2172
.025	-.2092	-.4708	-.7048	-.8810	-.9299
.050	-.2031	-.4901	-.7201	-.8864	-.9155
.150	-.0772	-.2724	-.4681	-.6452	-.7677
.300	-.2343	-.3020	-.3542	-.3503	-.3187
.520	-.3771	-.3573	-.3386	-.3395	-.2976
.685	-.4359	-.5318	-.7734	-.7782	-.7480
.775	-.3047	-.3094	-.6660	-.7703	-.7605
.900		-.4624	-.4578	-.5782	-.7059

ARC11-716 IA14 O1+T12+S12N25 LEFT VERTICAL (RB1V48)

ALPHAO(5) = 8.110 BETAO (4) = 8.270

SECTION (1)LEFT VERTICAL DEPENDENT VARIABLE CP

Z/BV	.1580	.3160	.6000	.8400	.9250
X/CV					
.000	.3744	.2063	.1231	-.0187	.0318
.025	-.3998	-.5981	-.7573	-.8025	-.8587
.050	-.4415	-.6214	-.7623	-.8108	-.8852
.150	-.2307	-.5957	-.7450	-.7357	-.8370
.300	-.2932	-.4714	-.6667	-.7171	-.7826
.520	-.4496	-.4266	-.6107	-.6910	-.6374
.685	-.4041	-.5066	-.7454	-.6133	-.6370
.775	-.3368	-.5597	-.6460	-.5857	-.6211
.900		-.3355	-.5812	-.5819	-.5616

ARC11-716 1A14 C4+T12+S12N25 LEFT VERTICAL (RB1V49) (15 FEB 74)

REFERENCE DATA

SREF = 2.4210 SQ.FT. XMRP = 29.5800 INCHES
LREF = 38.7090 INCHES YMRP = .0000 INCHES
BREF = 38.7090 INCHES ZMRP = .0000 INCHES
SCALE = .0300 SCALE

PARAMETRIC DATA

MACH = 1.150 ELEVON = .000
RUDDER = .000 SPOARK = .000

ALPHAO(1) = -7.860 BETAO (1) = -8.060

SECTION (1)LEFT VERTICAL DEPENDENT VARIABLE CP

Z/BV	.1580	.3160	.6000	.8400	.9250
X/CV					
.000	.5075	.3981	.4283	.4758	.3969
.025	.7064	.6616	.6591	.6280	.5902
.050	.6624	.6144	.6147	.5882	.5492
.150	.5362	.5141	.4928	.4810	.3978
.300	.4341	.4127	.3871	.3582	.3057
.520	.2545	.1918	.1893	.1153	-.0204
.685	-.3626	-.5195	-.5251	-.5597	-.5780
.775	-.3241	-.4157	-.4745	-.5112	-.5609
.900		-.2784	-.4077	-.5057	-.5264

ALPHAO(1) = -7.860 BETAO (2) = -4.000

SECTION (1)LEFT VERTICAL DEPENDENT VARIABLE CP

Z/BV	.1580	.3160	.6000	.8400	.9250
X/CV					
.000	.6590	.5345	.6313	.6447	.5961
.025	.5101	.4379	.4686	.4709	.4194
.050	.5053	.4507	.4651	.4490	.4293
.150	.3984	.3836	.3729	.3667	.3074
.300	.3114	.3082	.2846	.2762	.2545
.520	.1794	.1360	.1110	.0801	-.0487
.685	-.4088	-.5767	-.5580	-.5981	-.6033
.775	-.3228	-.5178	-.5261	-.5593	-.6012
.900		-.3339	-.4953	-.5714	-.5770

ARC11-716 IA14 O1+T12+S12N25 LEFT VERTICAL (RB1V49)

ALPHAO(1) = -7.860 BETAO (3) = .040

SECTION (1)LEFT VERTICAL DEPENDENT VARIABLE CP

Z/BV	.1580	.3160	.6000	.8400	.9250
X/CV					
.000	.7162	.6624	.7239	.7073	.7160
.025	.1709	-.0169	-.0800	-.0441	-.1251
.050	.3583	.2071	.0577	.1539	-.0334
.150	.2561	.1506	.1987	.1963	.1663
.300	.1131	.1368	.1668	.1529	.1832
.520	.0732	.0524	.0383	.0365	-.0389
.685	-.3866	-.6171	-.5892	-.6238	-.5854
.775	-.3024	-.5475	-.5686	-.5906	-.5998
.900		-.3639	-.5628	-.5939	-.5409

ALPHAO(1) = -7.870 BETAO (4) = 4.100

SECTION (1)LEFT VERTICAL DEPENDENT VARIABLE CP

Z/BV	.1580	.3160	.6000	.8400	.9250
X/CV					
.000	.6654	.6105	.6092	.5423	.5908
.025	-.0521	-.3065	-.5149	-.7500	-.8008
.050	-.0771	-.2498	-.5418	-.7389	-.7832
.150	.1503	-.0911	-.2670	-.5654	-.5965
.300	.5119	-.0504	-.1561	-.1544	-.3311
.520	-.0828	-.0915	-.1352	-.1077	-.0405
.685	-.4584	-.6542	-.5856	-.6575	-.5862
.775	.3581	-.6172	-.6119	-.6286	-.6171
.900		-.4292	-.6187	-.6178	-.5567

ALPHAO(1) = -7.890 BETAO (5) = 8.200

SECTION (1)LEFT VERTICAL DEPENDENT VARIABLE CP

Z/BV	.1580	.3160	.6000	.8400	.9250
X/CV					
.000	.5020	.4022	.3990	.3255	.4048
.025	-.2150	-.4654	-.6215	-.7603	-.8646
.050	-.2463	-.4546	-.6251	-.8097	-.8882
.150	-.3651	-.4324	-.5974	-.6136	-.7780
.300	-.0122	-.3674	-.5303	-.5553	-.6345
.520	-.1949	-.2908	-.5260	-.5252	-.4313
.685	-.5064	-.6896	-.7482	-.7100	-.7586
.775	-.3985	-.5781	-.7343	-.6103	-.7675
.900		-.4941	-.5705	-.4989	-.5655

ARC11-718 TA14 OL+T12+S12N25 LEFT VERTICAL (RB1V49)

ALPHAO(2) = -3.090 BETAO (1) = -8.100

SECTION (1)LEFT VERTICAL DEPENDENT VARIABLE CP

Z/BV	.1580	.3160	.6000	.8400	.9250
X/CV					
.000	.4773	.3628	.3696	.3980	.3257
.025	.6328	.5836	.5808	.5598	.5131
.050	.5934	.5471	.5480	.5213	.4897
.150	.4660	.4488	.4246	.4246	.3433
.300	.3700	.3516	.3275	.3085	.2598
.520	.2107	.1487	.1251	.0757	-.0735
.685	-.3935	-.5509	-.5489	-.5799	-.5903
.775	-.3209	-.4535	-.5007	-.5312	-.5780
.900		-.3102	-.4387	-.5218	-.5465

ALPHAO(2) = -3.080 BETAO (2) = -4.120

SECTION (1)LEFT VERTICAL DEPENDENT VARIABLE CP

Z/BV	.1580	.3160	.6000	.8400	.9250
X/CV					
.000	.6016	.5274	.5582	.5589	.5107
.025	.4355	.3418	.4022	.4193	.3406
.050	.4401	.3525	.4010	.3896	.3737
.150	.3165	.3146	.3110	.3170	.2553
.300	.2383	.2502	.2329	.2315	.2076
.520	.1279	.0935	.0585	.0466	-.0885
.685	-.4114	-.5985	-.5783	-.6061	-.6230
.775	-.3110	-.5284	-.5569	-.5810	-.6219
.900		-.3358	-.5180	-.5922	-.6039

ALPHAO(2) = -3.090 BETAO (3) = .030

SECTION (1)LEFT VERTICAL DEPENDENT VARIABLE CP

Z/BV	.1580	.3160	.6000	.8400	.9250
X/CV					
.000	.6654	.5937	.6304	.6205	.6389
.025	.0935	-.0827	-.1718	-.1219	-.1719
.050	.2990	.1406	-.0734	.0699	-.1076
.150	.1939	.0824	.1049	.1800	.1037
.300	.0530	.0470	.1092	.0996	.1293
.520	-.0098	-.0101	-.0149	-.0030	-.0814
.685	-.3641	-.6471	-.6140	-.6408	-.6130
.775	-.2787	-.4916	-.5981	-.6131	-.6271
.900		-.3526	-.5052	-.6208	-.5023

ORIGINAL PAGE IS OF POOR QUALITY

ARC11-716 IA14 OL+T12+S12N25 LEFT VERTICAL (RB1V49)

ALPHAO(2) = -3.890 BETAO (4) = 4.080

SECTION (1)LEFT VERTICAL DEPENDENT VARIABLE CP

Z/BV	.1580	.3160	.6000	.8400	.9250
X/CV					
.000	.6071	.5459	.5337	.4585	.5073
.025	-.0915	-.3292	-.5538	-.7661	-.8201
.050	-.1312	-.5076	-.5877	-.7620	-.8048
.150	.0674	-.1322	-.3204	-.5955	-.6270
.300	-.0411	-.1025	-.2051	-.1968	-.3632
.520	-.1401	-.1413	-.1697	-.1539	-.1197
.685	-.4369	-.6783	-.6118	-.6792	-.6086
.775	-.3416	-.5563	-.6394	-.6535	-.6387
.900		-.4085	-.6424	-.6447	-.6003

ALPHAO(2) = -3.890 BETAO (5) = 8.180

SECTION (1)LEFT VERTICAL DEPENDENT VARIABLE CP

Z/BV	.1580	.3160	.6000	.8400	.9250
X/CV					
.000	.4619	.3686	.3421	.2628	.3349
.025	-.2356	-.4696	-.6441	-.7766	-.8687
.050	-.2652	-.4712	-.6469	-.8379	-.8908
.150	-.3972	-.4499	-.6232	-.6257	-.8003
.300	-.0501	-.3878	-.5482	-.5658	-.6303
.520	-.2451	-.3222	-.5261	-.5446	-.4420
.685	-.4990	-.6972	-.7468	-.6901	-.7557
.775	-.3790	-.5536	-.7334	-.5946	-.6971
.900		-.5025	-.5467	-.5078	-.5038

ALPHAO(3) = -.310 BETAO (1) = -8.100

SECTION (1)LEFT VERTICAL DEPENDENT VARIABLE CP

Z/BV	.1580	.3160	.6000	.8400	.9250
X/CV					
.000	.4200	.3012	.3046	.3176	.2430
.025	.5644	.5086	.5302	.5033	.4526
.050	.5236	.4742	.4962	.4663	.4396
.150	.3806	.3810	.3909	.3789	.2977
.300	.2909	.3055	.2914	.2680	.2143
.520	.1704	.1176	.0710	.0457	-.1121
.685	-.4133	-.5876	-.5627	-.5775	-.6090
.775	-.3207	-.4781	-.5212	-.5482	-.5977
.900		-.3207	-.4565	-.5388	-.5723

ARC11-716 IA14 OL+T12+S12M25 LEFT VERTICAL (RB1V49)

ALPHAO(3) = -.330 BETAO (2) = -4.030

SECTION (1)LEFT VERTICAL DEPENDENT VARIABLE CP

X/CV \ Z/BV	.1580	.3160	.6000	.8400	.9250
.000	.5467	.4497	.4862	.4736	.4238
.025	.3850	.2657	.3491	.3614	.3003
.050	.3866	.2838	.3475	.3396	.3251
.150	.2539	.2451	.2635	.2714	.2099
.300	.1394	.2009	.1928	.1913	.1552
.520	.0902	.0361	.0193	.0121	-.1272
.685	-.4197	-.6180	-.5013	-.6157	-.6380
.775	-.3014	-.5297	-.5814	-.5911	-.6374
.900		-.3433	-.5410	-.6016	-.6206

ALPHAO(3) = -.340 BETAO (3) = .030

SECTION (1)LEFT VERTICAL DEPENDENT VARIABLE CP

X/CV \ Z/BV	.1580	.3160	.6000	.8400	.9250
.000	.6144	.5232	.5557	.5350	.5587
.025	.0312	-.1215	-.2018	-.1458	-.1723
.050	.2499	.1003	-.0347	.0120	-.1004
.150	.1491	.0411	.0474	.1213	.0700
.300	-.0010	-.0156	.0570	.0658	.0982
.520	-.0763	-.0605	-.0479	-.0339	-.1094
.685	-.3694	-.6515	-.6217	-.6386	-.6501
.775	-.2742	-.4406	-.6102	-.6185	-.6388
.900		-.3425	-.5995	-.6249	-.6063

ALPHAO(3) = -.340 BETAO (4) = 4.100

SECTION (1)LEFT VERTICAL DEPENDENT VARIABLE CP

X/CV \ Z/BV	.1580	.3160	.6000	.8400	.9250
.000	.5490	.4783	.4605	.3784	.4307
.025	-.1531	-.3978	-.5973	-.7806	-.8317
.050	-.1903	-.3458	-.6253	-.7755	-.8163
.150	.0094	-.1714	-.3471	-.6150	-.6529
.300	-.0460	-.1904	-.2470	-.2201	-.3468
.520	-.2012	-.1954	-.2089	-.1927	-.1551
.685	-.4442	-.7008	-.6397	-.6851	-.6295
.775	-.3297	-.5125	-.6816	-.6655	-.6545
.900		-.4088	-.6908	-.6592	-.6907

ARC11-716 IA14 OI+T12+512N25 LEFT VERTICAL (RB1V49)

ALPHAO(5) = -.340 BETAO (5) = 8.170

SECTION (1)LEFT VERTICAL DEPENDENT VARIABLE CP

Z/BV	.1580	.3160	.6000	.8400	.9250
X/CV					
.000	.4074	.3272	.2936	.1956	.2639
.025	-.2764	-.4737	-.6636	-.7760	-.8467
.050	-.3040	-.4814	-.6699	-.8330	-.8768
.150	-.4402	-.4619	-.6447	-.6576	.6007
.300	-.0802	-.4010	-.5636	-.5826	-.5975
.520	-.2853	-.3621	-.5262	-.5581	-.4241
.685	-.5110	-.6695	-.7502	-.6996	-.7300
.775	-.5288	-.5388	-.7356	-.5964	-.5809
.900		-.5022	-.5389	-.5134	-.4500

ALPHAO(4) = 4.130 BETAO (1) = -6.080

SECTION (1)LEFT VERTICAL DEPENDENT VARIABLE CP

Z/BV	.1580	.3160	.6000	.8400	.9250
X/CV					
.000	.5488	.2214	.2091	.2207	.1460
.025	.4861	.4177	.4408	.4401	.3960
.050	.4400	.3802	.4104	.4041	.3862
.150	.2914	.2973	.2997	.3258	.2480
.300	.2037	.2302	.2136	.2252	.1790
.520	.1150	.0662	.0013	.0138	-.1542
.685	-.4556	-.5883	-.5793	-.5841	-.6175
.775	-.5150	-.5156	-.5408	-.5609	-.6062
.900		-.5255	-.4791	-.5433	-.5876

ALPHAO(4) = 4.010 BETAO (2) = -4.010

SECTION (1)LEFT VERTICAL DEPENDENT VARIABLE CP

Z/BV	.1580	.3160	.6000	.8400	.9250
X/CV					
.000	.4941	.3788	.3869	.3686	.3280
.025	.2840	.1926	.2395	.2793	.2219
.050	.3174	.1956	.2458	.2559	.2506
.150	.1903	.1307	.1815	.2105	.1446
.300	.0803	.1064	.1268	.1258	.1040
.520	.0084	-.0077	-.0325	-.0388	-.1740
.685	-.4385	-.6452	-.6224	-.6343	-.6608
.775	-.5006	-.5222	-.6065	-.6118	-.6574
.900		-.5336	-.5672	-.6177	-.6438

ARC11-716 IA14 OL+T12+S12N25 LEFT VERTICAL (RB1V49)

ALPHA(4) = 4.000 BETA(3) = .040

SECTION (1)LEFT VERTICAL DEPENDENT VARIABLE CP

X/CV \ Z/BV	.1580	.3160	.6000	.8400	.9250
.000	.5534	.4382	.4346	.4436	.4608
.025	-.0575	-.1897	-.3043	-.2392	-.2356
.050	.1841	.0122	-.2221	-.0513	-.1914
.150	.0907	-.0415	-.0362	.0555	-.0038
.500	-.0712	-.1038	-.0093	.0064	.0254
.520	-.1462	-.1292	-.1056	-.0741	-.1571
.685	-.5147	-.6728	-.6441	-.6454	-.6555
.775	.6949	-.4454	-.6291	-.635	-.6617
.900		-.3458	-.6228	-.6365	-.6381

ALPHA(4) = 4.030 BETA(4) = 4.110

SECTION (1)LEFT VERTICAL DEPENDENT VARIABLE CP

X/CV \ Z/BV	.1580	.3160	.6000	.8400	.9250
.000	.4408	.4 4[illegible]	.3649	.2925	.3542
.025	-.1954	-.5096	-.6278	-.7527	-.8444
.050	-.2357	-.4 45	-.6552	-.7592	-.8349
.150	-.0639	-.2421	-.5412	-.6485	-.6845
.500	-.1321	.2168	-.2957	-.2674	-.3[illegible]1
.520	-.2651	-.2655	-.2586	-.2481	-.1997
.685	-.4512	-.6526	-.6681	-.6849	-.6452
.775	-.2819	-.4637	-.6422	-.6789	-.6663
.900		-.4503	-.5037	-.6697	-.67[illegible]

ALPHA(4) = 4.030 BETA(5) = 8.210

SECTION (1)LEFT VERTICAL DEPENDENT VARIABLE CP

X/CV \ Z/BV	.1580	.3160	.6000	.8400	.9250
.000	.5222	.2477	.2019	.1002	.1651
.025	-.3973	-.5126	-.6829	-.7484	-.8241
.050	-.4234	-.5266	-.6901	-.7725	-.8578
.150	-.5267	-.5109	-.6693	-.6841	-.7509
.500	-.1542	-.4847	-.5997	-.6119	-.5887
.520	-.8421	-.4509	-.5585	-.6061	-.4813
.685	-.4837	-.4216	-.7592	-.6405	-.6288
.775	-.2965	-.5646	-.6647	-.5385	-.5027
.900		-.4646	-.5321	-.4890	-.4646

ORIGINAL PAGE IS OF POOR QUALITY

ARC11-716 IA14 OI+T12+S12N25 LEFT VERTICAL (RB1V49)

ALPHA(5) = 0.040 BETA(1) = -8.090

SECTION (1)LEFT VERTICAL DEPENDENT VARIABLE CP

Z/BV	.1580	.3160	.6000	.8400	.9250
X/CV					
.000	.3741	.1717	.1514	.1175	.0530
.025	.4046	.3335	.3657	.3494	.3072
.050	.3658	.2968	.3400	.3150	.3117
.150	.2244	.2154	.2270	.2504	.1902
.300	.1041	.1524	.1559	.1594	.1387
.520	.0178	.0207	-.0454	-.0260	-.1939
.685	-.2808	-.6141	-.5954	-.5996	-.6323
.775	-.3307	-.5804	-.5688	-.5873	-.6202
.900		-.3592	-.5105	-.5577	-.6030

ALPHA(5) = 7.970 BETA(2) = -4.030

SECTION (1)LEFT VERTICAL DEPENDENT VARIABLE CP

Z/BV	.1580	.3160	.6000	.8400	.9250
X/CV					
.000	.4670	.3500	.3112	.2625	.2347
.025	.2535	.1590	.1724	.2025	.1364
.050	.2460	.1436	.1655	.1765	.1994
.150	.1199	.0661	.1085	.1418	.0945
.300	-.0071	.0490	.0581	.0686	.0514
.520	-.0450	-.0548	-.0809	-.0641	-.2109
.685	-.4128	-.6594	-.6364	-.6266	-.6724
.775	-.3314	-.5444	-.6255	-.6126	-.6666
.900		-.3420	-.5880	-.6087	-.656.

ALPHA(5) = 0.080 BETA(5) = .040

SECTION (1)LEFT VERTICAL DEPENDENT VARIABLE CP

Z/BV	.1580	.3160	.6000	.8400	.9250
X/CV					
.000	.5170	.3859	.3637	.3202	.3548
.025	-.1010	-.2297	-.3400	-.3104	-.2901
.050	.1470	-.0414	-.2811	-.1685	-.2685
.150	.0437	-.0844	.0974	-.0240	-.0751
.300	-.1171	-.1522	-.0805	-.0895	-.0522
.520	-.1970	-.1080	-.1550	-.1335	-.2133
.685	-.4201	-.6904	-.6609	-.6728	-.6935
.775	-.3195	-.6725	-.6647	-.6744	-.6881
.900		-.5009	-.6534	-.6734	-.6706

ARC11-716 TA14 O1+T12+S12NE5 LEFT VERTICAL (R91V49)

ALPHAO(5) = 8.080 BETAO (4) = 4.140

SECTION (1)LEFT VERTICAL DEPENDENT VARIABLE CP

Z/BV	.1580	.3160	.6000	.8400	.9250
X/CV					
.000	.4794	.3553	.2869	.1805	.2397
.025	-.1745	-.4188	-.6413	-.8040	-.8438
.050	-.1874	-.4359	-.6663	-.8212	-.8420
.150	-.0512	-.2392	-.4246	-.6465	-.6985
.300	-.1781	-.2466	-.3266	-.3280	-.3061
.520	-.3157	-.3016	-.2934	-.3047	-.2536
.685	-.4133	-.5462	-.6929	-.7066	-.6646
.775	-.2814	-.4629	-.6932	-.6952	-.6785
.900		-.4405	-.4465	-.6142	-.6781

ALPHAO(5) = 8.090 BETAO (5) = 8.270

SECTION (1)LEFT VERTICAL DEPENDENT VARIABLE CP

Z/BV	.1580	.3160	.6000	.8400	.9250
X/CV					
.000	.3940	.2009	.1348	-.0053	.0650
.025	-.4233	-.5766	-.7004	-.7583	-.8047
.050	-.4384	-.5860	-.7075	-.7705	-.8348
.150	-.1496	-.5720	-.6896	-.7065	-.7598
.300	-.2907	-.4615	-.6265	-.6667	-.6860
.520	-.4460	-.4009	-.5714	-.6338	-.5589
.685	-.3754	-.4469	-.6601	-.5748	-.5758
.775	-.31 3	-.4429	-.6059	-.5425	-.5583
.900		-.3004	-.5630	-.5385	-.5325

ARC11-716 IA14 OL+T12+S12N25 LEFT VERTICAL (RB1V50) (15 FEB 74)

REFERENCE DATA

SREF = 2.4210 SQ.FT. XMRP = 29.5800 INCHES
LREF = 38.7090 INCHES YMRP = .0000 INCHES
BREF = 38.7090 INCHES ZMRP = .0000 INCHES
SCALE = .0300 SCALE

PARAMETRIC DATA

MACH = 1.250 ELEVON = .000
RUDDER = .000 SPDBRK = .000

ALPHAO(1) = -8.010 BETAO (1) = -8.020

SECTION (1)LEFT VERTICAL DEPENDENT VARIABLE CP

Z/BV	.1580	.3160	.6000	.8400	.9250
X/CV					
.000	.5595	.4522	.4868	.5284	.4558
.025	.7292	.6748	.6781	.6573	.6345
.050	.6826	.6308	.6409	.6214	.5915
.150	.5469	.5329	.5243	.5221	.4493
.300	.4473	.4397	.4227	.4127	.3643
.520	.3046	.2481	.2394	.1891	.0900
.685	-.2981	-.4064	-.4026	-.4348	-.4580
.775	-.3034	-.3608	-.3677	-.3922	-.4497
.900		-.2837	-.3265	-.4019	-.4241

ALPHAO(1) = -8.010 BETAO (2) = -4.000

SECTION (1)LEFT VERTICAL DEPENDENT VARIABLE CP

Z/BV	.1580	.3160	.6000	.8400	.9250
X/CV					
.000	.6911	.5999	.6525	.6757	.6328
.025	.5478	.4314	.4619	.4917	.4613
.050	.5416	.4311	.4632	.4722	.4523
.150	.4089	.3569	.3858	.4034	.3558
.300	.2778	.3002	.3182	.3293	.3071
.520	.1954	.1617	.1664	.1554	.0493
.685	-.3581	-.4618	-.4351	-.4642	-.4760
.775	-.3153	-.4398	-.4148	-.4336	-.4784
.900		-.3464	-.3933	-.4486	-.4680

ARC11-716 IA14 O1+T12+S12N25 LEFT VERTICAL (RB1V50)

ALPHAO(1) = -8.000 BETAO (3) = .030

SECTION (1)LEFT VERTICAL DEPENDENT VARIABLE CP

Z/BV	.1580	.3160	.6000	.8400	.9250
X/CV					
.000	.7465	.6771	.7023	.6973	.7213
.025	.1877	.0295	-.0763	-.1086	-.0699
.050	.3886	.1993	-.0456	.0556	-.0475
.150	.2902	.1719	.1589	.2098	.1872
.300	.1395	.1113	.1432	.1696	.2102
.520	.0483	.0483	.0611	.0874	.0262
.685	-.4136	-.5211	-.4761	-.4852	-.4655
.775	-.3067	-.5078	-.4670	-.4723	-.4809
.900		-.3898	-.4676	-.4855	-.4538

ALPHAO(1) = -8.010 BETAO (4) = 4.100

SECTION (1)LEFT VERTICAL DEPENDENT VARIABLE CP

Z/BV	.1580	.3160	.6000	.8400	.9250
X/CV					
.000	.6867	.6171	.6335	.5766	.6240
.025	-.0194	-.2378	-.5569	-.5974	-.6271
.050	-.0588	-.2335	-.5486	-.5916	-.6263
.150	.1096	-.0960	-.2053	-.4541	-.4702
.300	.0461	-.0377	-.0894	-.3216	-.3044
.520	-.0718	-.0769	-.1079	-.0639	-.0264
.685	-.4654	-.5640	-.5238	-.5141	-.4694
.775	-.3354	-.5574	-.5187	-.5039	-.4918
.900		-.4161	-.5211	-.4936	-.4515

ALPHAO(1) = -8.030 BETAO (5) = 8.160

SECTION (1)LEFT VERTICAL DEPENDENT VARIABLE CP

Z/BV	.1580	.3160	.6000	.8400	.9250
X/CV					
.000	.5593	.4672	.4756	.4035	.4671
.025	-.1573	-.3501	-.5053	-.6395	-.6769
.050	-.1863	-.3562	-.5155	-.6696	-.7030
.150	-.3262	-.3257	-.4789	-.5728	-.6392
.300	.0428	-.2832	-.4169	-.4434	.5205
.520	-.1179	-.2399	-.4174	-.3855	-.3789
.685	-.5095	-.5761	-.6292	-.6685	-.6200
.775	-.3613	-.5501	-.6220	-.6603	-.6440
.900		-.4510	-.5643	-.4693	-.6047

ARC11-716 IA14 O1+T12+S12N25 LEFT VERTICAL (RB1V50)

ALPHAO(2) = -3.930 BETAO (1) = -8.050

SECTION (1)LEFT VERTICAL DEPENDENT VARIABLE CP

Z/BV	.1580	.3160	.6000	.8400	.9250
X/CV					
.000	.5217	.4023	.4207	.4449	.3716
.025	.6646	.5867	.6012	.5837	.5705
.050	.6177	.5439	.5668	.5491	.5248
.150	.4693	.4578	.4532	.4592	.3896
.300	.3688	.3756	.3603	.3592	.3137
.520	.2537	.2079	.1781	.1456	.0457
.685	-.3284	-.4362	-.4351	-.4505	-.4798
.775	-.3018	-.4009	-.3997	-.4201	-.4747
.900		-.3077	-.3595	-.4262	-.4525

ALPHAO(2) = -3.930 BETAO (2) = -4.020

SECTION (1)LEFT VERTICAL DEPENDENT VARIABLE CP

Z/BV	.1580	.3160	.6000	.8400	.9250
X/CV					
.000	.6438	.5380	.5749	.5888	.5596
.025	.4658	.3485	.3741	.4115	.3982
.050	.4689	.3559	.3834	.3977	.3855
.150	.3490	.2740	.3114	.3399	.2932
.300	.2016	.2307	.2519	.2690	.2554
.520	.1323	.1071	.1159	.1116	.0174
.685	-.4080	-.4907	-.4618	-.4850	-.4994
.775	-.2988	-.4756	-.4484	-.4551	-.5034
.900		-.3432	-.4251	-.4728	-.4956

ALPHAO(2) = -3.940 BETAO (3) = .050

SECTION (1)LEFT VERTICAL DEPENDENT VARIABLE CP

Z/BV	.1580	.3160	.6000	.8400	.9250
X/CV					
.000	.7011	.6136	.6230	.6087	.6344
.025	.1265	-.0183	-.1213	-.1647	-.1337
.050	.3351	.1070	-.0935	-.0302	-.1067
.150	.2385	.1196	.1017	.1521	.1307
.300	.0910	.0535	.0877	.1129	.1735
.520	-.0066	-.0050	.0115	.0359	-.0148
.685	-.3839	-.5439	-.4959	-.5092	-.4916
.775	-.2771	-.5043	-.4927	-.5049	-.5063
.900		-.3499	-.4935	-.5185	-.4857

ARC11-716 IA14 O1+T12+S12N25 LEFT VERTICAL (RB1V50)

ALPHAO(2) = -3.940 BETAO (4) = 4.090

SECTION (1)LEFT VERTICAL DEPENDENT VARIABLE CP

X/CV \ Z/BV	.1580	.3160	.6000	.8400	.9250
.000	.6407	.5643	.5627	.4981	.5506
.025	-.0622	-.2572	-.5604	-.5944	-.6311
.050	-.1053	-.2546	-.5516	-.5920	-.6179
.150	.0767	-.1170	-.2274	-.4677	-.4769
.300	.0142	-.0735	-.1113	-.2548	-.2881
.520	-.1127	-.1178	-.1290	-.0851	-.0401
.685	-.4320	-.5847	-.5191	-.5158	-.4742
.775	-.5166	-.5201	-.5281	-.5045	-.4953
.900		-.5874	-.5271	-.5043	-.4801

ALPHAO(2) = -3.950 BETAO (5) = 8.110

SECTION (1)LEFT VERTICAL DEPENDENT VARIABLE CP

X/CV \ Z/BV	.1580	.3160	.6000	.8400	.9250
.000	.5294	.4314	.4183	.3356	.3918
.025	-.1981	-.3560	-.5292	-.6440	-.6852
.050	-.2165	-.3666	-.5367	-.6959	-.7142
.150	-.3328	-.3316	-.4932	-.5829	-.6457
.300	.0186	-.2995	-.4252	-.4604	-.5529
.520	-.1613	-.2650	-.4114	-.4092	-.3880
.685	-.4941	-.5938	-.6260	-.6791	-.6220
.775	-.3705	-.5358	-.6230	-.6685	-.6476
.900		-.4549	-.5815	-.4809	-.6206

ALPHAO(3) = -.340 BETAO (1) = -8.060

SECTION (1)LEFT VERTICAL DEPENDENT VARIABLE CP

X/CV \ Z/BV	.1580	.3160	.6000	.8400	.9250
.000	.4906	.3544	.3806	.3671	.2995
.025	.6047	.5139	.5398	.5210	.5134
.050	.5643	.4803	.5076	.4881	.4715
.150	.4103	.3952	.3983	.4055	.3402
.300	.3024	.3244	.3090	.3153	.2725
.520	.2127	.1703	.1352	.1096	.0111
.685	-.3636	-.4580	-.4900	-.4519	-.4880
.775	-.3165	-.4265	-.4183	-.4363	-.4765
.900		-.3283	-.3795	-.4395	-.4592

ARC11-716 IA14 O1+T12+S12N25 LEFT VERTICAL (RB1V50)

ALPHAO(3) = -.350 BETAO (2) = -4.020

SECTION (1)LEFT VERTICAL DEPENDENT VARIABLE CP

X/CV \ Z/BV	.1580	.3160	.6000	.8400	.9250
.000	.5686	.4813	.5071	.5134	.4890
.025	.4169	.2929	.3095	.3522	.3401
.050	.4171	.3021	.3225	.3385	.3310
.150	.2957	.2077	.2532	.2868	.2438
.300	.1446	.1723	.2024	.2213	.2037
.520	.0872	.0675	.0760	.0758	-.0155
.685	-.4296	-.5127	-.4834	-.4925	-.5129
.775	-.2899	-.4957	-.4724	-.4709	-.5209
.900		-.3382	-.4504	-.4878	-.5121

ALPHAO(3) = -.360 BETAO (3) = .040

SECTION (1)LEFT VERTICAL DEPENDENT VARIABLE CP

X/CV \ Z/BV	.1580	.3160	.6000	.8400	.9250
.000	.6431	.5562	.5552	.5241	.5540
.025	.0587	-.0634	-.1619	-.1927	-.1642
.050	.2685	.0393	-.1351	-.0802	-.1339
.150	.1919	.0756	.0564	.1073	.0769
.300	.0485	.0081	.0468	.0721	.1078
.520	-.0446	-.0432	-.0310	.0115	-.0494
.685	-.3976	-.5598	-.5130	-.5065	-.5132
.775	-.2740	-.4755	-.5143	-.5054	-.5159
.900		-.3399	-.5138	-.5152	-.4937

ALPHAO(3) = -.360 BETAO (4) = 4.080

SECTION (1) EFT VERTICAL DEPENDENT VARIABLE CP

X/CV \ Z/BV	.1580	.3160	.6000	.8400	.9250
.000	.5667	.4989	.4866	.4364	.4781
.025	-.1070	-.2940	-.5807	-.5962	-.6413
.050	-.1449	-.2940	-.5660	-.6033	-.6305
.150	.0049	-.1729	-.2483	-.4850	-.4991
.300	-.0319	-.1128	-.1323	-.1803	-.2818
.520	-.1502	-.1527	-.1473	-.1144	-.0758
.685	-.4219	-.5906	-.5286	-.5356	-.4884
.775	-.3165	-.4730	-.5484	-.5285	-.5106
.900		-.3691	-.5527	-.5301	-.5092

ARC11-716 IA14 O1+T12+S12N25 LEFT VERTICAL (RB1V50)

ALPHAO(3) = -.360 BETAO (3) = 8.120

SECTION (1)LEFT VERTICAL DEPENDENT VARIABLE CP

X/CV \ Z/BV	.1580	.3160	.6000	.8400	.9250
.000	.4762	.3751	.3482	.2557	.3134
.025	-.2472	-.3730	-.5515	-.6253	-.6772
.050	-.2762	-.3829	-.5607	-.6733	-.7120
.150	-.4096	-.3597	-.5194	-.5765	-.6697
.300	-.0032	-.3486	-.4611	-.4762	-.5871
.520	-.2045	-.3268	-.4431	-.4272	-.4084
.685	-.4553	-.6184	-.6503	-.6658	-.6481
.775	-.3773	-.5254	-.6476	-.6214	-.6601
.900		-.4603	-.5587	-.4581	-.5599

ALPHAO(4) = 4.010 BETAO (1) = -8.080

SECTION (1)LEFT VERTICAL DEPENDENT VARIABLE CP

X/CV \ Z/BV	.1580	.3160	.6000	.8400	.9250
.000	.4326	.2800	.2871	.2528	.1914
.025	.5294	.4328	.4820	.4617	.4527
.050	.4875	.3977	.4534	.4271	.4170
.150	.3519	.3225	.3468	.3517	.2891
.300	.2124	.2696	.2640	.2700	.2233
.520	.1713	.1409	.0956	.0840	-.0096
.685	-.4081	-.4704	-.4672	-.4533	-.4921
.775	-.3322	-.4455	-.4373	-.4356	-.4873
.900		-.3529	-.3988	-.4380	-.4716

ALPHAO(4) = 4.010 BETAO (2) = -4.030

SECTION (1)LEFT VERTICAL DEPENDENT VARIABLE CP

X/CV \ Z/BV	.1580	.3160	.6000	.8400	.9250
.000	.5365	.4046	.4308	.4195	.4140
.025	.3373	.2345	.2357	.2906	.2942
.050	.3446	.2392	.2543	.2750	.3057
.150	.2345	.1494	.1923	.2328	.2112
.300	.0941	.1067	.1488	.1753	.1740
.520	.0346	.0249	.0341	.0594	-.0438
.685	-.4378	-.5162	-.5010	-.4773	-.5275
.775	-.2810	-.5083	-.4935	-.4625	-.5315
.900		-.3230	-.4692	-.4758	-.5275

ORIGINAL PAGE IS OF POOR QUALITY

ARC11-716 IA14 O1+T12+S12N25 LEFT VERTICAL (RB1V50)

ALPHAO(4) = 4.050 BETAO (3) = .040

SECTION (1)LEFT VERTICAL DEPENDENT VARIABLE CP

Z/BV	.1580	.3160	.6000	.8400	.9250
X/CV					
.000	.5814	.4679	.4554	.4170	.4877
.025	-.0103	-.1081	-.2016	-.2120	-.1749
.050	.2182	-.0258	-.1815	-.1559	-.1633
.150	.1276	.0163	-.0125	.0483	.0461
.300	-.0132	-.0502	-.0181	.0356	.0615
.520	-.1010	-.0898	-.0781	-.0124	-.0756
.685	-.3714	-.5767	-.5312	-.5159	-.5277
.775	-.2722	-.4219	-.5395	-.5138	-.5405
.900		-.3415	-.5358	-.5273	-.5277

ALPHAO(4) = 4.050 BETAO (4) = 4.090

SECTION (1)LEFT VERTICAL DEPENDENT VARIABLE CP

Z/BV	.1580	.3160	.6000	.8400	.9250
X/CV					
.000	.5404	.4394	.4173	.3517	.4050
.025	-.1697	-.3334	-.5508	-.5986	-.6374
.050	-.2071	-.3416	-.5607	-.6131	-.6224
.150	-.0753	-.2008	-.2334	-.4988	-.5287
.300	-.0502	-.1402	-.1743	-.1661	-.2261
.520	-.1930	-.1801	-.1856	-.1430	-.1041
.685	-.3906	-.5923	-.5433	-.5298	-.5073
.775	-.2694	-.4374	-.5674	-.5306	-.5325
.900		-.3719	-.5688	-.5371	-.5373

ALPHAO(4) = 4.080 BETAO (5) = 6.170

SECTION (1)LEFT VERTICAL DEPENDENT VARIABLE CP

Z/BV	.1580	.3160	.6000	.8400	.9250
X/CV					
.000	.4254	.3036	.2708	.1562	.2254
.025	-.3532	-.4462	-.5582	-.6276	-.6857
.050	-.3754	-.4547	[illegible]	-.6665	-.7314
.150	-.4337	-.4438	[illegible]	.6134	-.6657
.300	-.1189	-.4202	[illegible]	-.5180	-.5186
.520	-.2744	-.3495	-.4712	-.4807	-.3532
.685	-.3044	-.5889	-.6597	-.6660	-.6475
.775	-.3060	-.4680	-.6330	-.5519	-.5916
.900		-.4585	-.5085	-.4613	-.4477

ARC11-716 IA14 01+T12+512:025 LEFT VERTICAL (RB1V50)

ALPHAO(5) = 8.080 BETAO (1) = -8.030

SECTION (1)LEFT VERTICAL DEPENDENT VARIABLE CP

Z/BV	.1580	.3160	.6000	.8400	.9250
X/CV					
.000	.4596	.2582	.2186	.2077	.1406
.025	.3206	.3742	.3988	.4169	.4121
.050	.3099	.3343	.3687	.3810	.3751
.150	.1899	.2450	.2705	.3194	.2564
.300	.0970	.1872	.2003	.2386	.1896
.520	.0205	.0784	.0479	.0558	-.0562
.685	-.5322	-.4937	-.4873	-.4620	-.5120
.775	-.3611	-.4812	-.4578	-.4654	-.5077
.900		-.4287	-.4143	-.4549	-.4970

ALPHAO(5) = 8.000 BETAO (2) = -3.980

SECTION (1)LEFT VERTICAL DEPENDENT VARIABLE CP

Z/BV	.1580	.3160	.6000	.8400	.9250
X/CV					
.000	.3527	.3716	.3551	.3589	.3237
.025	.2330	.1775	.1740	.2640	.2591
.050	.2937	.1903	.1948	.2479	.2399
.150	.1730	.1076	.1370	.2137	.1537
.300	.0301	.0554	.1015	.1420	.1132
.520	-.0034	.0054	-.0008	.0075	-.0874
.685	-.4795	-.5276	-.5162	-.5094	-.5454
.775	-.3141	-.5239	-.5060	-.4983	-.5508
.900		-.3422	-.4756	-.5051	-.5460

ALPHAO(5) = 7.910 BETAO (3) = .040

SECTION (1)LEFT VERTICAL DEPENDENT VARIABLE CP

Z/BV	.1580	.3160	.6000	.8400	.9250
X/CV					
.000	.5674	.4251	.3680	.3662	.3853
.025	-.0433	-.1447	-.2287	-.2115	-.2068
.050	.1696	-.0771	-.2424	-.1754	-.1928
.150	.0977	-.0253	-.0639	.0270	-.0081
.300	-.0550	-.0968	-.0834	-.0071	.0181
.520	-.1511	-.1317	-.1149	-.0581	-.1212
.685	-.3764	-.5052	-.5449	-.5384	-.5545
.775	-.2028	-.4131	-.5481	-.5392	-.5647
.900		-.3524	-.5344	-.5503	-.5550

ORIGINAL PAGE IS OF POOR QUALITY

ARC11-716 IA14 O6+T12+S12N25 LEFT VERTICAL (RB1V50)

ALPHAO(5) = 0.000 BETAO (4) = 4.130

SECTION (1)LEFT VERTICAL DEPENDENT VARIABLE CP

Z/BV	.1580	.3160	.6000	.8400	.9250
X/CV					
.000	.5309	.4005	.3510	.2998	.3323
.025	-.1127	-.3245	-.5397	-.5339	-.6398
.050	-.1478	-.3463	-.5587	-.6209	-.6348
.150	.0287	-.1633	-.2868	-.4853	-.5472
.300	-.0954	-.1704	-.2114	-.1738	-.1603
.520	-.2219	-.2209	-.1933	-.1785	-.1544
.685	-.3396	-.5557	-.5569	-.5561	-.5410
.775	-.2751	-.4037	-.5730	-.5585	-.5621
.900		-.4024	-.5368	-.5669	-.5688

ALPHAO(5) = 7.980 BETAO (5) = 8.220

SECTION (1)LEFT VERTICAL DEPENDENT VARIABLE CP

Z/BV	.1580	.3160	.6000	.8400	.9250
X/CV					
.000	.4400	.2746	.2055	.1117	.1551
.025	-.2911	-.4696	-.5794	-.6182	-.6674
.050	-.3232	-.4828	-.5879	-.6507	-.7136
.150	-.0837	-.4696	-.5665	-.6179	-.6485
.300	-.2240	-.3553	-.5144	-.5190	-.5411
.520	-.3584	-.3158	-.4711	-.5164	-.4096
.685	-.3985	-.4520	-.6060	-.5864	-.6156
.775	-.3182	-.4435	-.5431	-.5017	-.5047
.900		-.3145	-.4973	-.4639	-.4347

ARC11-718 IA14 OI+T12+S12N25 LEFT VERTICAL (RB1V51) (15 FEB 74)

REFERENCE DATA

BREF = 2.4210 SQ.FT. XMRP = 29.5800 INCHES
LREF = 38.7090 INCHES YMRP = .0000 INCHES
BREF = 38.7090 INCHES ZMRP = .0000 INCHES
SCALE = .0300 SCALE

PARAMETRIC DATA

MACH = 1.400 ELEVON = .000
RUDDER = .000 SPOERK = .000

ALPHAO(1) = -7.090 BETAO (1) = -8.050

SECTION (1)LEFT VERTICAL DEPENDENT VARIABLE CP

Z/BV	.1580	.3160	.6000	.8400	.9250
X/CV					
.000	.5897	.4763	.5298	.5618	.5030
.025	.7907	.7033	.7247	.7119	.7031
.050	.7417	.6587	.6914	.6781	.6610
.150	.5819	.5649	.5771	.5905	.5257
.300	.4593	.4907	.4823	.4958	.4576
.520	.3756	.3284	.2953	.2960	.1676
.685	-.1823	-.2699	-.2650	-.2799	-.3080
.775	-.2887	-.2587	-.2365	-.2546	-.3057
.900		-.1359	-.2036	-.2636	-.2867

ALPHAO(1) = -7.080 BETAO (2) = -4.010

SECTION (1)LEFT VERTICAL DEPENDENT VARIABLE CP

Z/BV	.1580	.3160	.6000	.8400	.9250
X/CV					
.000	.7255	.6403	.6940	.7082	.6885
.025	.6017	.4848	.4702	.5174	.5039
.050	.5904	.4814	.4886	.5050	.4981
.150	.4637	.3796	.4180	.4551	.4097
.300	.3067	.3176	.3656	.3863	.3760
.520	.2343	.2562	.2358	.2532	.1550
.685	-.2702	-.3294	-.2998	-.3197	-.3348
.775	-.3301	-.3202	-.2923	-.2973	-.3439
.900		-.2902	-.2826	-.3145	-.3404

ARC11-716 IA14 OL+T12+S12N25 LEFT VERTICAL (RB1V51)

ALPHAO(1) = -7.870 BETAO (3) = .020

SECTION (1)LEFT VERTICAL DEPENDENT VARIABLE CP

Z/BV	.1580	.3160	.6000	.8400	.9250
X/CV					
.000	.7801	.7290	.7390	.7250	.7901
.025	.2215	.0946	-.0194	-.0674	-.0343
.050	.4270	.2371	.0111	.0876	-.0146
.150	.3508	.2401	.2139	.2621	.2283
.300	.2057	.1651	.1885	.2174	.2854
.520	.0946	.1034	.1197	.1550	.1070
.685	-.3406	-.3823	-.3342	-.3371	-.3286
.775	-.3079	-.3807	-.3346	-.3314	-.3460
.900		-.3666	-.3400	-.3458	-.3305

ALPHAO(1) = -7.970 BETAO (4) = 4.110

SECTION (1)LEFT VERTICAL DEPENDENT VARIABLE CP

Z/BV	.1580	.3160	.6000	.8400	.9250
X/CV					
.000	.7272	.6655	.6861	.6355	.6801
.025	.0216	-.1455	-.4563	.4506	-.4627
.050	-.0117	-.1445	-.3997	-.4341	-.4746
.150	.1428	-.0575	-.1711	-.3053	-.3147
.300	.1103	.0289	.0064	-.2159	-.1834
.520	-.0034	-.0135	-.0214	-.0123	-.0673
.685	-.4095	-.4224	-.4068	-.3830	-.3460
.775	-.3415	-.4302	-.3992	-.3699	-.3657
.900		-.4095	-.3999	-.3763	-.3546

ALPHAO(1) = -7.990 BETAO (5) = 8.180

SECTION (1)LEFT VERTICAL DEPENDENT VARIABLE CP

Z/BV	.1580	.3160	.6000	.8400	.9250
X/CV					
.000	.5854	.4971	.5157	.4526	.5195
.025	-.1499	-.2509	-.3913	-.4888	-.5283
.050	-.1710	-.2637	-.3995	-.5332	-.5645
.150	-.3119	-.2621	-.3656	-.4555	-.4906
.300	.0456	-.2398	-.3218	-.3441	-.4094
.520	-.0666	-.2402	-.3238	-.2913	-.2971
.685	-.4478	-.4682	-.5111	-.5200	-.4950
.775	-.3480	-.4592	-.5089	-.5177	-.5134
.900		-.4500	-.4870	-.4617	-.5143

ARC11-T16 IA14 CR+T12+S12N25 LEFT VERTICAL (RB1V51)

ALPHA(2) = -5.000 BETA(1) = -8.060

SECTION (1)LEFT VERTICAL DEPENDENT VARIABLE CP

X/CV \ Z/BV	.1580	.3160	.6000	.8400	.9250
.000	.5507	.4014	.4458	.4658	.4061
.025	.7326	.6284	.5561	.6456	.6435
.050	.6848	.5609	.6216	.6107	.6019
.150	.5215	.4836	.5205	.5326	.4740
.300	.3[illegible]	.4332	.4359	.4491	.3945
.520	.3[illegible]	.2884	.2455	.2[illegible]	.1233
.695	-.[illegible]15	-.2944	-.2844	-.2[illegible]	-.3165
.775	-.2934	-.2743	-.2485	-.27[illegible]2	-.3193
.900		-.2240	-.2238	.2736	-.3137

ALPHA(2) = -3.990 BETA(2) = -4.030

SECTION (1)LEFT VERTICAL DEPENDENT VARIABLE CP

X/CV \ Z/BV	.1580	.3160	.6000	.8400	.9250
.000	.6702	.5225	.6156	.6193	.5997
.025	.5264	.4236	.4[illegible]	.4533	.4470
.050	.5255	.4206	.4225	.4534	.4408
.150	.4085	.3244	.3512	.3952	.3567
.300	.2496	.2495	.3124	.3507	.3232
.520	.1762	.1989	.1946	.2115	.1248
.695	.3094	-.3461	-.3177	-.3251	-.3441
.775	-.3522	-.3440	-.3089	-.3089	-.3557
.900		-.3231	-.3013	-.3274	-.3556

ALPHA(2) = -3.090 BETA(3) = .040

SECTION (1)LEFT VERTICAL DEPENDENT VARIABLE CP

X/CV \ Z/BV	.1580	.3160	.6000	.8400	.9250
.000	.7085	.5537	.6586	.6288	.6576
.025	.1637	.0479	-.0589	-.0952	-.0631
.050	.3340	.1353	-.0270	.0146	-.0392
.150	.2921	.1857	.1537	.2050	.1669
.300	.1522	.1059	.1339	.1612	.2180
.520	.0306	.0467	.0685	.1090	.0638
.695	-.3730	-.4012	-.3549	-.3440	-.3489
.775	-.2802	-.4007	-.3802	-.3440	-.3658
.900		-.3710	-.3619	-.3558	-.3556

ARC11-716 IA14 O1+T12+S12N25 LEFT VERTICAL (RB1V51)

ALPHAO(2) = -3.870 BETAO (4) = 4.090

SECTION (1)LEFT VERTICAL DEPENDENT VARIABLE CP

Z/BV	.1580	.3160	.6000	.8400	.9250
X/CV					
.000	.6624	.5957	.6025	.5491	.5949
.025	-.0903	-.1844	-.4530	-.4642	-.4786
.090	-.0349	-.1846	-.4164	-.4512	-.4900
.150	.0962	-.0954	-.2154	-.3331	-.3443
.300	.0675	-.0170	-.0259	-.2402	-.1931
.520	-.0919	-.0607	-.0584	-.0405	-.0478
.685	-.4252	.4438	-.4232	-.4004	-.3628
.775	-.5209	-.4571	-.4214	-.3910	-.3844
.900		-.5935	-.4285	-.3986	-.3883

ALPHAO(2) = -4.070 BETAO (5) = 8.150

SECTION (2)LEFT VERTICAL DEPENDENT VARIABLE CP

Z/BV	.1580	.3160	.6000	.8400	.9250
X/CV					
.000	.5280	.4200	.4300	.3495	.4183
.025	-.2245	-.2840	.4067	-.4926	-.5389
.090	-.2416	-.2898	-.4154	-.5360	-.5714
.150	-.3461	-.2944	-.3826	-.4562	-.5107
.300	.0150	-.3047	-.3498	-.3725	-.4449
.520	-.1062	-.2843	-.3506	-.3311	-.3017
.685	-.4527	-.4871	-.5239	-.5376	-.5044
.775	-.5455	-.4730	-.5186	-.5383	-.5236
.900		-.4429	-.4917	-.4196	-.5245

ALPHAO(3) = -.370 BETAO (1) = -8.100

SECTION (1 LEFT VERTICAL DEPENDENT VARIABLE CP

Z/BV	.1580	.3160	.6000	.8400	.9250
X/CV					
.000	.4973	.3396	.3720	.3745	.3162
.025	.6684	.5615	.5914	.5848	.5491
.090	.6241	.5106	.5860	.5492	.5475
.150	.4874	.4241	.4690	.4802	.4243
.300	.3107	.3798	.3935	.3873	.3668
.520	.2958	.2991	.2030	.2285	.0854
.685	-.2407	-.3038	-.3290	-.2936	-.3377
.775	-.3172	-.2840	-.2774	-.2941	-.3363
.900		-.2518	-.2452	-.2939	-.3239

ARC11-716 IA14 O1+T12+S12N25 LEFT VERTICAL (RB1V51)

ALPHAO(3) = -.390 BETAO (2) = -4.010

SECTION (1)LEFT VERTICAL DEPENDENT VARIABLE CP

Z/BV	.1580	.3160	.6000	.8400	.9250
X/CV					
.000	.5980	.5076	.5452	.5267	.5062
.025	.4620	.3668	.3490	.4005	.3786
.050	.4591	.3621	.3643	.3852	.3900
.150	.3471	.2671	.2988	.3467	.3051
.300	.1958	.1997	.2639	.2795	.2770
.520	.1352	.1552	.1548	.1727	.0885
.685	-.3439	-.3661	-.3425	-.3394	-.3649
.775	-.32[illegible]	-.3641	-.3350	-.3283	-.3743
.900		-.3451	-.3234	-.3439	-.3727

ALPHAO(3) = -.390 BETAO (3) = .030

SECTION (1)LEFT VERTICAL DEPENDENT VARIABLE CP

Z/BV	.1580	.3160	.6000	.8400	.9250
X/CV					
.000	.6238	.5960	.5911	.5496	.5746
.025	.1039	.0133	-.0823	-.1088	-.0827
.050	.1899	.0813	-.0509	-.0359	-.0641
.150	.2478	.1449	.1181	.1618	.1294
.300	.1140	.0752	.1006	.1196	.1529
.520	.0101	.0188	.0363	.0761	.0322
.685	-.3869	-.4129	-.3682	-.3642	-.3669
.775	-.2715	-.4107	-.3769	-.3617	-.3820
.900		-.3665	-.3760	-.3742	-.3758

ALPHAO(3) = -.400 BETAO (4) = 4.090

SECTION (1)LEFT VERTICAL DEPENDENT VARIABLE CP

Z/BV	.1580	.3160	.6000	.8400	.9250
X/CV					
.000	.6192	.5339	.5354	.4737	.5203
.025	-.0865	-.2142	-.4596	-.4596	-.4795
.050	-.1073	-.2137	-.4259	-.4530	-.4888
.150	.0316	-.1103	-.2316	-.3474	-.3633
.300	.0336	-.0415	-.0496	-.2526	-.2169
.520	-.0701	-.0824	-.0795	-.0815	-.0402
.685	-.4204	-.4807	-.4230	-.3965	-.3693
.775	-.3093	-.4807	-.4310	-.3942	-.3909
.900		-.3804	-.4384	-.4037	-.3967

ARC11-716 IA14 O1+T12+S12N25 LEFT VERTICAL (RB1V51)

ALPHAO(3) = -.400 BETAO (5) = 8.140

SECTION (1)LEFT VERTICAL DEPENDENT VARIABLE CP

Z/BV	.1580	.3160	.6000	.8400	.9250
X/CV					
.000	.4886	.3768	.3704	.2794	.3468
.025	-.2618	-.3096	-.4081	-.4649	-.5119
.050	-.2761	-.3158	-.4164	-.4975	-.5512
.150	-.3584	-.3193	-.3908	-.4535	-.5161
.300	.0121	-.3215	-.3606	-.3733	-.4133
.520	-.1321	-.2926	-.3544	-.3428	-.2367
.685	-.4238	-.4930	-.5213	-.5119	-.5198
.775	-.3211	-.4802	-.5183	-.5152	-.5362
.900		-.4225	-.4923	-.3987	-.5061

ALPHAO(4) = 4.110 BETAO (1) = -8.070

SECTION (1)LEFT VERTICAL DEPENDENT VARIABLE CP

Z/BV	.1580	.3160	.6000	.8400	.9250
X/CV					
.000	.4489	.2997	.3222	.2909	.2414
.025	.5613	.4799	.5120	.5066	.4856
.050	.5145	.4352	.4935	.4754	.4770
.150	.3591	.3295	.3987	.4209	.3650
.300	.2176	.2894	.3414	.3326	.3237
.520	.2219	.2212	.1627	.1908	.0530
.685	-.2861	-.3253	-.3247	-.3012	-.3477
.775	-.3193	-.3220	-.2987	-.3114	-.3452
.900		-.2912	-.2742	-.3067	-.3356

ALPHAO(4) = 4.100 BETAO (2) = -3.980

SECTION (1)LEFT VERTICAL DEPENDENT VARIABLE CP

Z/BV	.1580	.3160	.6000	.8400	.9250
X/CV					
.000	.5553	.4262	.4637	.4289	.4117
.025	.4162	.3078	.2642	.3250	.3004
.050	.4109	.3011	.2875	.3136	.3219
.150	.3008	.2069	.2263	.2806	.2405
.300	.1485	.1357	.1973	.2189	.2172
.520	.0847	.1127	.1074	.1256	.0481
.685	-.3773	-.3665	-.3615	-.3480	-.3773
.775	-.3249	-.3683	-.3559	-.3510	-.3865
.900		-.3596	-.3440	-.3617	-.3868

ARC11-716 IA14 OL+T12+S12N25 LEFT VERTICAL (RB1V51)

ALPHAO(4) = 4.100 BETAO (3) = .060

SECTION (1)LEFT VERTICAL DEPENDENT VARIABLE CP

Z/BV	.1580	.3160	.6000	.8400	.9250
X/CV					
.000	.5659	.5097	.4951	.4499	.4640
.025	-.0066	-.0397	-.1268	-.1457	-.1324
.050	.1731	.0008	-.1054	-.1143	-.1201
.150	.1826	.0839	.0543	.0930	.0646
.300	.0548	.0140	.0421	.0588	.0913
.520	-.0580	-.0304	-.0131	.0261	-.0149
.685	-.3785	-.4354	-.3910	-.3831	-.3943
.775	-.2646	-.4294	-.4004	-.3856	-.4079
.900		-.3297	-.4004	-.3956	-.4033

ALPHAO(4) = 4.100 BETAO (4) = 4.130

SECTION (1)LEFT VERTICAL DEPENDENT VARIABLE CP

Z/BV	.1580	.3160	.6000	.8400	.9250
X/CV					
.000	.5508	.4470	.4376	.3787	.4200
.025	-.0993	-.2407	-.4749	-.4832	-.5097
.050	-.1353	-.2498	-.4529	-.4843	-.5202
.150	-.0624	-.1569	-.2325	-.3865	-.3938
.300	.0090	-.0960	-.1063	-.2720	-.2584
.520	-.1185	-.1312	-.1346	-.1202	-.0811
.685	-.3898	-.4886	-.4418	-.4270	-.3965
.775	-.2941	-.4502	-.4588	-.4322	-.4195
.900		-.3620	-.4630	-.4425	-.4253

ALPHAO(4) = 4.090 BETAO (5) = 8.180

SECTION (1)LEFT VERTICAL DEPENDENT VARIABLE CP

Z/BV	.1580	.3160	.6000	.8400	.9250
X/CV					
.000	.4157	.3236	.3146	.2086	.2555
.025	-.3160	-.3712	-.4336	-.4935	-.5299
.050	-.3578	-.3783	-.4394	-.5256	-.5699
.150	-.4188	-.3712	-.4193	-.5131	-.5078
.300	-.0690	-.3645	-.3851	-.4151	-.3949
.520	-.2016	-.3128	-.3780	-.3955	-.2682
.685	-.3174	-.5014	-.5386	-.5399	-.5349
.775	-.2870	-.4172	-.5298	-.5374	-.5487
.900		-.3986	-.4684	-.4105	-.4407

ORIGINAL PAGE IS OF POOR QUALITY

ARC11-716 IA14 O1+T12+S12N25 LEFT VERTICAL (RB1V51)

ALPHAO(5) = 8.010 BETAO (1) = -8.050

SECTION (1)LEFT VERTICAL DEPENDENT VARIABLE CP

Z/BV	.1580	.3160	.6000	.8400	.9250
X/CV					
.000	.4028	.2686	.2820	.2299	.1822
.025	.4778	.4266	.4510	.4477	.4379
.050	.4457	.3839	.4314	.4169	.4196
.150	.2361	.2652	.3414	.3678	.3164
.300	.0891	.2237	.2950	.2819	.2916
.520	.1241	.1650	.1335	.1578	.0168
.685	-.3746	-.3368	-.3368	-.3126	-.3637
.775	-.3435	-.3412	-.3133	-.3256	-.3602
.900		-.3407	-.2898	-.3185	-.3503

ALPHAO(5) = 8.010 BETAO (2) = -4.010

SECTION (1)LEFT VERTICAL DEPENDENT VARIABLE CP

Z/BV	.1580	.3160	.6000	.8400	.9250
X/CV					
.000	.5733	.4052	.3728	.3412	.3166
.025	.3008	.2602	.2055	.2615	.2517
.050	.3435	.2584	.2202	.2480	.2599
.150	.2366	.1690	.1676	.2193	.1904
.300	.0928	.0902	.1486	.1644	.1629
.520	.0358	.0529	.0793	.0783	.0053
.685	-.4101	-.3860	-.3706	-.3631	-.3959
.775	-.3645	-.3849	-.3660	-.3745	-.4038
.900		-.3872	-.3519	-.3779	-.4051

ALPHAO(5) = 8.020 BETAO (3) = .030

SECTION (1)LEFT VERTICAL DEPENDENT VARIABLE CP

Z/BV	.1580	.3160	.6000	.8400	.9250
X/CV					
.000	.5464	.4583	.4067	.3628	.3761
.025	-.0678	-.0550	-.1376	-.1414	-.1397
.050	.0007	-.0135	-.1441	-.1378	-.1313
.150	.1741	.0513	.0157	.0529	.0259
.300	.0232	-.0229	.0079	.0191	.0770
.520	-.0835	-.0730	-.0510	-.0106	-.0536
.685	-.3863	-.4420	-.4087	-.3945	-.4104
.775	-.2693	-.4326	-.4179	-.4051	-.4258
.900		-.3271	-.4101	-.4124	-.4251

ARC11-716 IA14 O1+T12+S12N25 LEFT VERTICAL (RB1V51)

ALPHAO(5) = 8.010 BETAO (4) = 4.150

SECTION (1)LEFT VERTICAL DEPENDENT VARIABLE CP

Z/BV	.1580	.3160	.6000	.8400	.9250
X/CV					
.000	.5255	.4313	.3713	.2894	.3264
.025	-.1022	-.2315	-.4712	-.4872	-.5234
.050	-.1216	-.2521	-.4636	-.5011	-.5271
.150	.1260	-.1352	-.2128	-.4100	-.4225
.300	-.0336	-.1084	-.1435	-.1905	-.2576
.520	-.1528	-.1766	-.1710	-.1439	-.1083
.685	-.3361	-.5038	-.4475	-.4448	-.4165
.775	-.3058	-.4212	-.4680	-.4539	-.4400
.900		-.3473	-.4726	-.4603	-.4432

ALPHAO(5) = 7.990 BETAO (5) = 8.280

SECTION (1)LEFT VERTICAL DEPENDENT VARIABLE CP

Z/BV	.1580	.3160	.6000	.8400	.9250
X/CV					
.000	.3743	.2821	.2529	.1330	.1819
.025	-.2421	-.3561	-.4442	-.4891	-.5194
.050	-.2671	-.3643	-.4525	-.5198	-.5565
.150	-.1114	-.3575	-.4380	-.4996	-.5120
.300	-.1762	-.3453	-.3977	-.4290	-.4413
.520	-.2762	-.2655	-.3818	-.4254	-.3367
.685	-.3659	-.4291	-.5263	-.5408	-.5167
.775	-.3048	-.3545	-.4852	-.4536	-.4538
.900		-.3058	-.4527	-.3908	-.3909

ARC11-716 IA14 OI+T12+S12N25+AT11 RIGHT VERTICAL (RB1R17) (03 OCT 73)

REFERENCE DATA

SREF = 2.4210 SQ.FT. XMRP = 29.5800 INCHES
LREF = 38.7090 INCHES YMRP = .0000 INCHES
BREF = 38.7090 INCHES ZMRP = .0000 INCHES
SCALE = .0300 SCALE

PARAMETRIC DATA

BETAO = .000 ELEVON = .000
RUDDER = .000 SPDBRK = .000

MACH (1) = .898 ALPHAO(1) = -8.170

SECTION (1)RIGHT VERTICAL DEPENDENT VARIABLE CP

Z/BV	.1580	.3160	.6000	.8400	.9250
X/CV					
.000	.5294	.4942	.5681	.5427	.5464
.050	.1027	-.0924	-.1828	-.0371	-.2144
.150	.0246	-.0096	-.0453	-.0789	-.1028
.300	-.0524	-.0707	-.1152	-.1472	-.1765
.520	-.1942	-.2771	-.3023	-.3212	-.3606
.685	-.4027	-.6949	-1.1640	-.7807	-.6518
.775	-.3000	-.4453	-.6674	-.5083	-.3568
.900		-.3370	-.3966	-.3253	-.2297

MACH 1) = .898 ALPHAO(2) = -4.140

SECTION (1)RIGHT VERTICAL DEPENDENT VARIABLE CP

Z/BV	.1580	.3160	.6000	.8400	.9250
X/CV					
.000	.4596	.4046	.4998	.470[illegible]	.4752
.050	.0403	-.1397	-.1910	-.0336	-.1491
.150	-.0508	-.0538	-.0770	-.1047	-.1229
.300	-.1125	-.1103	-.1480	-.1780	-.1993
.520	-.2270	-.2956	-.3305	-.3522	-.3806
.685	-.3773	-.6297	-1.1840	-.7434	-.5696
.775	-.2865	-.3892	-.6234	-.4726	-.3140
.900		-.3260	-.3524	-.3105	-.2064

MACH (1) = .898 ALPHAO(3) = -.220

SECTION (1)RIGHT VERTICAL DEPENDENT VARIABLE CP

Z/BV	.1580	.3160	.6000	.8400	.9250
X/CV					
.000	.4085	.3351	.4389	.4085	.4120
.050	-.0261	-.2473	-.1961	-.0673	-.1405
.150	-.1357	-.1045	-.0947	-.1347	-.1336
.300	-.1643	-.1384	-.1575	-.2009	-.2130
.520	-.2450	-.2963	-.3434	-.3747	-.3913
.685	-.3408	-.5812	-1.0440	-.6680	-.4415

ARC11-716 IA14 O1+T12+S12N25+AT11 RIGHT VERTICAL (RB1R17)

MACH (1) = .898 ALPHAO(3) = -.220

SECTION (1)RIGHT VERTICAL DEPENDENT VARIABLE CP

Z/BV	.1580	.3160	.6000	.8400	.9250
X/CV					
.775	-.2624	-.3516	-.5439	-.4364	-.2923
.900		-.3073	-.2842	-.2787	-.1737

MACH (1) = .898 ALPHAO(4) = 3.830

SECTION (1)RIGHT VERTICAL DEPENDENT VARIABLE CP

Z/BV	.1580	.3160	.6000	.8400	.9250
X/CV					
.000	.3656	.2597	.3791	.3415	.3487
.050	-.0971	-.2999	-.2063	-.0923	-.1551
.150	-.1787	-.1329	-.1098	-.1453	-.1496
.300	-.1895	-.1518	-.1639	-.2164	-.2292
.520	-.2555	-.2928	-.3555	-.3844	-.4029
.685	-.2930	-.5282	-.8283	-.5965	-.3729
.775	-.2441	-.3355	-.4834	-.3981	-.2577
.900		-.2750	-.2233	-.2482	-.1431

MACH (1) = .898 ALPHAO(5) = 8.030

SECTION (1)RIGHT VERTICAL DEPENDENT VARIABLE CP

Z/BV	.1580	.3160	.6000	.8400	.9250
X/CV					
.000	.2508	.2130	.3418	.2957	.2942
.050	-.1597	-.1603	-.2018	-.0976	-.1555
.150	-.1807	-.1274	-.1144	-.1383	-.1478
.300	-.1815	-.1617	-.1877	-.2062	-.2265
.520	-.2425	-.2908	-.3392	-.3865	-.4027
.685	-.2539	-.4416	-.7058	-.5331	-.3305
.775	-.2223	-.2936	-.4035	-.3591	-.2125
.900		-.2464	-.1743	-.2168	-.0942

ARC11-716 IA14 O1+T12+S12N25+AT11 RIGHT VERTICAL (RB1R17)

MACH (2) = .977 ALPHAO(1) = -7.920

SECTION (1)RIGHT VERTICAL DEPENDENT VARIABLE CP

Z/BV	.1580	.3160	.6000	.8400	.9250
X/CV					
.000	.5754	.5273	.5972	.5746	.5751
.050	.1573	-.1293	-.1811	-.1370	-.2449
.150	.0755	.0429	.0181	-.0055	-.0168
.300	-.0079	-.0047	-.0490	-.0645	-.0919
.520	-.1041	-.1782	-.2167	-.2073	-.2601
.685	-.4659	-.8606	-.9433	-.8761	-.8973
.775	-.3741	-.5551	-.9019	-.8729	-.8870
.900		-.4324	-.6548	-.8101	-.6838

MACH (2) = .976 ALPHAO(2) = -3.880

SECTION (1)RIGHT VERTICAL DEPENDENT VARIABLE CP

Z/BV	.1580	.3160	.6000	.8400	.9250
X/CV					
.000	.5242	.4297	.5093	.4794	.4867
.050	.0864	-.2242	-.2187	-.1655	-.2456
.150	-.0040	-.0722	-.0360	-.0708	-.0707
.300	-.1292	-.0614	-.1004	-.1401	-.1470
.520	-.1556	-.2225	-.2700	-.2723	-.3108
.685	-.4634	-.8183	-.9641	-.9202	-.9201
.775	-.3567	-.5322	-.9261	-.9292	-.9167
.900		-.4225	-.5301	-.6568	-.4625

MACH (2) = .977 ALPHAO(3) = .090

SECTION (1)RIGHT VERTICAL DEPENDENT VARIABLE CP

Z/BV	.1580	.3160	.6000	.8400	.9250
X/CV					
.000	.4856	.3590	.4150	.3933	.4059
.050	.0412	-.2906	-.2813	-.1933	-.2524
.150	-.0532	-.1433	-.0863	-.1125	-.1074
.300	-.1947	-.1814	-.1450	-.1757	-.1927
.520	-.2438	-.2577	-.3118	-.3045	-.3479
.685	-.4526	-.7578	-.9700	-.9166	-.9351
.775	-.3429	-.9006	-.9359	-.9359	-.9045
.900		-.4370	-.5070	-.5348	-.4339

ARC11-716 IA14 OL+T12+S12N25+AT11 RIGHT VERTICAL (RB1R17)

MACH (2) = .973 ALPHAO(4) = 4.020

SECTION (1)RIGHT VERTICAL DEPENDENT VARIABLE CP

X/CV \ Z/BV	.1580	.3160	.6000	.8400	.9250
.000	.4383	.2899	.3060	.2937	.3072
.050	-.0176	-.3561	-.3843	-.2554	-.2909
.150	.1221	-.2192	-.1714	-.1835	-.1636
.300	-.2715	-.2758	-.2120	-.2325	-.2538
.520	-.3221	-.3231	-.3671	-.3614	-.3388
.685	.4340	-.6248	-1.0070	-.9440	-.9095
.775	-.3108	-.6574	-.7500	-.7021	-.5701
.900		.4418	-.4808	-.4877	-.2765

MACH (3) = .977 ALPHAO(5) = 8.030

SECTION (1)RIGHT VERTICAL DEPENDENT VARIABLE CP

X/CV \ Z/BV	.1580	.3160	.6000	.8400	.9250
.000	.3869	.2423	.2281	.2544	.2297
.050	-.1028	-.3714	-.4506	-.3089	-.3524
.150	-.1633	-.2651	-.2510	.2233	-.2068
.300	-.3106	-.3234	-.2563	-.2627	-.2908
.520	-.3634	-.3648	-.4001	-.3960	-.4116
.685	-.4132	-.5407	-.9906	-.8939	-.7880
.775	-.3065	-.4565	-.5833	-.5987	.4267
.900		-.4065	-.4053	-.4710	-.2756

MACH (3) = 1.102 ALPHAO(1) = -7.940

SECTION (1)RIGHT VERTICAL DEPENDENT VARIABLE CP

X/CV \ Z/BV	.1580	.3160	.6000	.8400	.9250
.000	.6322	.6168	.6759	.6635	.6708
.050	.2645	-.0262	-.0768	-.0362	-.0806
.150	.2010	.1231	.1425	.1289	.1267
.300	.0882	.0761	.0980	.0618	.0506
.520	.0016	-.0141	-.0753	-.0537	-.0852
.685	-.4775	-.6747	-.6935	-.6609	-.6538
.775	-.3702	-.5970	-.6586	-.6558	-.6525
.900		-.4215	-.6516	-.6671	-.6269

ARC11-716 IA14 OI+T12+S12N25+AT11 RIGHT VERTICAL (RB1R17)

MACH (3) = 1.101 ALPHAO(2) = -5.090

SECTION (1)RIGHT VERTICAL DEPENDENT VARIABLE CP

Z/BV	.1580	.3160	.6000	.8400	.9250
X/CV					
.000	.6470	.5518	.5844	.5772	.5900
.050	.2008	-.0768	-.1289	-.0629	-.0820
.150	.1505	.0654	.0703	.0781	.0868
.300	.0098	.0047	.0481	.0213	.0041
.520	-.0537	-.0734	-.1190	-.0960	-.1244
.685	-.4430	-.6877	-.7034	-.6736	-.6743
.775	-.5411	-.5456	-.6784	-.6747	-.6787
.900		-.4045	-.6471	-.6873	-.6655

MACH (3) = 1.103 ALPHAO(3) = .090

SECTION (1)RIGHT VERTICAL DEPENDENT VARIABLE CP

Z/BV	.1580	.3160	.6000	.8400	.9250
X/CV					
.000	.8085	.4926	.5059	.4959	.5173
.050	.1457	-.1110	-.1778	-.1011	-.0980
.150	.1135	.0147	.0166	.0344	.0522
.300	-.0256	-.0525	-.0046	-.0792	-.0354
.520	-.1034	-.1104	-.1548	-.1331	-.1581
.685	-.4299	-.7050	-.7167	-.6867	-.6910
.775	-.5229	-.5033	-.6940	-.6881	-.7000
.900		-.3907	-.6536	-.7069	-.6959

MACH (3) = 1.100 ALPHAO(4) = 4.060

SECTION (1)RIGHT VERTICAL DEPENDENT VARIABLE CP

Z/BV	.1580	.3160	.6000	.8400	.9250
X/CV					
.000	.5593	.4237	.4132	.3853	.4126
.050	.0888	-.1370	-.2356	-.1877	-.1818
.150	.0966	-.0499	-.0522	-.0413	-.0134
.300	-.0873	-.1135	-.0830	-.0845	-.0865
.520	-.1654	-.1729	-.2101	-.1812	-.2005
.685	-.4440	-.7105	-.7345	-.6956	-.7136
.775	-.5294	-.4750	-.7187	-.7167	-.7268
.900		-.3987	-.6609	-.7205	-.7247

AF 11-7:6 TA14 C1+T12+S12N25+AT11 RIGHT VERTICAL (RB1R17)

MACH ( ) = 1.099 ALPHA(5) = 8.020

SECTION (1)RIGHT VERTICAL DEPENDENT VARIABLE CP

Z/SV	.1580	.3160	.6000	.8400	.9250
X/CV					
.000	.5518	.5931	.3310	.2912	.3211
.090	.0363	-.1918	-.2862	-.2346	-.2391
.150	.0187	-.1049	-.1148	-.0960	-.0691
.300	-.1474	-.1773	-.1412	-.1262	-.1431
.520	-.2145	-.2159	-.2580	-.2507	-.2496
.685	-.4468	-.7115	-.7544	-.7111	-.7358
.775	-.3436	-.4804	-.7452	-.7415	-.7565
.900		-.4313	-.6002	-.7425	-.7544

MACH (4) = 1.248 ALPHA(1) = 7.940

SECTION (1)RIGHT VERTICAL DEPENDENT VARIABLE CP

Z/SV	.1580	.3160	.6000	.8400	.9250
X/CV					
.000	.7650	.6177	.6998	.7016	.7220
.090	.2737	.0699	-.0233	-.0209	-.0220
.150	.2928	.1822	.1738	.1978	.2128
.300	.1512	.1280	.1424	.1591	.1476
.520	.0570	.0488	.0156	.0262	.0191
.685	-.4283	-.5018	-.4877	-.4502	-.4556
.775	-.3353	-.5095	-.4736	-.4557	-.462[illegible]
.900		-.4102	-.4476	-.4730	-.45[illegible]2

MACH (4) = 1.248 ALPHA(2) = -3.840

SECTION (1)RIGHT VERTICAL DEPENDENT VARIABLE CP

Z/SV	.1580	.3160	.6000	.8400	.9250
X/CV					
.000	.7129	.6117	.6191	.6049	.6305
.090	.2185	.0307	-.0581	-.0610	-.0536
.150	.2408	.1330	.1180	.1429	.1711
.300	.1027	.0728	.0463	.1108	.0965
.520	.0034	.0007	-.0330	-.0172	-.0220
.685	-.4214	-.5203	-.5095	-.4669	-.4821
.775	-.3084	-.5245	-.4971	-.4803	-.4927
.900		-.3628	-.4635	-.4959	-.4924

ORIGINAL PAGE IS OF POOR QUALITY

[illegible]

[illegible] 16 [illegible] 2+512NES+AT11 RIGHT VERTICAL [illegible]

MACH [illegible] = 1.244 ALPHA(DEG) = .050

SECTION 1 RIGHT VERTICAL DEPENDENT VARIABLE CP

Z/BV	.1590	.3180	.6000	.8400	.9250
X/CV					
.000	.8492	.5491	.5464	.5155	.5446
.050	.1559	-.0085	-.0982	-.0990	-.0806
.150	[illegible]	[illegible]	.0667	.0914	.1234
.500	[illegible]	[illegible]	.0379	.0640	.0536
.620	[illegible]	[illegible]	[illegible]	[illegible]	-.0602
.685	[illegible]	[illegible]	-.5232	.4774	-.4967
.775	[illegible]	[illegible]	[illegible]	[illegible]	[illegible]
[illegible]		[illegible]	.4748	.5062	-.5004

MACH [illegible] = [illegible] ALPHA(DEG) = 4.010

SECTION [illegible] DEPENDENT VARIABLE CP

Z/[illegible]	[illegible]	[illegible]	[illegible]	[illegible]	.9250
X/[illegible]					
[illegible]	[illegible]	[illegible]	[illegible]	[illegible]	.4485
[illegible]	[illegible]	[illegible]	[illegible]	[illegible]	[illegible]
[illegible]	[illegible]	[illegible]	[illegible]	[illegible]	[illegible]
[illegible]	[illegible]	[illegible]	[illegible]	[illegible]	[illegible]
[illegible]	[illegible]	[illegible]	[illegible]	[illegible]	[illegible]
[illegible]	[illegible]	[illegible]	[illegible]	[illegible]	[illegible]
[illegible]	[illegible]	[illegible]	[illegible]	[illegible]	[illegible]
[illegible]	[illegible]	[illegible]	[illegible]	[illegible]	[illegible]

[illegible] ALPHA(DEG) = [illegible]

SECTION [illegible] DEPENDENT VARIABLE CP

[illegible]	.1590	.3180	[illegible]	[illegible]	.9250
X/[illegible]					
[illegible]	.5472	.4269	.5494	.5514	[illegible]
[illegible]	[illegible]	[illegible]	.1723	.1724	.1247
[illegible]	[illegible]	[illegible]	[illegible]	[illegible]	.4487
[illegible]	[illegible]	[illegible]	[illegible]	[illegible]	[illegible]
[illegible]	-.1241	[illegible]	[illegible]	[illegible]	[illegible]
[illegible]	-.3952	-.5589	-.5472	[illegible]	-.5248
[illegible]	-.2852	-.4312	[illegible]	[illegible]	[illegible]
[illegible]		-.5492	-.4645	[illegible]	[illegible]

[illegible]

[illegible]

[illegible]

[illegible]

MACH [illegible] = .897 BETA [illegible] = [illegible]

SECTION [illegible] VERTICAL DEPENDENT VARIABLE CP

Z/B =	[illegible]	.5160	.6000	.8400	.9250
X/C =					
.779	[illegible]	.5654	-.5590	-.4409	-.2845
.900	[illegible]	[illegible]	-.3022	-.2758	.1795

MACH [illegible] = .896 BETA [illegible] = 4.100

SECTION [illegible] VERTICAL DEPENDENT VARIABLE CP

Z/B =	[illegible]	[illegible]	.6000	.8400	.9250
X/C =					
[illegible]	[illegible]	[illegible]	[illegible]	[illegible]	.2795
[illegible]	[illegible]	[illegible]	[illegible]	[illegible]	.1257
[illegible]	[illegible]	[illegible]	[illegible]	[illegible]	.0142
[illegible]	[illegible]	[illegible]	[illegible]	[illegible]	[illegible]
[illegible]	[illegible]	[illegible]	[illegible]	[illegible]	[illegible]
[illegible]	[illegible]	[illegible]	[illegible]	[illegible]	[illegible]
[illegible]	[illegible]	[illegible]	[illegible]	[illegible]	.4571
[illegible]	[illegible]	[illegible]	[illegible]	[illegible]	[illegible]

[illegible]

SECTION [illegible] VERTICAL DEPENDENT VARIABLE CP

Z/B =	[illegible]	[illegible]	.6000	[illegible]	.9250
X/C =					
[illegible]	[illegible]	[illegible]	[illegible]	.1759	[illegible]
[illegible]	.5973	.5736	.5106	.5214	[illegible]
[illegible]	[illegible]	[illegible]	.2016	.1865	[illegible]
[illegible]	[illegible]	[illegible]	[illegible]	[illegible]	[illegible]
[illegible]	-.0449	-.1852	-.1851	[illegible]	-.3632
[illegible]	[illegible]	[illegible]	-.6745	[illegible]	[illegible]
.779	-.2921	[illegible]	-.4044	.5486	-.1497
[illegible]	[illegible]	[illegible]	[illegible]	-.4661	[illegible]

APPL. 716 (A14 (1+1)+S12N25+AT11 RIGHT VERTICAL (RB1R18)

MACH (1) = .973 BETAO (1) = -8.050

SECTION (1)RIGHT VERTICAL DEPENDENT VARIABLE CP

Z/BV	.1580	.3160	.6000	.8400	.9250
X/CV					
.000	.3054	.1362	.0972	.1127	.3116
.050	-.5531	-.7305	-.9311	-1.0450	-1.0440
.150	-.6465	-.7688	-.9661	-1.0390	-1.0290
.300	-.5217	-.6935	-.9117	-.9577	-.9089
.520	-.5125	-.5683	-.8711	-.7479	-.7356
.685	-.5550	-.6416	-.7911	-.6701	-.6351
.775	-.3357	-.6896	-.7931	-.6671	-.6202
.900		-.4355	-.6606	-.6712	-.6144

MACH (2) = .976 BETAO (2) = -4.010

SECTION (1)RIGHT VERTICAL DEPENDENT VARIABLE CP

Z/BV	.1580	.3160	.6000	.8400	.9250
X/CV					
.000	.4281	.3030	.3081	.3176	.2513
.050	-.4071	-.6248	-.8217	-.9072	-.8969
.150	-.1985	-.3928	-.6589	-.7902	-.8461
.300	-.3203	-.3754	-.4989	-.5918	-.6595
.520	-.4019	-.4099	-.4533	-.5211	-.5003
.685	-.5036	-.6225	-.9761	-.8483	-.7640
.775	-.3326	-.5507	-.6222	-.5883	-.5241
.900		-.4733	-.4775	-.4750	-.4069

MACH (2) = .975 BETAO (3) = .040

SECTION (1)RIGHT VERTICAL DEPENDENT VARIABLE CP

Z/BV	.1580	.3160	.6000	.8400	.9250
X/CV					
.000	.4807	.3593	.4238	.3944	.4031
.050	.0263	-.3096	-.3076	-.2466	-.2850
.150	-.0622	-.1535	-.0941	-.1254	-.1135
.300	-.2036	-.1878	-.1504	-.1797	-.1961
.520	-.2493	-.2800	-.3190	-.3132	-.3506
.685	-.4518	-.7479	-.9838	-.9317	-.9406
.775	-.3396	-.4918	-.9495	-.9506	-.8772
.900		-.4394	-.5044	-.5335	-.4060

ARC11-716 TA14 O1+T12+S12N25+AT11 RIGHT VERTICAL (RB1R16)

MACH (2) = .976 BETAO (4) = 4.070

SECTION (1)RIGHT VERTICAL DEPENDENT VARIABLE CP

Z/BV	.1580	.3160	.6000	.8400	.9250
X/CV					
.000	.4283	.3306	.2981	.2082	.2485
.050	.2089	.1424	.1632	.1796	.1276
.150	.0894	.0811	.0870	.0904	.0436
.300	.0073	.0074	-.0077	-.0220	-.0934
.520	-.1145	-.1756	-.1903	-.2546	-.3496
.685	-.4384	-.7317	-.9421	-.8861	-.9217
.775	-.3242	-.4480	-.8589	-.8845	-.9372
.900		-.3326	-.4968	-.8761	-.7872

MACH (2) = .974 BETAO (5) = 8.120

SECTION (1)RIGHT VERTICAL DEPENDENT VARIABLE CP

Z/BV	.1580	.3160	.6000	.8400	.9250
X/CV					
.000	.3012	.1506	.0812	-.0429	.0386
.050	.4138	.3899	.3602	.3365	.2696
.150	.2939	.2792	.2420	.2187	.1544
.300	.1982	.1674	.1228	.0783	-.0142
.520	.0179	-.0692	-.1067	-.2034	-.3466
.685	-.3883	-.6622	-.8683	-.8375	-.8882
.775	-.3202	-.3920	-.7608	-.8381	-.8819
.900		-.2911	-.3060	-.7325	-.7954

MACH (3) = 1.102 BETAO (1) = -8.090

SECTION (1)RIGHT VERTICAL DEPENDENT VARIABLE CP

Z/BV	.1580	.3160	.6000	.8400	.9250
X/CV					
.000	.4118	.2603	.2361	.2601	.1808
.050	-.3866	-.5307	-.7413	-.8303	-.9007
.150	-.5330	-.5561	-.7351	-.8059	-.8883
.300	-.1458	-.4956	-.6813	-.7211	-.7133
.520	-.3357	-.4250	-.6610	-.6918	-.5715
.685	-.5422	-.6519	.8647	-.6056	-.6011
.775	-.3522	-.5890	-.7286	-.5792	-.5173
.900		-.5384	-.5712	-.5822	-.4812

M011-715 TA14 CA+T12+S12N25+A711 RIGHT VERTICAL (RB1R18)

MACH (2) = 1.150 BETAO (2) = -4.010

SECTION (1)RIGHT VERTICAL DEPENDENT VARIABLE CP

Z/BV	.1580	.3160	.6000	.8400	.9250
X/CV					
.000	.5481	.4148	.4363	.4309	.3855
.050	-.2252	-.4340	-.6549	-.8168	-.8436
.150	-.0512	-.2399	-.4505	-.7310	-.7573
.300	-.1419	-.2119	-.3011	-.3024	-.3722
.520	-.2456	-.2623	-.3001	-.3148	-.2207
.685	-.4872	-.7152	-.7586	-.7152	-.7107
.775	-.3515	-.5131	-.7476	-.7330	-.7221
.900		-.4761	-.5192	-.7273	-.7174

MACH (3) = 1.102 BETAO (3) = .030

SECTION (1)RIGHT VERTICAL DEPENDENT VARIABLE CP

Z/BV	.1580	.3160	.6000	.8400	.9250
X/CV					
.000	.6094	.4967	.5098	.5018	.5252
.050	.1247	-.1284	-.2000	-.1515	-.1389
.150	.1066	.0023	.0081	.0302	.0465
.300	-.0384	-.0608	-.0159	-.0170	-.0358
.520	-.1144	-.1189	-.1561	-.1319	-.1568
.685	-.4373	-.7085	-.7147	-.6773	-.6875
.775	-.3329	-.5054	-.6936	-.6899	-.6960
.900		-.3942	-.6565	-.6991	-.6911

MACH (3) = 1.100 BETAO (4) = 4.090

SECTION (1)RIGHT VERTICAL DEPENDENT VARIABLE CP

Z/BV	.1580	.3160	.6000	.8400	.9250
X/CV					
.000	.5462	.4455	.4246	.3385	.3825
.050	.3300	.2302	.2644	.2656	.2338
.150	.2091	.1782	.1958	.1958	.1677
.300	.1017	.1271	.1133	.1045	.0435
.520	.0209	-.0262	-.0524	-.0950	-.1691
.685	-.4819	-.6525	-.6986	-.6736	-.6877
.775	-.3367	-.5698	-.6465	-.6646	-.7090
.900		-.3625	-.5858	-.6623	-.7143

ARC11-716 IA14 O1+T12+S12N25+AT11 RIGHT VERTICAL (RB1R18)

MACH (3) = 1.100 BETAO (3) = 8.130

SECTION (1)RIGHT VERTICAL DEPENDENT VARIABLE CP

Z/BV	.1580	.3160	.6000	.8400	.9250
X/CV					
.000	.4080	.2848	.2376	.1407	.2016
.050	.5124	.4686	.4351	.4235	.3777
.150	.3831	.3606	.3249	.3239	.2791
.300	.2881	.2611	.2077	.2073	.1296
.520	.1350	.0599	.0350	-.0327	-.1557
.685	-.4432	-.6009	-.6181	-.6334	-.6615
.775	-.3307	-.4799	-.5676	-.6085	-.6494
.900		-.2872	-.4727	-.5669	-.6344

MACH (4) = 1.252 BETAO (1) = -8.080

SECTION (1)RIGHT VERTICAL DEPENDENT VARIABLE CP

Z/BV	.1580	.3160	.6000	.8400	.9250
X/CV					
.000	.5021	.3478	.3570	.3537	.2897
.050	-.3010	-.3630	-.5387	-.6500	-.7162
.150	-.4219	-.3783	-.5421	-.6258	-.6929
.300	.0092	-.3687	-.4828	-.5312	-.5268
.520	-.1982	-.3377	-.4724	-.5088	-.3987
.685	-.4594	-.5718	-.6672	-.6386	-.6570
.775	-.3448	-.5055	-.6418	-.5754	-.6267
.900		-.4556	-.4877	-.4901	-.4450

MACH (4) = 1.244 BETAO (2) = -4.030

SECTION (1)RIGHT VERTICAL DEPENDENT VARIABLE CP

Z/BV	.1580	.3160	.6000	.8400	.9250
X/CV					
.000	.6003	.4777	.5079	.5129	.4864
.050	-.1389	-.3012	-.5014	-.5850	-.6234
.150	-.0151	-.1806	-.2960	-.5002	-.5197
.300	-.0245	-.1060	-.1541	-.1889	-.3494
.520	-.1384	-.1349	-.1766	-.1440	-.0570
.685	-.4062	-.5628	-.5617	-.4987	-.4936
.775	-.2948	-.4419	-.5547	-.5202	-.4978
.900		-.3644	-.5076	-.5189	-.5069

APOLLO 204 C1+T(2+312N25+AT11 RIGHT VERTICAL (RB1P18)

MACH 1.246 BETAO (3) = .030

SECTION 1 RIGHT VERTICAL DEPENDENT VARIABLE CP

Z/BV	.1580	.3160	.6000	.8400	.9250
X/CV					
.000	.6541	.5159	.5527	.5241	.5338
.050	.1508	-.0118	-.1075	-.1165	-.1121
.150	.1834	.0903	.0679	.0943	.1181
.300	.0611	.0224	.0409	.0698	.0547
.520	-.0398	-.0407	-.0701	-.1493	-.0570
.685	-.3414	-.3279	-.3163	-.4702	-.4921
.775	-.2868	-.5127	-.5089	-.4902	-.5081
.900		-.3527	-.4648	-.4999	-.5094

MACH (4) = 1.246 BETAO (4) = 4.090

SECTION 1)RIGHT VERTICAL DEPENDENT VARIABLE CP

Z/BV	.1580	.3160	.6000	.8400	.9250
X/CV					
.000	.6093	.5027	.4872	.4379	.4825
.050	.4196	.3079	.3088	.3312	.3197
.150	.2983	.2327	.2543	.2731	.2615
.300	.1644	.1696	.1908	.2012	.1560
.520	.0871	.0648	.0500	.0407	-.0196
.685	-.4459	-.4877	-.4958	-.4591	-.4720
.775	-.2843	-.4875	-.4611	-.4633	-.4973
.900		-.3274	-.4055	-.4586	-.5055

MACH (4) = 1.248 BETAO (5) = 8.150

SECTION (1)RIGHT VERTICAL DEPENDENT VARIABLE CP

Z/BV	.1580	.3160	.6000	.8400	.9250
X/CV					
.000	.4967	.3801	.3571	.2995	.3182
.050	.5682	.5107	.5043	.4845	.4805
.150	.4226	.4152	.4082	.4023	.3722
.300	.3280	.3302	.3068	.3069	.2357
.520	.2189	.1778	.1453	.1010	-.0086
.685	-.3778	-.4195	-.4225	-.4367	-.4614
.775	-.2849	-.4125	-.3988	-.4186	-.4611
.900		-.2794	-.3322	-.3881	-.4556

ARC11-716 IA14 O1+T12+S12N25+AT10 RIGHT VERTICAL (RB1R24) (27 SEP 73)

REFERENCE DATA

SREF =	2.4210	SQ.FT.	XMRP =	29.5000	INCHES
LREF =	38.7090	INCHES	YMRP =	.0000	INCHES
BREF =	38.7090	INCHES	ZMRP =	.0000	INCHES
SCALE =	.0300	SCALE			

PARAMETRIC DATA

ALPHAO =	-10.000	ELEVON =	.000
RUDDER =	.000	SPDBRK =	.000

MACH (1) = .902 BETAO (1) = -9.890

SECTION (1)RIGHT VERTICAL DEPENDENT VARIABLE CP

Z/BV	.1580	.3160	.6000	.8400	.9250
X/CV					
.000	.1654	.0258	.0691	.1943	.0868
.050	-.7239	-.9054	-1.1260	-.7503	-.6289
.150	-.9524	-.9189	-1.0940	-.7246	-.6306
.300	-.3064	-.9284	-1.0520	-.7031	-.6024
.520	-.5313	-.7800	-.9113	-.6437	-.5654
.685	-.5083	-.7915	-.8138	-.5564	-.4529
.775	-.3021	-.6351	-.7511	-.5139	-.4398
.900		-.3863	-.6392	-.4931	-.4236

MACH (1) = .899 BETAO (2) = 10.090

SECTION (1)RIGHT VERTICAL DEPENDENT VARIABLE CP

Z/BV	.1580	.3160	.6000	.8400	.9250
X/CV					
.000	.1559	-.0169	.0205	-.0545	.0943
.050	.6027	.5675	.5078	.4822	.4117
.150	.4685	.4421	.3702	.3319	.2635
.300	.3275	.2547	.2126	.1529	.0597
.520	.0581	-.0858	-.0948	-.2099	-.3021
.685	-.5464	-.4860	-.9937	-.9537	-.9700
.775	-.2675	-.2562	-.3856	-.8902	-.9265
.900		-.2726	-.3097	-.4680	-.3325

[illegible] RIGHT VERTICAL (RB1R25) [illegible] 27 SEP 75)

REFERENCE DATA

SREF = [illegible] SQ FT. CREF = [illegible] INCHES
BREF = [illegible] INCHES MRP = [illegible]
SCALE = [illegible] SCALE

PARAMETRIC DATA

ALPHAC = -8.000 ELEVON = .000
RUDDER = .000 SPOBRK = .000

MACH [illegible] = .899 BETAO (1) = -5.950

SECTION (1)RIGHT VERTICAL DEPENDENT VARIABLE CP

Z/BV	.1580	.3160	.6000	.8400	.9250
X/CV					
.000	.1093	-.0047	.0148	.1320	.0370
.050	-.7470	-.9301	-1.1330	-.7445	-.5966
.150	-.9625	-.9470	-1.1210	-.7226	-.5892
.300	-.3412	-.9619	-1.0740	-.7110	-.5479
.520	-.5711	-.7831	-.9370	-.6503	-.5466
.685	-.4673	-.7535	-.8399	-.5634	-.4590
.775	-.3021	-.5524	-.7402	-.5251	-.4474
.900		-.3511	-.6183	-.4963	-.4345

MACH (1) = .898 BETAO (2) = 10.090

SECTION (1)RIGHT VERTICAL DEPENDENT VARIABLE CP

Z/BV	.1580	.3160	.6000	.8400	.9250
X/CV					
.000	.1561	-.0487	-.0296	-.1117	.0392
.050	.5807	.5434	.4815	.4519	.3977
.150	.4471	.4245	.3466	.3144	.2427
.300	.3105	.2377	.1952	.1384	.0390
.520	.0467	-.0986	-.1080	-.2218	-.3140
.685	-.3411	-.4613	-.9507	-.9585	-.9782
.775	-.2610	-.2473	-.3512	-.8181	-.9118
.900		-.2665	-.2914	-.4629	-.3087

ORIGINAL PAGE IS OF POOR QUALITY

ARC11-716 IA14 O1+T12+S12N25+AT10 RIGHT VERTICAL (RB1R26) (27 SEP 73)

REFERENCE DATA

SREF = 2.4210 SQ.FT. XMRP = 29.5800 INCHES
LREF = 38.7090 INCHES YMRP = .0000 INCHES
BREF = 38.7090 INCHES ZMRP = .0000 INCHES
SCALE = .0300 SCALE

PARAMETRIC DATA

ALPHAO = -6.000 ELEVON = .000
RUDDER = .000 SPOBRK = .000

MACH (1) = .897 BETAO (1) = -9.940

SECTION (1)RIGHT VERTICAL DEPENDENT VARIABLE CP

Z/BV	.1590	.3180	.6000	.8400	.9250
X/CV					
.000	.0988	-.0473	-.0354	.0729	-.0253
.050	-.7256	-.9707	-1.1190	-.7253	-.5900
.150	-.9643	-.9874	-1.0910	-.7010	-.5846
.300	-.3832	-.9732	-1.0520	-.6773	-.5500
.520	-.6096	-.7600	-.9301	-.6045	-.5380
.685	-.4537	-.6357	-.8163	-.5461	-.4672
.775	-.2785	-.5198	-.7201	-.5182	-.4443
.900		-.3246	-.6175	-.4917	-.4286

MACH (1) = .898 BETAO (2) = 10.070

SECTION (1)RIGHT VERTICAL DEPENDENT VARIABLE CP

Z/BV	.1580	.3160	.6000	.8400	.9250
X/CV					
.000	.1080	-.0732	-.0787	-.1685	-.0037
.050	.5557	.5209	.4540	.4351	.3672
.150	.4218	.4002	.3282	.2929	.2320
.300	.2927	.2210	.1785	.1217	.0188
.520	.0338	-.1062	-.1183	-.2215	-.3222
.685	-.3348	-.4435	-.7794	-.9198	-.9785
.775	-.2561	-.2396	-.3356	-.5963	-.8178
.900		-.2642	-.2827	-.4530	-.3294

AFC11-716 (A14 28+112 012+25+AT10 RIGHT VERTICAL (RB1R27) (27 SEP 75)

REFERENCE DATA

SREF = 2.4210 SQ.FT. XMRP = 25.5900 INCHES
LREF = 58.7090 INCHES YMRP = .0000 INCHES
BREF = 58.7090 INCHES ZMRP = .0000 INCHES
SCALE = .0300 SCALE

PARAMETRIC DATA

ALPHAO = -4.000 ELEVON = .000
RUDDER = .000 SPDBRK = .000

MACH (1) = .899 BETAO (1) = -0.99.

SECTION (1)RIGHT VERTICAL DEPENDENT VARIABLE CP

Z/CV	.1590	.3180	.6000	.8400	.9250
X/CV					
.000	.0804	-.0623	-.0707	.0191	-.0801
.050	-.7669	-.9740	-1.1440	-.7225	-.5928
.150	-1.0000	-.9862	-1.0980	-.6975	-.5854
.300	-.4004	-.9991	-1.0360	-.6810	-.5537
.520	-.6302	-.7730	-.9501	-.6191	-.5475
.685	-.4296	-.6794	-.8252	-.5513	-.4796
.775	-.2600	-.4893	-.7263	-.5137	-.4543
.900		-.2905	-.6082	-.4938	-.4358

ARC11-716 IA14 O1+T12+S12N25+AT10 RIGHT VERTICAL (RB1R28) (27 SEP 73)

REFERENCE DATA

SREF = 2.4210 SQ.FT. XMRP = 29.5800 INCHES
LREF = 38.7090 INCHES YMRP = .0000 INCHES
BREF = 38.7090 INCHES ZMRP = .0000 INCHES
SCALE = .0300 SCALE

PARAMETRIC DATA

ALPHAO = .000 ELEVON = .000
RUDDER = .000 SPOBRK = .000

MACH (1) = 1.246 BETAO (1) = -10.080

SECTION (1)RIGHT VERTICAL DEPENDENT VARIABLE CP

Z/BV	.1580	.3160	.6000	.8400	.9250
X/CV					
.000	.4029	.2608	.2510	.2691	.1878
.050	-.3988	-.4105	-.5837	-.6355	-.6890
.150	-.5417	-.4456	-.5912	-.6563	-.6986
.300	.0347	-.4817	-.5785	-.6255	-.5979
.520	-.2146	-.4491	-.5844	.5864	-.5028
.685	-.4120	-.5593	-.6309	-.5026	-.5157
.775	-.2761	-.5673	-.6254	-.4921	-.4735
.900		-.4651	-.5008	.4949	-.4618

MACH (1) = 1.245 BETAO (2) = -7.960

SECTION (1)RIGHT VERTICAL DEPENDENT VARIABLE CP

Z/BV	.1580	.3160	.6000	.8400	.9250
X/CV					
.000	.4613	.3540	.3612	.3758	.3017
.050	-.2984	-.3561	-.5424	-.6467	-.7258
.150	-.4222	-.3718	-.5434	-.6271	-.7009
.300	.0022	-.3693	-.4875	-.5268	-.5408
.520	-.1883	-.3297	-.4743	-.5028	-.4030
.685	-.4119	-.5628	-.6725	-.5820	-.6316
.775	-.3281	-.4880	-.6394	-.5366	-.5652
.900		-.4384	-.4476	-.4567	-.3757

MACH (1) = 1.248 BETAO (3) = -6.020

SECTION (1)RIGHT VERTICAL DEPENDENT VARIABLE CP

Z/BV	.1580	.3160	.6000	.8400	.9250
X/CV					
.000	.5215	.4369	.4578	.4636	.4084
.050	-.1923	-.2942	-.5259	-.6515	-.6977
.150	-.1923	-.2732	-.4167	-.6144	-.6240
.300	-.0052	-.2194	-.3359	-.4817	-.4926
.520	-.1439	-.1993	-.3103	-.3127	-.3211
.685	-.4185	-.5590	-.5944	-.5646	-.5846

[illegible] 716 1A14 OL+T12+S12+C5+A110 RIGHT VERTICAL (RB1R28)

MACH = 1.248 BETAO (3) = [illegible]

SECTION (1)RIGHT VERTICAL DEPENDENT VARIABLE CP

Z/BV	.1580	.3160	.6000	.8400	.9250
X/CV					
.775	-.3205	-.4474	-.5698	-.5874	-.5662
.900		-.3984	-.5353	-.5918	-.5758

MACH (1) = 1.247 BETAO (4) = [illegible]

SECTION (1)RIGHT VERTICAL DEPENDENT VARIABLE CP

Z/BV	.1580	.3160	.6000	.8400	.9250
X/CV					
.000	.5551	.4631	.5096	.5145	.4897
.050	-.1223	-.2931	-.5165	-.6073	-.6261
.150	-.0064	-.1624	-.3109	-.5203	-.5183
.300	-.0218	-.1126	-.1619	-.2411	-.3572
.520	-.1270	-.1505	-.1686	-.1532	-.0734
.685	-.4011	-.5704	-.5510	-.5144	-.5030
.775	-.3029	-.4247	-.5456	-.5336	-.5043
.900		-.3463	-.5175	-.5455	-.4979

MACH (1) = 1.246 BETAO (5) = -2.040

SECTION (1)RIGHT VERTICAL DEPENDENT VARIABLE CP

Z/BV	.1580	.3160	.6000	.8400	.9250
X/CV					
.000	.5959	.5392	.5466	.5359	.5376
.050	-.0152	-.1944	-.3598	-.4440	-.4491
.150	.1431	.0459	-.0766	-.1499	-.2516
.300	.0139	-.0689	-.0510	-.0213	-.0090
.520	-.0949	-.1028	-.1265	-.1039	-.0681
.685	-.3594	-.5609	-.5339	-.4874	-.5018
.775	-.2718	-.4244	-.5363	-.5066	-.5067
.900		-.3420	-.5003	-.5202	-.5114

ARC11-716 IA14 OL+T12+S12N25+AT10 RIGHT VERTICAL (RB1R28)

MACH (1) = 1.246 BETAO (6) = .010

SECTION (1)RIGHT VERTICAL DEPENDENT VARIABLE CP

Z/BV	.1580	.3160	.6000	.8400	.9250
X/CV					
.000	.5969	.5826	.5611	.5339	.5597
.050	.1590	-.0098	-.1111	-.1136	-.1050
.150	.1971	.1404	.0317	.0975	.1063
.300	.0622	.0074	.0407	.0803	.0583
.520	-.0284	-.0546	-.0671	-.0445	-.0443
.685	-.4011	-.5298	-.5196	-.4680	-.4931
.775	-.2653	-.4628	-.5115	-.4872	-.5110
.900		-.3279	-.4595	-.4958	-.4999

AFC11-710 1A14 OR+712+012NR5+A710 RIGHT VERTICAL (RB1R29) 27 SEP 73

REFERENCE DATA

SREF	2.4210	SQ.FT	XMRP =	29.5000	INCHES
CREF =	58.7090	INCHES	YMRP =	.0000	INCHES
BREF =	58.7090	INCHES	ZMRP =	.0000	INCHES
SCALE =	.0500	SCALE			

PARAMETRIC DATA

ALPHAO =	-10.000	ELEVON =	.000
RUDDER =	.000	SPOBR =	.000

MACH NO = 1.24 BETAO = 5 = .00

SECTION (1)RIGHT VERTICAL DEPENDENT VARIABLE CP

Z/BV	.1580	.3160	.6000	.6400	.9250
X/CV					
.000	.7298	.7200	.7545	.7572	.7729
.050	.5198	.1029	.0095	.0092	.0115
.150	.5251	.2587	.1711	.2287	.2285
.500	.1846	.1422	.1778	.1941	.1727
.725	.0560	.0796	.0584	.0474	.0440
.875	-.4055	-.4944	-.4830	-.4492	-.4498
.95	-.2931	-.4347	-.4644	-.4507	-.4524
.900		-.3680	-.4448	-.4699	-.4374

ORIGINAL PAGE IS OF POOR QUALITY

ARC11-716 IA14 O1+T12+S12N25+AT11 RIGHT VERTICAL (RB1R30) (02 OCT 73)

REFERENCE DATA

SREF = 2.4210 SQ.FT. XMRP = 29.5800 INCHES
LREF = 38.7090 INCHES YMRP = .0000 INCHES
BREF = 38.7090 INCHES ZMRP = .0000 INCHES
SCALE = .0300 SCALE

PARAMETRIC DATA

ALPHAO = .000 ELEVON = .000
RUDDER = .000 SPDBRK = .000

MACH (1) = .972 BETAO (1) = .040

SECTION (1)RIGHT VERTICAL DEPENDENT VARIABLE CP

Z/BV	.1580	.3160	.6000	.8400	.9250
X/CV					
.000	.4302	.3543	.4264	.3878	.4050
.050	.0585	-.2862	-.2563	-.1397	-.1976
.150	-.0614	-.1398	-.0902	-.1227	-.0873
.300	-.2031	-.1990	-.1387	-.1759	-.1959
.520	-.2332	-.2648	-.3133	-.3113	-.3531
.685	-.4544	-.7908	-.9838	-.9371	-.9511
.775	-.5466	-.4985	-.9476	-.9545	-.9251
.900		-.4322	-.5104	-.5331	-.4169

MACH (2) = 1.002 BETAO (1) = .040

SECTION (1)RIGHT VERTICAL DEPENDENT VARIABLE CP

Z/BV	.1580	.3160	.6000	.8400	.9250
X/CV					
.000	.4755	.4069	.4702	.4251	.4438
.050	.1162	-.2276	-.2132	-.0962	-.1426
.150	.0001	-.0831	-.0400	-.0741	-.0358
.300	-.1333	-.1345	-.0975	-.1328	-.1484
.520	-.1778	-.2072	-.2696	-.2561	-.2963
.685	-.4616	-.8221	-.9115	-.8705	-.8857
.775	-.3522	-.5231	-.8771	-.8783	-.8883
.900		-.4203	-.6095	-.8509	-.6374

MACH (3) = 1.025 BETAO (1) = .040

SECTION (1)RIGHT VERTICAL DEPENDENT VARIABLE CP

Z/BV	.1580	.3160	.6000	.8400	.9250
X/CV					
.000	.4949	.4315	.4880	.4579	.4802
.050	.1378	-.1952	-.1834	-.0691	-.1005
.150	.0311	-.0493	-.0052	-.0325	.0034
.300	-.1021	-.1067	-.0598	-.0871	-.1081
.520	-.1548	-.1772	-.2296	-.2126	-.2537
.685	-.4458	-.8008	-.8583	-.8187	-.8354

ARC11-716 TA14 O1+T12+S12N25+AT11 RIGHT VERTICAL (RB1R30)

MACH (1) = 1.025 PETAO (1) = .040

SECTION 1:RIGHT VERTICAL DEPENDENT VARIABLE CP

Z/BV	.1580	.3160	.6000	.8400	.9250
X/CV					
.775	-.3393	-.5124	-.8262	-.8235	-.8375
.900		-.4088	-.6884	-.8292	-.7989

PAGE IS OF POOR QUALITY

ARC11-716 IA14 O1+T12+S12N25+AT10 RIGHT VERTICAL (RB1R31) (06 FEB 74)

REFERENCE DATA

SREF = 2.4210 SQ.FT. XMRP = 29.5800 INCHES
LREF = 38.7090 INCHES YMRP = .0000 INCHES
BREF = 38.7090 INCHES ZMRP = .0000 INCHES
SCALE = .0300 SCALE

PARAMETRIC DATA

MACH = .900 ELEVON = .000
RUDDER = .000 SPDBRK = .000

ALPHAO(1) = -10.140 BETAO (1) = -8.370

SECTION (1)RIGHT VERTICAL DEPENDENT VARIABLE CP

Z/BV	.1580	.3160	.6000	.8400	.9250
X/CV					
.000	.2919	.1159	.1635	.2428	.1280
.050	-.6382	-.7969	.0000	-.9493	-.7369
.150	-.7600	-.8241	.0000	-.9000	-.7430
.300	-.2984	-.8078	-1.0120	-.8635	-.7083
.520	-.4853	-.6677	-.9258	-.7521	-.5891
.685	-.5267	-.7137	-.7483	-.6566	-.4640
.775	-.3327	-.6194	-.7134	-.6007	-.4387
.900		-.4515	-.6280	-.5248	-.4038

ALPHAO(1) = -10.130 BETAO (2) = -6.560

SECTION (1)RIGHT VERTICAL DEPENDENT VARIABLE CP

Z/BV	.1580	.3160	.6000	.8400	.9250
X/CV					
.000	.3764	.2375	.2784	.3432	.2413
.050	-.5324	-.7055	-1.0360	-.9208	-.6790
.150	-.4791	-.7242	-.9806	-.8828	-.6941
.300	-.3099	-.6674	-.8747	-.8036	-.6670
.520	-.4117	-.5394	-.8037	-.6663	-.5203
.685	-.4855	-.6126	-.6134	-.5785	-.3973
.775	-.3048	-.5349	-.5354	-.5258	-.3772
.900		-.3727	-.4373	-.4639	-.3543

ALPHAO(1) = -10.130 BETAO (3) = -4.840

SECTION (1)RIGHT VERTICAL DEPENDENT VARIABLE CP

Z/BV	.1580	.3160	.6000	.8400	.9250
X/CV					
.000	.4516	.3493	.3926	.4501	.3547
.050	-.4407	-.6204	-.8627	-.9488	.0000
.150	-.2250	-.5898	-.7761	-.8500	-.9611
.300	-.2800	-.4047	-.6320	-.7504	-.7564
.520	-.3547	-.4151	-.5352	-.5665	-.4522
.685	-.4523	-.6424	-1.0330	-.4223	-.3597

A0611-716 IA14 O1+T12+S12N25+AT10 RIGHT VERTICAL (RB1F31)

ALPHAO( ) = -10.130 BETAO (3) = -4.840

SECTION (1)RIGHT VERTICAL DEPENDENT VARIABLE CP

Z/BV	.1580	.3160	.6000	.8400	.9250
X/CV					
.775	-.2941	-.4991	-.5111	-.3569	.3238
.900		-.3759	-.3527	-.2989	-.2509

ALPHAO(1) = -10.080 BETAO (4) = -3.250

SECTION (1)RIGHT VERTICAL DEPENDENT VARIABLE CP

Z/BV	.1580	.3160	.6000	.8400	.9250
X/CV					
.000	.5025	.4299	.5063	.5217	.4422
.050	-.3420	-.5172	-.6227	-.8057	-.9299
.150	-.1027	-.2684	-.4355	-.5852	-.6897
.300	-.1935	-.1891	-.3384	-.4544	-.3696
.520	-.2561	-.3447	-.4133	-.4724	-.3537
.685	-.4048	-.6682	.0000	-.5817	-.5098
.775	-.2969	-.4762	-.5241	-.4082	-.2903
.900		-.3836	-.3572	-.3074	-.2084

ALPHAO(1) = -10.040 BETAO (5) = -1.600

SECTION (1)RIGHT VERTICAL DEPENDENT VARIABLE CP

Z/BV	.1580	.3160	.6000	.8400	.9250
X/CV					
.000	.5458	.5033	.5807	.5900	.5504
.050	-.1203	-.4245	-.5270	-.6447	-.6750
.150	-.0184	-.0718	-.1541	-.2188	-.2540
.300	-.0918	-.1144	-.1715	-.2125	-.2167
.520	-.2168	-.3049	-.3442	-.3577	-.3490
.685	-.4139	-.7362	-1.1400	-.7161	-.6525
.775	-.3025	-.4767	-.6142	-.4540	-.3347
.900		-.3739	-.4253	-.3310	-.2378

ARC11-718 IA14 O1+T12+S12N25+AT10 RIGHT VERTICAL (RB1R31)

ALPHAO(1) = -10.040 BETAO (6) = .100

SECTION (1)RIGHT VERTICAL DEPENDENT VARIABLE CP

X/CV \ Z/BV	.1580	.3160	.6000	.8400	.9250
.000	.5616	.5353	.6057	.5809	.5758
.050	.1475	-.0401	-.1540	-.0088	-.1985
.150	.0692	.0264	-.0248	-.0664	-.0857
.300	-.0119	-.0443	-.1005	-.1407	-.1609
.520	-.1721	-.2639	-.2920	-.3250	-.3449
.685	-.4056	-.7545	-1.1330	-.8867	-.7678
.775	-.3046	-.4789	-.7434	-.5780	-.4444
.900		-.3432	-.4660	-.3797	-.2556

ALPHAO(1) = -10.040 BETAO (7) = 1.810

SECTION (1)RIGHT VERTICAL DEPENDENT VARIABLE CP

X/CV \ Z/BV	.1580	.3160	.6000	.8400	.9250
.000	.5470	.5019	.5572	.5183	.5359
.050	.2474	.1309	.1084	.0945	.0845
.150	.1376	.1086	.0614	.0346	.0029
.300	.0473	.0127	-.0350	-.0726	-.1081
.520	-.1342	-.2297	-.2431	-.2867	-.3450
.685	-.4096	-.7645	-1.1300	-1.0750	-.8578
.775	-.3073	-.4622	-1.0550	-.7056	-.6370
.900		-.3383	-.4595	-.4234	-.3077

ALPHAO(1) = -10.130 BETAO (8) = 3.580

SECTION (1)RIGHT VERTICAL DEPENDENT VARIABLE CP

X/CV \ Z/BV	.1580	.3160	.6000	.8400	.9250
.000	.5178	.4285	.4661	.3967	.4449
.050	.3104	.2657	.2501	.2245	.1695
.150	.2151	.1953	.1503	.1169	.0625
.300	.1112	.0807	.0353	-.0141	-.0749
.520	-.0907	-.1873	-.2041	-.2656	-.3494
.685	-.3941	-.7245	-1.0960	-1.0450	-.9245
.775	-.2953	-.4382	-1.0080	-.7357	-.5827
.900		-.3135	-.4380	-.4248	-.2631

AR311-716 TA14 C4+F12+S12+25+AT10 RIGHT VERTICAL (RB1R31)

ALPHAO( ) = -10.130 BETAO (9) = 5.250

SECTION 1)RIGHT VERTICAL DEPENDENT VARIABLE CP

Z/BV	.1580	.3160	.6000	.8400	.9250
X/CV					
.000	.4626	.3421	.3547	.2747	.3487
.050	.3929	.3555	.3393	.3148	.2560
.150	.2808	.2586	.2134	.1863	.1151
.300	.1681	.1278	.0810	.0349	-.0426
.520	-.0568	-.1635	-.1590	-.2512	-.3526
.685	-.3029	-.6597	-1.0830	-.9961	-.8524
.775	-.2993	-.4034	-.8664	-.7669	-.5926
.900		-.2850	-.3688	-.5018	-.3032

ALPHAO(1) = -10.120 BETAO (10) = 7.010

SECTION (1)RIGHT VERTICAL DEPENDENT VARIABLE CP

Z/BV	.1580	.3160	.6000	.8400	.9250
X/CV					
.000	.3880	.2283	.2447	.1494	.2546
.050	.4754	.4391	.4215	.3914	.3274
.150	.3536	.3222	.2805	.2448	.1708
.300	.2300	.1794	.1357	.0804	.0019
.520	-.0123	-.1305	-.1322	-.2367	-.3514
.685	-.3706	-.5741	-1.0520	-.9777	-1.0060
.775	-.2797	-.3479	-.5916	-.9819	-.9889
.900		-.2627	-.3151	-.5602	-.4675

ALPHAO(1) = -10.130 BETAO (11) = 8.780

SECTION (1)RIGHT VERTICAL DEPENDENT VARIABLE CP

Z/BV	.1580	.3160	.6000	.8400	.9250
X/CV					
.000	.2947	.0983	.1267	.0454	.1655
.050	.5552	.5162	.4817	.4462	.3803
.150	.4209	.3829	.3330	.2945	.2144
.300	.2886	.2336	.1796	.1204	.0341
.520	.0302	-.0988	-.1065	-.2208	-.3452
.685	-.3582	-.5270	-1.0160	-.9726	-.9857
.775	-.3129	-.3171	-.4493	-.9275	-.9568
.900		-.2631	-.3145	-.5164	-.5166

ARC11-716 IA14 O1+T12+S12N25+AT10 RIGHT VERTICAL (RB1R31)

ALPHAO(2) = -8.110 BETAO (1) = -8.350

SECTION (1)RIGHT VERTICAL DEPENDENT VARIABLE CP

Z/BV	.1580	.3160	.6000	.8400	.9250
X/CV					
.000	.2727	.0943	.1246	.2181	.1156
.050	-.6686	-.8334	-1.1150	-.8517	-.7114
.150	-.7765	-.8655	-1.0700	-.8005	-.7194
.300	-.5274	-.8374	-1.0210	-.7715	-.6987
.52	-.5293	-.6600	-.8819	-.6789	-.5850
.685	-.4644	-.6680	-.7390	-.5724	-.4506
.775	-.3056	-.5675	-.7087	-.5205	-.4205
.900		-.3735	-.5602	-.4671	-.3921

ALPHAO(2) = -8.120 BETAO (2) = -6.640

SECTION (1)RIGHT VERTICAL DEPENDENT VARIABLE CP

Z/BV	.1580	.3160	.6000	.8400	.9250
X/CV					
.000	.3528	.2086	.2582	.3177	.2231
.050	-.5784	-.7437	-1.0620	-.8508	-.6973
.150	-.5109	-.7661	-1.0080	-.8276	-.7198
.300	-.3558	-.6988	-.9150	-.7536	-.6823
.520	-.4621	-.5302	-.8316	-.6258	-.5306
.685	-.4492	-.5945	-.8446	-.5356	-.4101
.775	-.3110	-.5091	-.5479	-.4803	-.3933
.900		-.3535	-.3992	-.4213	-.3553

ALPHAO(2) = -8.120 BETAO (3) = -4.940

SECTION (1)RIGHT VERTICAL DEPENDENT VARIABLE CP

Z/BV	.1580	.3160	.6000	.8400	.9250
X/CV					
.000	.4270	.3144	.3596	.4149	.3225
.050	-.4809	-.6234	-.9126	-.9221	-1.0530
.150	-.2642	-.6206	-.8305	-.8413	-1.0030
.300	-.3273	-.4506	-.6964	-.7560	-.8363
.520	-.4025	-.4523	-.5281	-.5479	-.5086
.685	-.4432	-.5645	-1.0260	-.4204	-.3903
.775	-.2680	-.5068	-.5273	-.3420	-.3390
.900		-.3463	-.3112	-.2815	-.2501

ARC11-716 (A14 O1+T12+S12N25+AT10 RIGHT VERTICAL (RB1R31)

ALPHAO(2) = -8.130 BETAO (4) = -3.270

SECTION 1)RIGHT VERTICAL DEPENDENT VARIABLE CP

X/CV \ Z/BV	.1580	.3160	.6000	.8400	.9250
.000	.4788	.4004	.4650	.5002	.4183
.050	-.3740	-.5546	-.6561	-.7660	-.9314
.150	-.1387	-.3386	-.4849	-.5838	-.7215
.300	-.2392	-.2179	-.3739	-.4621	-.4294
.520	-.2791	-.3567	-.4211	-.4547	-.3647
.685	-.4064	-.6334	-1.0540	-.4906	-.4296
.775	-.2907	-.4697	-.5181	-.3183	-.2747
.900		-.3524	-.3290	-.2593	-.1965

ALPHAO(2) = -8.130 BETAO (5) = -1.600

SECTION (1)RIGHT VERTICAL DEPENDENT VARIABLE CP

X/CV \ Z/BV	.1580	.3160	.6000	.8400	.9250
.000	.5138	.4705	.5438	.5541	.5159
.050	-.1423	-.4501	-.5542	-.6365	-.6826
.150	-.0556	-.0984	-.1622	-.2370	-.2643
.300	-.1313	-.1397	-.1849	-.2224	-.2232
.520	-.2334	-.3148	-.3510	-.3669	-.3399
.685	-.3886	-.6875	-1.1360	-.6249	-.5479
.775	-.2770	-.4273	-.5674	-.4260	-.2919
.900		-.3490	-.3940	-.2749	-.2018

ALPHAO(2) = -8.130 BETAO (6) = .010

SECTION (1)RIGHT VERTICAL DEPENDENT VARIABLE CP

X/CV \ Z/BV	.1580	.3160	.6000	.8400	.9250
.000	.5288	.4999	.5703	.5441	.5422
.050	.0984	-.0807	-.1807	-.0321	-.2218
.150	.0248	-.0035	-.0469	-.0851	-.1008
.300	-.0307	-.0686	-.1161	-.1568	-.1780
.520	-.1985	-.2783	-.3055	-.3399	-.3592
.685	-.3895	-.7090	-1.1440	-.6259	-.7030
.775	-.2847	-.4493	-.6598	-.5369	-.3595
.900		-.3424	-.4331	-.3496	-.2351

ARC11-716 IA14 OL+T12+S12N25+AT10 RIGHT VERTICAL (RB1R31)

ALPHAO(2) = -8.120 BETAO (7) = 1.700

SECTION (1)RIGHT VERTICAL DEPENDENT VARIABLE CP

Z/BV	.1580	.3160	.6000	.8400	.9250
X/CV					
.000	.5182	.4678	.5231	.4735	.4952
.050	.2081	.0951	.0831	.0763	.0547
.150	.1000	.0807	.0385	.0142	-.0184
.300	.0165	-.0098	-.0541	-.0914	-.1266
.520	-.1557	-.2437	-.2485	-.3005	-.3618
.685	-.4119	-.7255	-1.1330	-1.0660	-.7900
.775	-.2981	-.4559	-.9803	-.6896	-.5801
.900		-.3239	-.4505	-.3850	-.2800

ALPHAO(2) = -6.11 BETAO (8) = 3.340

SECTION (1)RIGHT VERTICAL DEPENDENT VARIABLE CP

Z/BV	.1580	.3160	.6000	.8400	.9250
X/CV					
.000	.4905	.4045	.4438	.3660	.4060
.050	.2850	.2131	.2169	.2002	.1450
.150	.1688	.1569	.1208	.0956	.0397
.300	.0808	.0490	.0092	-.0372	-.0953
.520	-.1137	-.1978	-.2239	-.2855	-.3565
.685	-.3522	-.6521	-1.1130	-1.0290	-.8916
.775	-.2706	-.3802	-.7583	-.6385	-.4496
.900		-.2790	-.3343	-.3359	-.2243

ALPHAO(2) = -8.090 BETAO (9) = 4.950

SECTION (1)RIGHT VERTICAL DEPENDENT VARIABLE CP

Z/BV	.1580	.3160	.6000	.8400	.9250
X/CV					
.000	.4468	.3286	.3301	.2469	.3158
.050	.3456	.3128	.3050	.2923	.2316
.150	.2377	.2190	.1870	.1637	.0943
.300	.1323	.1024	.0656	.0151	-.0595
.520	-.0758	-.1630	-.1682	-.2683	-.3609
.685	-.3537	-.5917	-1.0780	-.9942	-.8516
.775	-.2644	-.3575	-.6198	-.7167	-.5324
.900		-.2675	-.2848	-.4160	-.2816

ARC1:-718 IA14 C1+T12+S12N25+AT10 RIGHT VERTICAL (RB1R31)

ALPHAO(2) = 8.080 BETAO (10) = 8.750

SECTION (1)RIGHT VERTICAL DEPENDENT VARIABLE CP

X/CV \ Z/BV	.1580	.3160	.6000	.8400	.9250
.000	.3665	.2128	.2089	.1196	.2179
.050	.4404	.4084	.3878	.3657	.2994
.150	.3160	.2875	.2559	.2238	.1499
.300	.1992	.1548	.1165	.0681	-.0189
.520	-.0321	-.1421	-.1509	-.2469	-.3640
.685	-.3467	-.5405	-1.0510	-.9806	-1.0050
.775	-.2769	-.3333	-.4880	-.9732	-.9780
.900		-.2569	-.2692	-.4664	-.3351

ALPHAO(2) = -8.090 BETAO (11) = 8.570

SECTION (1)RIGHT VERTICAL DEPENDENT VARIABLE CP

X/CV \ Z/BV	.1580	.3160	.6000	.8400	.9250
.000	.2820	.0773	.0873	.0007	.1154
.050	.5245	.4880	.4508	.4168	.3585
.150	.3898	.3497	.3043	.2729	.1938
.300	.2630	.2099	.1581	.1002	.0145
.520	.0134	-.1141	-.1250	-.2353	-.3587
.685	-.3462	-.4717	-1.0190	-.9756	-.9952
.775	-.2855	-.2979	-.3957	-.9402	-.9700
.900		-.2553	-.2733	-.4811	-.3278

ALPHAO(3) = -6.100 BETAO (1) = -8.140

SECTION (1)RIGHT VERTICAL DEPENDENT VARIABLE CP

X/CV \ Z/BV	.1580	.3160	.6000	.8400	.9250
.000	.2639	.0777	.0996	.1717	.0738
.050	-.6016	-.8443	-1.1280	-.8521	-.6988
.150	-.7700	-.8857	-1.0850	-.8081	-.7076
.300	-.5633	-.8494	-1.0280	-.7818	-.6841
.520	-.5552	-.8416	-.8936	-.6787	-.5927
.685	-.4204	-.6476	-.7385	-.5636	-.4592
.775	-.3100	-.5103	-.6868	-.5077	-.4307
.900		-.3727	-.5222	-.4570	-.3992

ARC11-716 IA14 OL+T12+S12N25+AT10 RIGHT VERTICAL (RB1R31)

ALPHAO(3) = -6.110 BETAO (2) = -6.480

SECTION (1)RIGHT VERTICAL DEPENDENT VARIABLE CP

Z/BV	.1590	.3180	.6000	.8400	.9250
X/CV					
.000	.3346	.1920	.2115	.2730	.1785
.050	-.5804	-.7562	-1.0540	-.8715	-.6905
.150	-.5042	-.7918	-1.0060	-.8438	-.6977
.300	-.3801	-.6895	-.9099	-.7662	-.6660
.520	-.4749	-.5234	-.6213	-.6356	-.5250
.685	-.4225	-.5679	-.6251	-.5339	-.4046
.775	-.2919	-.4851	-.5164	-.4812	-.3760
.900		-.3395	-.3841	-.4181	-.3445

ALPHAO(3) = -6.130 BETAO (3) = -4.820

SECTION (1)RIGHT VERTICAL DEPENDENT VARIABLE CP

Z/BV	.1580	.3160	.6000	.8400	.9250
X/CV					
.000	.4047	.2908	.3162	.3768	.2798
.050	-.5069	-.6403	-.9356	-.8879	-.9326
.150	-.2721	-.6441	-.8598	-.8558	-.8677
.300	-.3606	-.[illegible]	-.7098	-.7674	-.6992
.520	-.4267	-.[illegible]	-.4994	-.5552	-.4845
.685	-.3890	-.52[illegible]	-1.0020	-.4203	-.3809
.775	-.2676	-.4708	-.4949	-.3576	-.3397
.900		-.3274	-.2541	-.2994	-.2738

ALPHAO(3) = -6.140 BETAO (4) = -3.220

SECTION (1)RIGHT VERTICAL DEPENDENT VARIABLE CP

Z/BV	.1580	.3160	.6000	.8400	.9250
X/CV					
.000	.4518	.3648	.4299	.4617	.3801
.050	-.3980	-.6213	-.6705	-.7550	-.9275
.150	-.1657	-.3017	-.5680	-.5951	-.7396
.300	-.2892	-.2798	-.3811	-.4788	-.4300
.520	-.2947	-.3616	-.4021	-.4632	-.3632
.685	-.3644	-.6322	-1.0510	-.4357	-.3986
.775	-.2982	-.4731	-.4942	-.3031	-.2594
.900		-.3408	-.3303	-.2479	-.1709

A[illegible] 718 .A14 3X+T12+312N25+AT1Q RIGHT VERTICAL (RB1R31)

[illegible] 5 = [illegible]6.030 BETA[illegible] 5 = [illegible]1.620

[illegible] SECT[illegible] RIGHT VERTICAL DEPENDENT VARIAB[illegible] CP

Z/BV .1580 .3160 .6000 .8400 .9250

X/CV

.000	.4765	.4219	.5042	.5[illegible]2	.4753
.0[illegible]5	-.1472	.4999	-.5571	-.65[illegible]	-.5[illegible]
.150	-.0994	-.1223	-.1543	-.2616	-.2[illegible]6
.500	-.1673	-.1707	-.1998	-.2598	-.2346
.520	.2537	-.3206	-.3660	-.3735	-.3713
.685	-.5[illegible]8	.6161	-1.1480	-.5936	-.5114
.775	-.2[illegible]72	-.4136	-.5441	-.4056	.2693
.900		-.3597	-.3688	-.2609	.1815

ALPHA(5) = -6.030 BETA(6) = .000

SECTION (1)RIGHT VERTICAL DEPENDENT VARIABLE CP

Z/BV .1580 .3160 .6000 .8400 .9250

X/CV

.000	.4883	.4501	.5324	.5096	.5026
.090	.0619	-.1323	-.1949	-.0514	-.2081
.150	-.0217	-.0286	-.0685	-.1037	-.1070
.500	-.0867	-.0942	-.1339	-.1717	-.1922
.520	-.2159	-.2885	-.3195	-.3450	-.3775
.685	-.5908	-.6593	-1.1420	-.8030	-.6707
.775	-.2966	-.4373	-.6468	-.5178	-.3490
.900		-.3442	-.4023	-.3470	-.2251

ALPHA(3) = -6.030 BETA(7) = 1.640

SECTION (1)RIGHT VERTICAL DEPENDENT VARIABLE CP

Z/BV .1580 .3160 .6000 .8400 .9250

X/CV

.000	.4900	.4168	.4838	.4368	.4571
.090	.1631	.0493	.0619	.0577	.0213
.150	.0516	.3552	.0195	-.0065	-.0251
.500	-.0248	-.0345	-.0706	-.1048	-.1412
.520	-.1733	-.2553	-.2529	-.3054	-.3716
.685	-.3995	-.7079	-1.1270	-1.0550	-.7934
.775	-.2965	-.4435	-.8641	-.6833	-.5634
.900		-.3283	-.4320	-.3801	-.2668

ARC11-716 IA14 O1+T12+S12N25+AT10 RIGHT VERTICAL (PB1R31)

ALPHAO(3) = -6.180 BETAO (8) = 3.330

SECTION (1)RIGHT VERTICAL DEPENDENT VARIABLE CP

Z/BV	.1580	.3160	.6000	.8400	.9250
X/CV					
.000	.4618	.3696	.4000	.3283	.3665
.050	.2210	.1816	.1966	.1820	.1196
.150	.1329	.1197	.1048	.0789	.0331
.300	.0470	.0241	-.0014	-.0485	-.1095
.520	-.1319	-.2053	-.2506	-.2921	-.3669
.685	-.3567	-.6315	-1.1050	-1.0040	-.7619
.775	-.2722	-.3759	-.7194	-.6303	-.4456
.900		-.2823	-.3168	-.3531	-.2238

ALPHAO(3) = -6.160 BETAO (9) = 5.010

SECTION (1)RIGHT VERTICAL DEPENDENT VARIABLE CP

Z/BV	.1580	.3160	.6000	.8400	.9250
X/CV					
.000	.4197	.2931	.2848	.1992	.2829
.050	.3167	.2869	.2848	.2708	.2081
.150	.2124	.1945	.1657	.1442	.0889
.300	.1098	.0790	.0446	-.0050	-.0771
.520	-.0909	-.1774	-.1912	-.2832	-.3763
.685	-.3458	-.5516	-1.0880	-.9868	-.7888
.775	-.2506	-.3437	-.5473	-.6775	-.5015
.900		-.2625	-.2409	-.3967	-.2944

ALPHAO(3) = -6.140 BETAO (10) = 6.740

SECTION (1)RIGHT VERTICAL DEPENDENT VARIABLE CP

Z/BV	.1580	.3160	.6000	.8400	.9250
X/CV					
.000	.3458	.1861	.1705	.0744	.1705
.050	.4104	.3825	.3598	.3444	.2760
.150	.2870	.2636	.2271	.2048	.1417
.300	.1772	.1398	.0969	.0495	-.0374
.520	-.0465	-.1980	-.1654	-.2527	-.3908
.685	-.3519	-.9082	-1.0500	-.9826	-1.0110
.775	-.2645	-.3335	-.4681	-.9777	-1.0070
.900		-.2670	-.2466	-.4080	-.3699

[illegible] TABULATED [illegible] DATA [illegible] - VER. 7

[illegible] 71 [illegible] 14 [illegible] [illegible]RATIO RIGHT VERTICAL [illegible]

[illegible] = [illegible] [illegible] [illegible]

[illegible] RIGHT VERTICAL DEPENDENT VARIABLE [illegible]

Z/B	.1580	.3160	.6000	[illegible]	[illegible]
X/C					
.000	.2679	[illegible]	[illegible]	[illegible]	[illegible]
.050	.4946	.4595	.4201	.5321	.5247
.150	.3144	.3326	.2551	.2506	.1806
.300	.2517	.1908	.1544	[illegible]	[illegible]
.520	[illegible]	-.1259	-.1313	-.2423	-.3726
.645	[illegible]	-.4677	-1.0080	[illegible]	[illegible]
.775	-.2569	-.2894	-.3718	[illegible]	.9654
.900		-.2556	.2751	.4795	-.3177

ALPHA([illegible]) = -4.170 BETA([illegible] 1) = 9.980

SECTION (1)RIGHT VERTICAL DEPENDENT VARIABLE CP

Z/B	.1580	.3160	.6000	.8400	.9250
X/C					
.000	.1739	-.0465	-.0753	.0223	-.0751
.050	.7646	-.9648	-1.1410	-.7291	-.5885
.150	-1.0070	-1.0190	-1.1440	-.7055	-.5873
.300	-.4016	-.9986	-1.0863	-.6827	-.5626
.520	-.6242	-.7966	-.9464	-.6194	-.5449
.645	-.4241	-.6897	-.8219	-.5531	-.4790
.775	-.2652	-.4818	-.7212	-.5214	-.4590
.900		-.2980	-.6155	-.4948	-.4368

ALPHA(2) = -4.190 BETA(2) = -7.970

SECTION (1)RIGHT VERTICAL DEPENDENT VARIABLE CP

Z/B	.1580	.3160	.6000	.8400	.9250
X/C					
.000	.2626	.0857	.0676	.1332	.0302
.050	-.6867	-.8527	-1.1510	-.8443	-.6855
.150	-.7709	-.8975	-1.0920	-.8113	-.6998
.300	-.5892	-.8489	-1.0350	-.7569	-.6666
.520	-.5779	-.6139	-.8957	-.6737	-.6000
.645	-.5089	-.6087	-.7337	-.5600	-.4574
.775	-.2947	.4962	-.6774	-.5044	-.4247
.900		-.3762	-.4066	-.4592	-.3856

ARC11-716 IA14 O1+T12+S12N25+AT10 RIGHT VERTICAL (RB1R31)

ALPHAO(4) = -4.210 BETAO (3) = -5.970

SECTION (1)RIGHT VERTICAL DEPENDENT VARIABLE CP

X/CV \ Z/BV	.1580	.3160	.6000	.8400	.9250
.000	.3303	.1869	.2024	.2576	.1892
.050	-.5692	-.7498	-1.0420	-.8579	-.6838
.150	-.4462	-.7821	-.9877	-.8118	-.6918
.300	-.4074	-.6305	-.8780	-.7274	-.5457
.520	-.4888	-.5029	-.7583	-.6045	-.5228
.685	-.3929	-.5464	-.5643	-.5050	-.4089
.775	-.[illegible]583	-.4476	-.4268	-.4566	-.3689
.900		-.3167	-.2814	-.3928	-.3218

ALPHAO(4) = -4.190 BETAO (4) = -3.980

SECTION (1)RIGHT VERTICAL DEPENDENT VARIABLE CP

X/CV \ Z/BV	.1580	.3160	.6000	.8400	.9250
.000	.4040	.2949	.3321	.3815	.3019
.050	-.4899	-.6963	-.8591	-.7573	-.9559
.150	-.2299	-.5225	-.7451	-.7385	-.7973
.300	-.3686	-.3822	-.5213	-.6676	-.7163
.520	-.4178	-.4000	-.4121	-.5730	-.4227
.685	-.3254	-.5282	-1.0170	-.3897	-.3112
.775	-.2633	-.4201	-.4982	-.3057	-.2722
.900		-.3147	-.2565	-.2277	-.1805

ALPHAO(4) = -4.180 BETAO (5) = -1.980

SECTION (1)RIGHT VERTICAL DEPENDENT VARIABLE CP

X/CV \ Z/BV	.1580	.3160	.6000	.8400	.9250
.000	.4509	.3656	.4556	.4709	.4224
.050	-.2568	-.5776	-.5853	-.6587	-.6963
.150	-.1516	-.2062	-.3042	-.4114	-.4317
.300	-.2598	-.2035	-.2305	-.2747	-.2457
.520	-.2808	-.3405	-.3812	-.3886	-.3713
.685	-.3551	-.5989	-1.1010	-.5546	-.4414
.775	-.2623	-.4050	-.5210	-.3615	-.2409
.900		-.3415	-.3360	-.2451	-.1618

ARC11-T16 (A14 C4+T12-S12N25+AT10 RIGHT VERTICAL (RB1R51)

ALPHAO(3) = -4.180 BETAO (6) = .050

SECTION (1)RIGHT VERTICAL DEPENDENT VARIABLE CP

X/CV \ Z/BV	.1580	.3160	.6000	.8400	.9250
.000	.4561	.3959	.4989	.4759	.4701
.050	.0337	-.1531	-.1978	-.0528	-.1909
.150	-.0612	-.0554	-.0817	-.1144	-.2247
.300	-.1215	-.1120	-.1423	-.1834	-.2021
.520	-.2305	-.2984	-.3304	-.3525	-.3881
.685	-.3792	-.6860	-1.1410	-.8094	-.6655
.775	-.2905	-.4188	-.5480	-.5354	-.3369
.900		-.3555	-.3892	-.3360	-.2295

ALPHAO(4) = -4.170 BETAO (7) = 2.020

SECTION (1)RIGHT VERTICAL DEPENDENT VARIABLE CP

X/CV \ Z/BV	.1580	.3160	.6000	.8400	.9250
.000	.4573	.3770	.4317	.3765	.4066
.050	.1453	.0512	.0610	.0757	.0305
.150	.0369	.0430	.0229	-.0004	-.1390
.300	-.0387	-.0449	-.0694	-.1065	-.1510
.520	-.1833	-.2622	-.2964	-.3350	-.3827
.685	-.3917	-.6771	-1.1210	-1.0510	-.7454
.775	-.2866	-.4041	-.7351	-.6798	-.5389
.900		-.3163	-.3803	-.4469	-.2905

ALPHAO(4) = -4.240 BETAO (8) = 4.040

SECTION (1)RIGHT VERTICAL DEPENDENT VARIABLE CP

X/CV \ Z/BV	.1580	.3160	.6000	.8400	.9250
.000	.4153	.3080	.3034	.2273	.2913
.050	.2229	.2045	.1974	.2091	.1541
.150	.1324	.1241	.1105	.0892	.0101
.300	.0449	.0231	.0028	-.0455	-.1130
.520	-.1400	-.2104	-.2218	-.3209	-.3965
.685	-.3795	-.6473	-1.1010	-1.0120	-.7622
.775	-.2665	-.3614	-.6016	-.7028	-.5337
.900		-.3000	-.3143	-.4053	-.2975

ARC11-716 IA14 O1+T12+S12N25+AT10 RIGHT VERTICAL (RB1R31)

ALPHAO(4) = -4.230 BETAO (9) = 6.050

SECTION (1)RIGHT VERTICAL DEPENDENT VARIABLE CP

Z/BV	.1580	.3160	.6000	.8400	.9250
X/CV					
.000	.3467	.1944	.1794	.0752	.1688
.050	.3473	.3243	.3059	.2957	.2415
.150	.2334	.2157	.1865	.1676	.0847
.300	.1303	.0945	.0635	.0177	-.0669
.520	-.0765	-.1769	-.1898	-.2853	-.3884
.685	-.3482	-.3141	-1.0630	-.9828	-1.0200
.775	-.2442	-.3103	-.4634	-.9887	-.8792
.900		-.2752	-.2579	-.4635	-.3525

ALPHAO(4) = -4.200 BETAO (10) = 8.070

SECTION (1)RIGHT VERTICAL DEPENDENT VARIABLE CP

Z/BV	.1580	.3160	.6000	.8400	.9250
X/CV					
.000	.2770	.0645	.0439	-.0722	.0473
.050	.4440	.4205	.3789	.3582	.2975
.150	.3184	.2929	.2463	.2214	.1363
.300	.2037	.1585	.1094	.0618	-.0350
.520	-.0266	-.1461	-.1616	-.2643	-.3890
.685	-.3517	-.4646	-.9732	-.9572	-1.0080
.775	-.2571	-.2796	-.4041	-.9016	-.9659
.900		-.2772	-.2548	-.4760	-.3342

ALPHAO(4) = -4.200 BETAO (11) = 10.080

SECTION (1)RIGHT VERTICAL DEPENDENT VARIABLE CP

Z/BV	.1580	.3160	.6000	.8400	.9250
X/CV					
.000	.1744	-.0879	-.1088	-.2219	-.0602
.050	.5349	.4979	.4422	.4103	.3539
.150	.4034	.3662	.3114	.2727	.1935
.300	.2762	.2219	.1655	.1056	.0083
.520	.0275	-.1078	-.1285	-.2374	-.3352
.685	-.3320	-.4302	-.6465	-.9200	-.9658
.775	-.2568	-.2430	-.3235	-.5334	-.6568
.900		-.2604	-.2909	-.4606	-.3488

ARC11-718 IA14 G1+T12+S12N25+AT10 RIGHT VERTICAL (RB1R31)

ALPHA(1) = -2.870 BETAO (1) = -9.990

SECTION (1)RIGHT VERTICAL DEPENDENT VARIABLE CP

X/CV \ Z/BV	.1580	.3160	.6000	.8400	.9250
.000	.1732	-.0653	-.1073	-.0243	-.1064
.050	-.7717	-.9857	-1.1480	-.7159	-.5865
.150	-1.0100	-1.0370	-1.1360	-.7117	-.5758
.300	-.4187	-1.0130	-1.0700	-.6780	-.5481
.520	-.6427	-.7781	-.9535	-.6160	-.5387
.685	-.4295	-.6638	-.8184	-.5567	-.4808
.775	-.2651	-.4646	-.6994	-.5270	-.4687
.900		-.2842	-.5997	-.4999	-.4375

ALPHAO(5) = -2.890 BETAO (2) = -7.990

SECTION (1)RIGHT VERTICAL DEPENDENT VARIABLE CP

X/CV \ Z/BV	.1580	.3160	.6000	.8400	.9250
.000	.2555	.0463	.0436	.1030	-.0008
.050	-.6854	-.8656	-1.1350	-.8389	-.6924
.150	-.7733	-.9117	-1.1040	-.8087	-.7004
.300	-.4050	-.8527	-1.0410	-.7643	-.6710
.520	-.5964	-.6064	-.8811	-.6596	-.5956
.685	-.4198	-.5951	-.7350	-.5640	-.4552
.775	-.2783	-.4798	-.6669	-.5019	-.4228
.900		-.3586	-.4680	-.4486	-.3920

ALPHAO(5) = -2.870 BETAO (3) = -5.970

SECTION (1)RIGHT VERTICAL DEPENDENT VARIABLE CP

X/CV \ Z/BV	.1580	.3160	.6000	.8400	.9250
.000	.3110	.1577	.1747	.2207	.1357
.050	-.5838	-.7667	-1.0510	-.8452	-.6779
.150	-.4680	-.8102	-1.0100	-.8089	-.6847
.300	-.4293	-.6315	-.8994	-.7325	-.6285
.520	-.5047	-.4945	-.7610	-.5913	-.5203
.685	-.3854	-.5285	-.5394	-.4997	-.4150
.775	-.2675	-.4213	-.4096	-.4555	-.3773
.900		-.3101	-.2473	-.4002	-.3281

ORIGINAL PAGE IS OF POOR QUALITY

ARC11-716 IA14 O1+T12+S12N25+AT10 RIGHT VERTICAL (RB1R31)

ALPHAO(5) = -2.860 BETAO (4) = -3.980

SECTION (1)RIGHT VERTICAL DEPENDENT VARIABLE CP

Z/BV	.1580	.3160	.6000	.8400	.9250
X/CV					
.000	.3889	.2687	.3103	.3606	.2722
.050	-.4915	-.7157	-.8656	-.7688	-.8692
.150	-.2495	-.4838	-.7512	-.7508	-.7840
.300	-.3877	-.3996	-.5206	-.7022	-.7061
.520	-.4405	-.3660	-.4035	-.6028	-.4864
.685	-.3467	-.5248	-.9894	-.4216	-.3251
.775	-.2723	-.4031	-.4955	-.3215	-.2566
.900		-.3078	-.2379	-.2524	-.2232

ALPHAO(5) = -2.840 BETAO (5) = -1.990

SECTION (1)RIGHT VERTICAL DEPENDENT VARIABLE CP

Z/BV	.1580	.3160	.6000	.8400	.9250
X/CV					
.000	.4246	.3403	.4290	.4431	.4006
.050	-.2541	-.5961	-.5759	-.6451	-.6834
.150	-.1791	-.2251	-.2982	-.4017	-.4595
.300	-.2874	-.2083	-.2341	-.2774	-.2490
.520	-.2844	-.3282	-.3803	-.3970	-.3824
.685	-.3448	-.5754	-.9778	-.5126	-.3685
.775	-.2608	-.3935	-.4753	-.3361	-.2262
.900		-.3100	-.3116	-.2408	-.1394

ALPHAO(5) = -2.840 BETAO (6) = .010

SECTION (1)RIGHT VERTICAL DEPENDENT VARIABLE CP

Z/BV	.1580	.3160	.6000	.8400	.9250
X/CV					
.000	.4437	.3735	.4727	.4501	.4473
.050	.0062	-.1933	-.1934	-.0575	-.1562
.150	-.1002	-.0698	-.0868	-.1188	-.1390
.300	-.1485	-.1307	-.1471	-.1902	-.2087
.520	-.2387	-.2977	-.3358	-.3644	-.3958
.685	-.3907	-.6468	-1.1420	-.8046	-.6101
.775	-.2730	-.4001	-.6097	-.5112	-.3196
.900		-.3567	-.3743	-.3251	-.2174

TABULATED PRESSURE DATA - [illegible]

[illegible] RIGHT VERTICAL (RB1R31)

ALPHAO(4) = -2.840 BETAO (7) = [illegible]

SECTION (1)RIGHT VERTICAL DEPENDENT VARIABLE CP

Z/BV	.1580	.3160	.6000	.8400	[illegible]
X/CV					
.000	.4505	.3491	.4061	.3495	[illegible]
.050	[illegible]	.0333	.0586	[illegible]	[illegible]
.150	[illegible]	.0295	.0142	[illegible]	[illegible]
.300	[illegible]	-.0573	-.0724	-.1049	[illegible]
.520	[illegible]	-.2579	[illegible]	-.3439	[illegible]
.695	[illegible]	-.6386	-1.1[illegible]	[illegible]	[illegible]
.775	[illegible]	-.3915	-.6551	[illegible]	[illegible]
.900		-.3104	-.3335	-.4365	-.2754

ALPHAO(5) = -2.860 BETAO (8) = 4.[illegible]

SECTION (1)RIGHT VERTICAL DEPENDENT VARIABLE CP

Z/BV	.1580	.3160	.6000	.8400	.9250
X/CV					
.000	.3959	.2777	.2694	.1927	.2589
.050	.2138	.1939	.2004	.2087	.1552
.150	.1230	.1176	.1058	.0929	.0297
.300	.0355	.0234	-.0026	-.0402	-.1133
.520	-.1396	-.2096	-.2260	-.3204	-.3967
.695	-.3401	-.5669	-1.0940	-.9963	-.8056
.775	-.2510	-.3298	-.4826	-.6848	-.5279
.900		-.2701	-.2233	-.3961	-.2885

ALPHAO(5) = -2.870 BETAO (9) = 6.060

SECTION (1)RIGHT VERTICAL DEPENDENT VARIABLE CP

Z/BV	.1580	.3160	.6000	.8400	.9250
X/CV					
.000	.3228	.1624	.1389	.0281	.1244
.050	.3332	.3151	.2961	.2892	.2384
.150	.2193	.2081	.1777	.1592	.0872
.300	.1193	.0918	.0550	.0104	-.0711
.520	-.0771	-.1800	-.1981	-.2911	-.3955
.695	-.3422	-.4881	-1.0190	-.9737	-1.0280
.775	-.2491	-.2978	-.4046	-.7436	-.7699
.900		-.2710	-.2136	-.4458	-.3196

ARC11-716 IA14 O1+T12+S12N25+AT10 RIGHT VERTICAL (PB1R31)

ALPHAO(5) = -2.870 BETAO (10) = 8.070

SECTION (1)RIGHT VERTICAL DEPENDENT VARIABLE CP

Z/BV	.1580	.3160	.6000	.8400	.9250
X/CV					
.000	.2623	.0551	.0145	-.1131	.0088
.050	.4239	.4098	.3641	.3463	.2901
.150	[illegible]	.2844	.2370	.2098	.1335
.300	.1943	.1517	.1019	.0525	-.0401
.520	-.0277	-.1450	-.1678	-.2704	-.3907
.685	-.3341	-.4432	-.7840	-.9574	-1.0010
.775	[illegible]	-.2722	-.3690	-.5978	-.7749
.900		-.2752	-.2328	-.4676	-.3222

ALPHAO(5) = -2.830 BETAO (11) = 10.090

SECTION (1)RIGHT VERTICAL DEPENDENT VARIABLE CP

Z/BV	.1580	.3160	.6000	.8400	.9250
X/CV					
.000	.1535	-.1117	-.1482	.2580	-.0977
.050	.5200	.4825	.4272	.3942	.3364
.150	.3319	.3[illegible]	.2463	.2591	.1809
.300	.2650	.2112	.1561	.0963	-.0048
.520	.0174	-.1150	-.1301	-.2441	-.3387
.685	-.3387	-.4175	-.5542	-.8875	-.9585
.775	-.2515	-.2[illegible]	-.3194	-.5174	-.5715
.900		-.2571	-.2649	-.4630	-.3677

ALPHAO(8) = -.690 BETAO (1) = -10.000

SECTION (1)RIGHT VERTICAL DEPENDENT VARIABLE CP

Z/BV	.1580	.3160	.6000	.8400	.9250
X/CV					
.000	.1436	[illegible]5	-.1835	-.1079	-.1841
.050	-.8071	[illegible]090	-1.0850	-.7061	-.5827
.150	-1.0450	-1.0540	-1.0520	-.6880	-.5628
.300	-.4471	-1.0490	-.9806	-.6681	-.5451
.520	-.6743	-.8196	-.8851	-.6038	-.5359
.685	-.4148	-.6273	-.7927	-.5506	-.4860
.775	-.2696	-.3922	-.7094	-.5283	-.4668
.900		-.2641	-.6283	-.5069	-.4369

AFC11-718 (A14 C4+T12+S12N25+AT10 RIGHT VERTICAL (RB1R31)

ALPHAO(5) = -.680 BETAO (2) = -7.980

SECTION (1)RIGHT VERTICAL DEPENDENT VARIABLE CP

Z/BV	.1580	.3160	.6000	.8400	.9250
X/CV					
.000	.2295	.0093	-.0298	.0181	-.0790
.050	-.7100	-.8982	-1.1580	-.8199	-.6881
.150	-.8242	-.9536	-1.1370	-.7971	-.5693
.300	-.4336	-.8905	-1.0910	-.7698	-.5172
.520	-.6327	-.6284	-.9046	-.6453	-.5743
.685	-.4755	-.5888	-.7429	-.5601	-.4692
.775	-.2584	-.4537	-.6507	-.5142	-.4406
.900		-.3104	-.4457	-.4650	-.4139

ALPHAO(6) = -.670 BETAO (3) = -5.980

SECTION (1)RIGHT VERTICAL DEPENDENT VARIABLE CP

Z/BV	.1580	.3160	.6000	.8400	.9250
X/CV					
.000	.2956	.1071	.1049	.1521	.0620
.050	-.6235	-.7986	-1.0910	-.8356	-.6732
.150	-.5352	-.8467	-1.0400	-.8045	-.6472
.300	-.4532	-.6839	-.9425	-.7065	-.5983
.520	-.5244	-.4883	-.7948	-.5712	-.5443
.685	-.3551	-.4961	-.4933	-.5056	-.4238
.775	-.2666	-.3796	-.3585	-.4561	-.3861
.900		-.3012	-.2174	-.3992	-.3239

ALPHAO(6) = -.660 BETAO (4) = -5.970

SECTION (1)RIGHT VERTICAL DEPENDENT VARIABLE CP

Z/BV	.1580	.3160	.6000	.8400	.9250
X/CV					
.000	.3638	.2215	.2477	.2959	.2137
.050	-.5216	-.7464	-.9083	-.8306	-.7213
.150	-.2926	-.5419	-.8197	-.8240	-.6598
.300	-.4197	-.4332	-.6318	-.7473	-.6003
.520	-.4610	-.4059	-.3897	-.5925	-.4667
.685	-.3329	-.4534	-.7562	-.4254	-.4147
.775	-.2407	-.3817	-.4320	-.3626	-.3904
.900		-.2909	-.1080	-.3123	-.3050

ORIGINAL PAGE IS OF POOR QUALITY

ARC11-718 IA14 O1+T12+S12N25+AT10 RIGHT VERTICAL (RB1R31)

ALPHAO(6) = -.680 BETAO (5) = -1.980

SECTION (1)RIGHT VERTICAL DEPENDENT VARIABLE CP

Z/BV	.1580	.3160	.6000	.8400	.9250
X/CV					
.000	.3889	.2904	.3753	.3988	.3490
.050	-.2704	-.6425	-.5833	-.6328	-.6861
.150	-.2228	-.3054	-.3672	-.4830	-.5346
.300	-.3730	-.2499	-.2428	-.3036	-.2640
.520	-.2796	-.3333	-.3850	-.4091	-.3826
.685	-.3029	-.5373	-.8473	-.4775	-.3150
.775	-.2611	-.3972	-.4746	-.2901	-.2102
.900		-.2875	-.2475	-.2068	-.1418

ALPHAO(6) = -.660 BETAO (6) = .010

SECTION (1)RIGHT VERTICAL DEPENDENT VARIABLE CP

Z/BV	.1580	.3160	.6000	.8400	.9250
X/CV					
.000	.4064	.3334	.4429	.4174	.4092
.050	-.0359	-.2676	-.2236	-.0778	-.1817
.150	-.1534	-.1354	-.1749	-.1337	-.1576
.300	-.1606	-.1476	-.1595	-.2016	-.2214
.520	-.2534	-.2977	-.3493	-.3729	-.4076
.685	-.3066	-.6023	-1.1420	-.7536	-.5143
.775	-.2704	-.3747	-.5595	-.4799	-.2973
.900		-.3271	-.3118	-.3036	-.1995

ALPHAO(6) = -.670 BETAO (7) = 2.050

SECTION (1)RIGHT VERTICAL DEPENDENT VARIABLE CP

Z/BV	.1580	.3160	.6000	.8400	.9250
X/CV					
.000	.4056	.3131	.3658	.3054	.3426
.050	.0756	.0005	.0620	.0609	.0224
.150	-.0186	-.0104	.0057	-.0148	-.0518
.300	-.0771	-.0723	-.0826	-.1207	-.1697
.520	-.2023	-.2662	-.2883	-.3529	-.4037
.685	-.3503	-.5960	-1.1320	-1.0130	-.7131
.775	-.2596	-.3541	-.5881	-.6129	-.4443
.900		-.3027	-.2670	-.3487	-.2343

A[illegible] RIGHT VERTICAL RB1531

ALPHA([illegible]) = -.680 BETA([illegible]) = 4.050

SECTION (1)RIGHT VERTICAL DEPENDENT VARIABLE CP

Z/BV	.1580	.3160	.6000	.8400	.9250
X/CV					
.000	.3756	.2468	.2239	.1450	[illegible]
.050	.1796	.1609	.1897	.2009	.1455
.150	.0889	.0878	.0915	[illegible]	[illegible]
.300	.0042	.0019	-.0140	-.0469	-.1362
.520	-.1[illegible]	-.2134	-.2310	-.3257	-.3[illegible]
.685	-.3[illegible]	.5335	-1.0660	-.9523	.6636
.775	[illegible]	-.2996	-.4365	-.5963	-.4564
.900		-.2792	-.2258	-.3556	-.2340

ALPHA(6) = -.690 BETA(9) = 6.060

SECTION (1)RIGHT VERTICAL DEPENDENT VARIABLE CP

Z/BV	.1580	.3160	.6000	.8400	.9250
X/CV					
.000	.3043	.1315	.0906	-.0237	.0738
.050	.3029	.2908	.2834	.2704	.2241
.150	.1960	.1837	.1631	.1429	.0743
.300	.0991	.0730	.0423	.0019	-.0899
.520	-.0877	-.1913	-.2057	-.2374	-.4004
.685	-.3432	-.4676	-.8254	-.9409	-1.0160
.775	-.2463	-.2749	-.3840	-.5780	-.6119
.900		-.2630	-.2020	-.4162	-.2793

ALPHA(6) = -.690 BETA(10) = 8.080

SECTION (1)RIGHT VERTICAL DEPENDENT VARIABLE CP

Z/BV	.1580	.3160	.6000	.8400	.9250
X/CV					
.000	.2358	.0062	-.0496	-.1815	-.0459
.050	.4062	.3887	.3493	.3264	.2747
.150	.2090	.2345	.2180	.1937	.1107
.300	.1757	.1332	.0914	.0403	-.0564
.520	-.0392	-.1578	-.1776	-.2768	-.3794
.685	-.3389	-.4508	-.6336	-.9109	-.9742
.775	-.2450	-.2653	-.3266	-.5329	-.5375
.900		-.2680	-.2205	-.4566	-.3194

ARC11-716 IA14 OI+T12+S12N25+AT10 RIGHT VERTICAL (RB1R31)

ALPHAO(6) = -.690 BETAO (11) = 10.120

SECTION (1)RIGHT VERTICAL DEPENDENT VARIABLE CP

Z/BV	.1580	.3160	.6000	.8400	.9250
X/CV					
.000	.1507	-.1257	-.1891	-.3092	-.1473
.050	.4965	.4625	.3977	.3744	.3208
.150	.3729	.3354	.2807	.2434	.1757
.300	.2532	.1972	.1407	.0842	-.0178
.520	.0120	-.1213	-.1482	-.2494	-.3432
.685	-.3359	-.4082	-.4762	-.7967	-.8918
.775	-.2629	-.2507	-.3048	-.4718	-.5282
.900		-.2[illegible]	-.2514	-.4575	-.3746

ALPHAO(7) = 2.010 BETAO (1) = -10.000

SECTION (1)RIGHT VERTICAL DEPENDENT VARIABLE CP

Z/BV	.1580	.3160	.6000	.8400	.9250
X/CV					
.000	.1250	-.1580	-.2536	-.1817	-.2627
.050	[illegible]	1.0240	[illegible]	-.6958	-.5671
.150	-1.0472	-1.0810	-1.[illegible]	-.6832	-.5531
.300	-.4757	1.[illegible]	[illegible]	-.6581	-.5332
.520	-.6458	-.7918	[illegible]	-.5968	-.5327
.685	-.3755	-.5461	-.7327	-.5457	-.4780
.775	.2655	-.3447	-.7004	-.5271	-.4581
.900		-.2456	-.6071	-.5082	-.4279

ALPHAO(7) = 1.960 BETAO (2) = -5.980

SECTION (1)RIGHT VERTICAL DEPENDENT VARIABLE CP

Z/BV	.1580	.3160	.6000	.8400	.9250
X/CV					
.000	.2648	.0715	.0302	.0710	-.0075
.050	-.6503	-.8297	-1.1020	-.7940	-.6529
.150	-.5907	-.8799	-1.0730	-.7616	-.6320
.300	-.4689	-.7051	-.9749	-.6900	-.5550
.520	-.4937	-.4745	-.7599	-.5677	-.4997
.685	-.3165	-.4304	-.4224	-.5103	-.4250
.775	-.2501	-.3499	-.2827	-.4689	-.3831
.900		-.3101	-.1423	-.4048	-.3403

[illegible] VARIATED [illegible] DATA [illegible] - [illegible]

[illegible] RIGHT VERTICAL (RB1R51)

[illegible] BETA [illegible]

[illegible] DEPENDENT [illegible]

Z/D	[illegible]	.3160	[illegible]	[illegible]	[illegible]
X/D					
[illegible]	.3245	.1891	.1775	.2841	[illegible]
[illegible]	-.5122	[illegible]	-.8607	[illegible]	[illegible]
[illegible]	[illegible]	-.5874	[illegible]	[illegible]	[illegible]
[illegible]	[illegible]	-.4775	[illegible]	[illegible]	[illegible]
[illegible]	[illegible]	-.5342	[illegible]	[illegible]	[illegible]
[illegible]	[illegible]	-.4345	[illegible]	[illegible]	[illegible]
[illegible]	[illegible]	-.3255	[illegible]	[illegible]	-.2114
[illegible]		-.2931	[illegible]	[illegible]	-.3309

ALPHAT [illegible] = 1.980 BETAT [illegible] = 1.990

[illegible] RIGHT VERTICAL DEPENDENT VARIABLE CP

Z/D	.1580	.3160	[illegible]	[illegible]	.9250
X/D					
[illegible]	[illegible]	[illegible]	[illegible]	[illegible]	[illegible]
[illegible]	-.2247	-.6697	-.5746	-.7154	-.6821
.150	.2603	-.3156	-.5616	-.4595	-.5132
.300	-.5994	-.2168	[illegible]	[illegible]	[illegible]
.520	-.5030	-.3752	-.4015	-.4150	-.3961
.675	-.2024	-.5115	-.7197	-.4647	-.2895
.775	-.2546	-.3772	[illegible]	[illegible]	-.1962
.900		-.2715	[illegible]	[illegible]	-.1270

ALPHAT [illegible] = 1.980 BETAT [illegible] = [illegible]

[illegible] RIGHT VERTICAL DEPENDENT VARIABLE CP

Z/D	.1580	.3160	.6000	.8400	.9250
X/D					
.000	.3840	.2066	.3981	.3749	.3671
[illegible]	-.0824	-.0814	-.2259	-.0891	-.1635
.150	-.1841	-.1290	-.1106	-.1440	-.1537
.300	-.2207	-.1612	-.1710	-.2148	-.2337
.520	-.2693	-.3001	-.3576	-.3898	-.4139
.675	-.3527	-.5850	-1.0840	-.6954	-.4356
.775	-.2558	-.3606	-.5080	-.4514	-.2965
.900		-.3257	-.2690	-.2985	-.1886

ARC11-716 IA14 O1+T12+S12N25+AT10, RIGHT VERTICAL (RB1R31)

ALPHAO(7) = 1.070 BETAO (6) = 2.040

SECTION (1)RIGHT VERTICAL DEPENDENT VARIABLE CP

Z/BV	.1580	.3160	.6000	.8400	.9250
X/CV					
.000	.3466	.2793	.3211	.2593	.2919
.050	.0127	-.0271	.0343	.0516	.0111
.150	-.0720	-.1036	-.0042	-.0270	-.0636
.300	-.1[illegible]	-.0959	-.0890	-.1310	-.1817
.520	-.2[illegible]	-.2[illegible]	-.2974	-.3655	-.4155
.685	-.32[illegible]	-.3[illegible]	-1.1240	-.955[illegible]	-.6302
.775	-.24[illegible]	-.3347	-.5018	-.5082	-.4001
.900		-.3[illegible]	-.2572	-.3274	-.2174

ALPHAO(7) = 2.050 BETAO (7) = 4.050

SECTION (1)RIGHT VERTICAL DEPENDENT VARIABLE CP

Z/BV	.15[illegible]	.3160	.6000	.8400	.9250
X/CV					
.000	.34[illegible]5	.2130	.1611	.1014	.1621
.050	.1422	.1365	.1658	.1[illegible]05	.1248
.150	.[illegible]637	.0[illegible]	.0358	.0684	.0054
.300	-.0[illegible]04	-.1135	-.[illegible]171	-.0626	-.1460
.520	.[illegible]	-.2[illegible]04	-.2542	-.3299	-.4000
.685	.3292	-.5221	-.7477	-.8409	-.6549
.775	-.2304	-.2816	-.4064	-.5425	-.4218
.900		-.2708	-.2131	-.2589	-.2011

ALPHAO(7) = 2.050 BETAO (8) = 6.070

SECTION (1)RIGHT VERTICAL DEPENDENT VARIABLE CP

Z/BV	.1580	.3160	.6000	.8400	.9250
X/CV					
.000	.2768	.0825	.0209	-.0937	.0120
.050	.2658	.2635	.2455	.2591	.2111
.150	.1696	.1687	.1410	.1320	.0676
.300	.0788	.0584	.0275	-.0136	-.1021
.520	-.0989	-.1958	-.2203	-.3132	-.4003
.685	-.3265	-.4910	-.6742	-.8726	-.9039
.775	-.2558	-.2577	-.3545	-.5083	-.4496
.900		-.2697	-.1819	-.3881	-.2758

TABULATED PRESSURE DATA

ALPHA = 2.140 BETA = 0.090

SECTION 1 RIGHT VERTICAL DEPENDENT VARIABLE CP

Z/BX	.1580	.3160	.6000	.8400	.9250
Y/BX					
.000	.2125	[illegible]	-.3118	-.3143	[illegible]
.050	.3755	.3667	.3116	[illegible]	[illegible]
.150	.2550	.2405	[illegible]	[illegible]	[illegible]
.300	.1637	.1168	.1765	[illegible]	.1733
.520	[illegible]	.1626	[illegible]	[illegible]	.3372
.685	[illegible]	.4231	.5534	[illegible]	[illegible]
.775	[illegible]	.2692	.3293	[illegible]	[illegible]
.900		.2655	[illegible]	.4411	.1612

ALPHA = 2.320 BETA = 1.0 [illegible]

SECTION 1 RIGHT VERTICAL DEPENDENT VARIABLE CP

Z/BX	.1580	.3160	.6000	.8400	.9250
Y/BX					
.000	.3196	-.3785	-.2673	.3532	-.2250
.050	.4785	.4414	.3787	[illegible]	.3159
.150	.5547	.3177	.2548	.0256	.1443
.300	.2562	.1842	.1247	.0535	-.0335
.520	.0947	.1046	.1562	-.2614	-.3426
.685	-.3244	.3965	-.4406	-.5433	-.6447
.775	-.2473	-.2744	-.2945	-.4216	-.4957
.900		-.2519	-.2297	-.4525	-.5681

ALPHA = 4.110 BETA = 1.0 = -10.000

SECTION 1 RIGHT VERTICAL DEPENDENT VARIABLE CP

Z/BX	.1580	.3160	.6000	.8400	.9250
Y/BX					
.000	-.0351	-.2132	-.3180	-.2436	-.3141
.050	-.8542	-1.0680	-1.0640	-.6573	-.5473
.150	-1.0770	-1.0850	-.9766	-.6669	-.5379
.300	-.5234	-1.0950	-.9145	-.6182	-.5060
.520	-.5078	-.7540	-.9048	-.5553	-.4892
.685	-.3263	-.5413	-.7855	-.5149	-.4529
.775	-.2552	-.5230	-.6920	-.4957	-.4450
.900		-.2905	-.6029	-.4760	-.4021

ARC11-716 IA14 O4+T12+S12N25+AT10 RIGHT VERTICAL (RB1R31)

ALPHAO(8) = 4.130 BETAO (2) = -7.960

SECTION (1)RIGHT VERTICAL DEPENDENT VARIABLE CP

Z/BV	.1580	.3160	.6000	.8400	.9250
X/CV					
.000	.0447	-.0837	-.1548	-.1253	-.2097
.050	-.7848	-.9794	-1.1090	-.7385	-.5949
.150	-.8772	-.9926	-1.0990	-.7323	-.5887
.300	-.5064	-.9260	-1.1060	-.6943	-.5445
.520	-.4682	-.5444	-.9615	-.5836	-.5213
.685	-.3192	-.4292	-.7286	-.5518	-.4418
.775	-.2529	-.3397	-.4897	-.5163	-.4211
.900		-.2667	-.1843	-.4907	-.3956

ALPHAO(8) = 4.150 BETAO (3) = -5.960

SECTION (1)RIGHT VERTICAL DEPENDENT VARIABLE CP

Z/BV	.1580	.3160	.6000	.9400	.9250
X/CV					
.000	.1301	.0482	-.0072	.0335	-.0278
.050	-.6710	-.8690	-1.0760	-.7174	-.5439
.150	-.6103	-.8738	-1.0460	-.6741	-.5519
.300	-.4941	-.7059	-.9735	-.6003	-.5311
.520	-.4001	-.4095	-.6277	-.5437	-.4807
.685	-.2873	-.3861	-.3505	-.4926	-.4091
.775	-.2374	-.3013	-.2001	-.4589	-.3721
.900		-.2937	-.1119	-.4062	-.3259

ALPHAO(8) = 4.160 BETAO (4) = -3.960

SECTION (1)RIGHT VERTICAL DEPENDENT VARIABLE CP

Z/BV	.1580	.3160	.6000	.8400	.9250
X/CV					
.000	.1984	.1686	.1471	.2107	.1091
.050	-.4587	-.8199	-.7949	-.7524	-.9993
.150	-.3507	-.5478	-.7867	-.7949	-.7173
.300	-.4672	-.5058	-.6277	-.7129	-.6602
.520	-.3819	-.2875	-.3839	-.5296	-.4454
.685	-.2682	-.4328	-.6696	-.3554	-.2695
.775	-.2253	-.3131	-.3468	-.2825	-.1864
.900		-.2740	-.1130	-.1738	-.1023

APS11-316 TA14 [illegible]+T12+S12N23+AT10 RIGHT VERTICAL (RB1R31)

ALPHA0(8) = 4.040 BETA0 (5) = -1.980

SECTION (1)RIGHT VERTICAL DEPENDENT VARIABLE CP

Z/BV	.1580	.3160	.6000	.8400	.9250
X/CV					
.000	.2358	.2379	.3108	.3269	.2713
.050	-.2329	.6711	-.5085	-.6069	-.6630
.150	-.2712	-.2985	-.3403	.4532	-.5056
.300	-.3886	-.2424	-.2555	-.3109	-.3832
.520	-.2915	-.3197	-.4026	-.4283	-.4054
.685	-.2722	-.4859	-.6763	-.4621	.2752
.775	-.2528	-.3545	-.4413	-.2658	-.1500
.900		-.2632	-.1819	-.1858	-.0961

ALPHA0(8) = 4.050 BETA0 (6) = .030

SECTION (1)RIGHT VERTICAL DEPENDENT VARIABLE CP

Z/BV	.1580	.3160	.6000	.8400	.9250
X/CV					
.000	.2881	.2457	.3689	.3437	.3382
.050	-.1371	-.2738	-.2122	-.1044	-.1766
.150	-.2057	-.1013	-.1137	-.1455	-.0851
.300	-.2012	-.1722	-.1751	-.2179	-.2446
.520	-.2649	-.2394	-.3632	-.3859	-.4167
.685	-.3103	-.5396	-.9184	-.5938	-.3826
.775	-.2529	-.3519	-.4761	-.4023	-.2733
.900		-.3041	-.2169	-.2646	-.1696

ALPHA0(8) = 4.050 BETA0 (7) = 2.050

SECTION (1)RIGHT VERTICAL DEPENDENT VARIABLE CP

Z/BV	.1580	.3160	.6000	.8400	.9250
X/CV					
.000	.2363	.2570	.2615	.2228	.2502
.050	-.0171	-.0158	-.0206	.0454	-.0140
.150	-.0768	-.0046	-.0132	-.0352	-.0291
.300	-.1220	-.1085	-.0995	-.1381	-.1984
.520	-.2316	-.2732	-.3083	-.3693	-.4259
.685	-.3129	-.5404	-1.0830	-.8804	-.5077
.775	-.2390	-.3247	-.4543	-.5365	-.3714
.900		-.3033	-.2241	-.2882	-.1716

PAGE QUALITY

ARC11-716 IA14 O1+T12+S12N25+AT10 RIGHT VERTICAL (RB1P31)

ALPHAO(8) = 4.030 BETAO (8) = 4.050

SECTION (1)RIGHT VERTICAL DEPENDENT VARIABLE CP

Z/BV	.1580	.3160	.6000	.8400	.9250
X/CV					
.000	.2321	.1828	.0828	.0656	.1121
.050	.1209	.1397	.1237	.1673	.1025
.150	.0444	.0884	.0790	.0572	.0368
.300	-.0174	-.0296	-.0325	-.0727	-.1615
.520	-.1530	-.2178	-.2451	-.3397	-.3981
.685	-.3135	-.5139	-.6677	-.7636	-.5769
.775	-.2189	-.2846	-.3778	-.4774	-.3838
.900		-.2710	-.1860	-.2478	-.1413

ALPHAO(8) = 4.020 BETAO (9) = 6.070

SECTION (1)RIGHT VERTICAL DEPENDENT VARIABLE CP

Z/BV	.1580	.3160	.6000	.8400	.9250
X/CV					
.000	.1496	.0602	-.0684	-.1426	-.0110
.050	.2478	.2622	.2063	.2509	.1953
.150	.1538	.1806	.1361	.1347	.1035
.300	.0680	.0404	.0272	-.0136	-.1097
.520	-.0967	-.1940	-.2082	-.3031	-.3996
.685	-.3250	-.4934	-.6194	-.7093	-.7722
.775	-.2347	-.2568	-.3069	-.4200	-.4147
.900		-.2780	-.1699	-.3655	-.2588

ALPHAO(8) = 4.010 BETAO (10) = 8.100

SECTION (1)RIGHT VERTICAL DEPENDENT VARIABLE CP

Z/BV	.1580	.3160	.6000	.8400	.9250
X/CV					
.000	.0809	-.0753	-.2127	-.3098	-.1600
.050	.3577	.3468	.2791	.2914	.2290
.150	.2444	.2555	.1889	.1696	.1284
.300	.1469	.0989	.0637	.0176	-.0834
.520	-.0562	-.1671	-.1824	-.2940	-.3698
.685	-.3408	-.4552	-.5147	-.5540	-.6395
.775	-.2362	-.2266	-.2900	-.3820	-.4194
.900		-.2757	-.1806	-.4162	-.2982

A0C11-716 TA14 Q8+Q12+Q12+Q5+AT10 RIGHT VERTICAL (RB1R31)

ALPHAO(5) = 4.000 BETAO (11) = 10.130

SECTION (1)RIGHT VERTICAL DEPENDENT VARIABLE CP

Z/BV	.1580	.3160	.6000	.8400	.9250
X/CV					
.000	-.0052	-.2262	-.3736	-.4473	-.2740
.050	.4596	.4313	.3426	.3336	.2661
.150	.3447	.3325	.2461	.2165	.1771
.300	.2294	.1693	.1198	.0633	-.0403
.520	-.0[illegible]	-.1301	-.1491	-.2540	-.3235
.685	-.3201	-.4099	-.3766	-.4034	-.6112
.775	-.2260	-.2120	-.2551	-.3943	-.4500
.900		-.2586	-.2182	-.4335	-.3496

ALPHAO(9) = 6.000 BETAO (1) = -9.980

SECTION (1)RIGHT VERTICAL DEPENDENT VARIABLE CP

Z/BV	.1580	.3160	.6000	.8400	.9250
X/CV					
.000	-.0561	-.2448	-.3859	-.3155	-.3776
.050	-.9506	-1.1040	-1.0600	-.6359	-.5131
.150	-.9944	-1.1200	-1.0210	-.6282	-.4951
.300	-.6043	-1.1310	-1.0130	-.5896	-.4862
.520	-.4033	-.4719	-1.0470	-.5726	-.4973
.685	-.2907	-.3165	-.8220	-.5519	-.4683
.775	-.2685	-.2919	-.6654	-.5531	-.4495
.900		-.2650	-.5534	-.5210	-.4258

ALPHAO(8) = 5.930 BETAO (2) = -7.960

SECTION (1)RIGHT VERTICAL DEPENDENT VARIABLE CP

Z/BV	.1580	.3160	.6000	.8400	.9250
X/CV					
.000	.0179	-.1312	-.2177	-.1718	-.2425
.050	-.8356	-1.0130	-1.0400	-.6606	-.5502
.150	-.7218	-1.0110	-1.0410	-.6530	-.5303
.300	-.5727	-.9159	-1.0830	-.6006	-.4885
.520	-.3935	-.3627	-1.0230	-.5266	-.4813
.685	-.2732	-.3185	-.7048	-.5219	-.4191
.775	-.2433	-.2861	-.3382	-.5131	-.4077
.900		-.2563	-.1190	-.4905	-.3941

ARC11-716 IA14 O1+T12+S12N25+AT10 RIGHT VERTICAL (RB1R31)

ALPHAO(9) = 5.960 BETAO (3) = -5.960

SECTION (1)RIGHT VERTICAL DEPENDENT VARIABLE CP

X/CV \ Z/BV	.1580	.3160	.6000	.8400	.9250
.000	.1063	.0089	-.0464	-.0209	-.0804
.050	-.6712	-.8903	-1.0040	-.7435	-.5699
.150	-.4836	-.8506	-1.0050	-.7113	-.5491
.300	-.5094	-.6450	-.9729	-.6413	-.5103
.520	-.3932	-.3566	-.6372	-.5492	-.4859
.685	-.2753	-.3586	-.3542	-.5042	-.4312
.775	-.2247	-.2936	-.1988	-.4795	-.3828
.900		-.2581	-.0970	-.4103	-.3255

ALPHAO(9) = 5.950 BETAO (4) = -3.970

SECTION (1)RIGHT VERTICAL DEPENDENT VARIABLE CP

X/CV \ Z/BV	.1580	.3160	.6000	.8400	.9250
.000	.1708	.1241	.1445	.1608	.0620
.050	-.4659	-.8161	-.6669	-.7625	-.9457
.150	-.3585	-.5498	-.6622	-.7965	-.7103
.300	-.4212	-.3755	-.6040	-.7244	-.7105
.520	-.3138	-.3375	-.4552	-.5469	-.4511
.685	-.2568	-.4238	-.5768	-.3685	-.2717
.775	-.2214	-.2964	-.3453	-.2700	-.1825
.900		-.2547	-.1508	-.1462	-.0924

ALPHAO(9) = 5.940 BETAO (5) = -1.960

SECTION (1)RIGHT VERTICAL DEPENDENT VARIABLE CP

X/CV \ Z/BV	.1580	.3160	.6000	.8400	.9250
.000	.2146	.2175	.2813	.2896	.2319
.050	-.2427	-.6585	-.4815	-.5913	-.6605
.150	-.2849	-.2817	-.3523	-.4430	-.5012
.300	-.3636	-.2487	-.2561	-.3108	-.2856
.520	-.2901	-.3262	-.4039	-.4267	-.4130
.685	-.2659	-.4668	-.7181	-.4457	-.2521
.775	-.2445	-.3413	-.4341	-.2696	-.1736
.900		-.2542	-.1530	-.1808	-.0855

ARC11-2[illegible] 1114 C1+T12+S12N25+AT10 RIGHT VERTICAL (R81R31)

ALPHA(4) = 5.940 BETA(6) = .040

SECTION (1)RIGHT VERTICAL DEPENDENT VARIABLE CP

Z/BV	.1580	.3150	.6000	.8400	.9250
X/CV					
.000	.2499	.2175	.3423	.3179	.3081
.050	-.1480	-.2058	-.2122	-.1183	-.1763
.150	-.2021	-.0950	-.1178	-.1445	-.0782
.300	-.2115	-.1794	-.1773	-.2275	-.2455
.520	-.2616	-.2973	-.3567	-.3989	-.4231
.685	-.2939	-.5226	-.8871	-.5765	-.7621
.775	-.2427	-.3366	-.4535	-.3886	-.2514
.900		-.2903	-.1901	-.0627	-.1499

ALPHA(5) = 5.880 BETA(7) = 2.060

SECTION (1)RIGHT VERTICAL DEPENDENT VARIABLE CP

Z/BV	.1580	.3150	.6000	.8400	.9250
X/CV					
.000	.2112	.2159	.2277	.1848	.2140
.050	-.0501	-.0166	-.0255	.0411	-.0219
.150	-.1094	.0040	-.0169	-.0393	-.0574
.300	-.1273	-.1161	-.1004	-.1410	-.2063
.520	-.2304	-.2673	-.3017	-.3725	-.4289
.685	-.3059	-.5176	-1.0170	-.9159	-.4925
.775	-.2336	-.3200	-.4168	-.4803	-.3471
.900		-.2976	-.2035	-.2384	-.1449

ALPHA(9) = 5.990 BETA(8) = 4.070

SECTION (1)RIGHT VERTICAL DEPENDENT VARIABLE CP

Z/BV	.1580	.3160	.6000	.8400	.9250
X/CV					
.000	.1753	.1403	.0445	.0149	.0575
.050	.0857	.1334	.1170	.1592	.0908
.150	.0191	.0849	.0720	.0442	.0365
.300	-.0333	-.0297	-.0308	-.0810	-.1728
.520	-.1579	-.2164	-.2500	-.3487	-.3953
.685	-.3178	-.5074	-.6421	-.7221	-.5272
.775	-.2164	-.2733	-.3863	-.4815	-.3658
.900		-.2700	-.1853	-.2332	-.1404

ARC11-718 IA14 OL+T12+S12N25+AT10 RIGHT VERTICAL (RB1R31)

ALPHAO(9) = 5.990 BETAO (9) = 6.100

SECTION (1)RIGHT VERTICAL DEPENDENT VARIABLE CP

Z/BV	.1580	.3160	.6000	.8400	.9250
X/CV					
.000	.1302	.0257	-.1153	-.1892	-.0599
.050	.2197	.2389	.1988	.2344	.1846
.150	.1313	.1669	.1288	.1262	.1077
.300	.0574	.0340	.0170	-.0177	-.1127
.520	-.0965	-.1846	-.2017	-.3163	-.3983
.685	-.3366	-.4749	-.5994	-.6172	-.6838
.775	-.2136	-.2623	-.3387	-.3807	-.3742
.900		-.2776	-.1714	-.3526	-.2361

ALPHAO(9) = 6.020 BETAO (10) = 8.130

SECTION (1)RIGHT VERTICAL DEPENDENT VARIABLE CP

Z/BV	.1580	.3160	.6000	.8400	.9250
X/CV					
.000	.0399	-.1114	-.2708	-.3661	-.1957
.050	.3249	.3308	.2661	.2750	.2226
.150	.2225	.2429	.1784	.1621	.1340
.300	.1359	.0856	.0632	.0096	-.0895
.520	-.0531	-.1637	-.1753	-.2971	-.3687
.685	-.3239	-.4522	-.4813	-.4731	-.6348
.775	-.2159	-.2352	-.2627	-.3514	-.3746
.900		-.2793	-.1945	-.3770	-.2750

ALPHAO(9) = 5.990 BETAO (11) = 10.150

SECTION (1)RIGHT VERTICAL DEPENDENT VARIABLE CP

Z/BV	.1580	.3160	.6000	.8400	.9250
X/CV					
.000	-.0343	-.2666	-.4341	-.4381	-.3086
.050	.4333	.4116	.3276	.3180	.2557
.150	.3228	.3160	.2303	.2018	.1732
.300	.2200	.1545	.1067	.0597	-.0412
.520	-.0086	-.1185	-.1548	-.2514	-.2734
.685	-.3357	-.4149	-.3752	-.4190	-.5072
.775	-.2045	-.2134	-.2451	-.3302	-.3942
.900		-.2494	-.2030	-.3792	-.3606

ARC11-716 IA14 O1+T12+S12N25+AT10 RIGHT VERTICAL (RB1R31)

ALPHA(10) = 5.050 BETA0 (1) = -9.975

SECTION (1)RIGHT VERTICAL DEPENDENT VARIABLE CP

Z/BV	.1580	.3160	.6000	.8400	.9250
X/CV					
.000	-.0629	-.2730	-.4268	-.3602	-.4030
.050	-.9375	1.1060	-1.0560	-.5840	-.4954
.150	-.6485	-1.1280	-1.0490	-.5826	-.4954
.300	-.6577	-1.0845	-1.0960	-.5858	-.4994
.520	[illegible]	-.3187	-1.1320	-.5757	-.5117
.685	-.2961	-.2984	-.7770	-.5642	-.4690
.775	-.2720	-.2998	-.4756	-.5716	-.4678
.900		-.2714	-.2956	-.5442	-.4596

ALPHA(10) = 8.000 BETA0 (2) = -7.950

SECTION (1)RIGHT VERTICAL DEPENDENT VARIABLE CP

Z/BV	.1580	.3160	.6000	.8400	.9250
X/CV					
.000	.0245	-.1545	-.2586	-.2366	-.2935
.050	-.7946	1.0290	-1.0270	-.6845	-.5356
.150	-.4355	-1.0030	-1.0090	-.6534	-.5183
.300	.5924	-.8037	-1.0850	-.6045	-.4862
.520	-.3904	-.3793	-1.0220	-.5449	-.4672
.685	-.2676	-.2819	-.4059	-.5283	-.4215
.775	-.2460	-.2760	-.2149	-.5116	-.4195
.900		-.2559	-.1158	-.4930	-.4047

ALPHA(10) = 7.980 BETA0 (3) = -5.950

SECTION (1)RIGHT VERTICAL DEPENDENT VARIABLE CP

Z/BV	.1580	.3160	.6000	.8400	.9250
X/CV					
.000	.1085	-.0186	-.0760	-.0531	-.1328
.050	-.6065	-.9149	-.8971	-.8083	-.6028
.150	-.4088	-.8047	-.8944	-.8112	-.5675
.300	-.5212	-.5778	-.9443	-.7465	-.5409
.520	-.3633	-.3055	-.5586	-.5867	-.4710
.685	-.2628	-.3386	-.3841	-.4990	-.4158
.775	-.2268	-.2859	-.2118	-.4514	-.3503
.900		-.2725	-.1047	-.3620	-.2893

ARC11-716 IA14 O4+T12+S12N25+AT10 RIGHT VERTICAL (PB1R31)

ALPHAO(10) = 7.940 BETAO (4) = -3.970

SECTION (1)RIGHT VERTICAL DEPENDENT VARIABLE CP

Z/BV	.1580	.3160	.6000	.8400	.9250
X/CV					
.000	.1536	.1013	.1231	.1238	.0414
.050	-.4035	-.7883	-.6679	-.7561	-.9005
.150	-.3362	-.4361	-.8495	-.7900	-.7159
.300	-.3908	-.3079	-.5647	-.7043	-.7315
.520	-.3168	-.3430	-.4618	-.5315	-.4561
.685	-.2670	-.4154	-.5329	-.3676	-.2652
.775	-.2313	-.2960	-.3402	-.2532	-.1679
.900		-.2644	-.1600	-.1254	-.0848

ALPHAO(10) = 7.940 BETAO (5) = -1.980

SECTION (1)RIGHT VERTICAL DEPENDENT VARIABLE CP

Z/BV	.1580	.3160	.6000	.8400	.9250
X/CV					
.000	.1885	.1848	.2042	.2665	.2117
.050	-.2335	-.4979	-.4813	-.5986	-.6466
.150	-.2370	.1996	.3231	-.4125	-.4594
.300	-.2559	-.2425	-.2579	-.2941	-.2415
.520	-.2780	-.3197	-.4051	-.4167	-.4011
.685	-.2551	-.4247	-.6166	-.4422	-.2554
.775	-.2295	-.3005	-.3807	-.2583	-.1540
.900		-.2480	-.1535	-.1517	-.0797

ALPHAO(10) = 7.890 BETAO (6) = .030

SECTION (1)RIGHT VERTICAL DEPENDENT VARIABLE CP

Z/BV	.1580	.3160	.6000	.8400	.9250
X/CV					
.000	.1945	.2297	.3387	.2934	.2856
.050	-.1523	-.1588	-.2048	-.1042	-.1671
.150	-.1565	-.0967	-.1162	-.1368	-.0680
.300	-.1792	-.1786	-.1700	-.2117	-.2382
.520	-.2538	-.3023	-.3466	-.3912	-.4106
.685	-.2528	-.4415	-.7527	-.5477	-.3433
.775	-.2086	-.2799	-.4265	-.3697	-.2345
.900		-.2605	-.1689	-.2272	-.1262

ATC11 718 TA14 C + 12+S12N25+A710 RIGHT VERTICAL (RB1R31)

ALPHA (1) = 7.940 BETAO (7) = 2.060

SECTION (1)RIGHT VERTICAL DEPENDENT VARIABLE CP

Z/BV	.158	.3160	.6000	.8400	.9250
X/CV					
.000	.1684	.1835	.1998	.1595	.1850
.050	-.0214	-.0217	-.0215	.0457	.0170
.150	.1206	-.0105	-.0145	-.0367	-.0290
.300	-.141	-.1113	-.0879	-.1367	.0259
.520	-.2740	-.2583	-.2974	-.3535	.4234
.685	-.3154	-.5085	-.3617	-.7673	.4740
.775	-.1324	-.3055	-.4107	-.4526	-.3157
.900		-.2868	-.1895	-.1540	-.1195

ALPHA (10) = 8.010 BETAO (6) = 4.090

SECTION (1)RIGHT VERTICAL DEPENDENT VARIABLE CP

Z/BV	.1580	.3160	.6000	.8400	.9250
X/CV					
.000	.1526	.0990	.0273	-.0380	.0146
.050	.0295	.1252	.1173	.1527	.0919
.150	-.0162	.0645	.0754	.0434	.0364
.300	-.0904	-.0327	-.0240	-.0149	-.1712
.520	-.1600	-.2493	-.2461	-.3533	-.3972
.685	-.3001	-.4826	-.5973	-.5675	-.4859
.775	-.2143	-.2609	-.3468	-.4241	-.2463
.900		-.2589	-.1819	-.1753	-.0950

ALPHA (10) = 8.000 BETA (9) = 6.120

SECTION (1)RIGHT VERTICAL DEPENDENT VARIABLE CP

Z/BV	.1580	.3160	.6000	.8400	.9250
X/CV					
.000	.1128	-.0150	-.1794	-.2263	-.1176
.050	.1582	.2252	.2093	.2251	.1629
.150	.0710	.1541	.1326	.1085	.0916
.300	.0097	.0233	.0200	-.0311	-.1268
.520	-.1153	-.1799	-.1959	-.3214	-.3887
.685	-.3157	-.4648	-.5159	-.4813	-.5756
.775	-.2036	-.2558	-.3066	-.3348	-.2852
.900		-.2862	-.1905	-.2792	-.1820

ORIGINAL PAGE IS OF POOR QUALITY

ARC11-718 IA14 O1+T12+S12N@5+AT10 RIGHT VERTICAL (RB1R31)

ALPHAO(10) = 7.980 BETAO (10) = 8.120

SECTION (1)RIGHT VERTICAL DEPENDENT VARIABLE CP

Z/BV	.1580	.3160	.6000	.8400	.9250
X/CV					
.000	.0238	-.1497	-.3537	-.4380	-.2496
.050	.2550	.3111	.2603	.2644	.2119
.150	.1690	.2259	.1770	.1583	[illegible]
.300	.0861	.0818	.0607	.0107	-.0828
.520	-.0772	-.1487	-.1804	-.2842	-.3491
.695	-.3148	-.4373	-.4230	-.4599	-.5544
.775	-.1975	-.2353	-.2550	-.3319	-.3156
.900		-.2649	-.2307	-.3437	-.2486

ALPHAO(10) = 7.950 BETAO (11) = 10.200

SECTION (1)RIGHT VERTICAL DEPENDENT VARIABLE CP

Z/BV	.1580	.3160	.6000	.8400	.9250
X/CV					
.000	[illegible]	-.3035	-.5016	-.5767	-.3578
.050	[illegible]	.3756	.3234	.2977	.2462
.150	.2315	.2917	.2244	.1968	.1669
.300	.1402	.1315	[illegible]	.0564	-.0454
.520	-.0413	-.1176	.1538	-.2583	-.2349
.695	-.3311	-.4248	-.3293	-.4348	-.4698
.775	-.2093	-.2217	-.2322	-.2767	-.3349
.900		-.2906	-.2327	-.3412	-.3215

ALPHA (11) = 9.990 BETAO (1) = -9.930

SECTION (1)RIGHT VERTICAL DEPENDENT VARIABLE CP

Z/BV	.1580	.3160	.6000	.8400	.9250
X/CV					
.000	-.0393	-.2979	-.4753	-.4394	-.4659
.050	-.7640	-1.1180	-1.0550	-.6393	-.5087
.150	-.5253	-1.1290	-1.0600	-.6243	-.4907
.300	-.6626	-.8452	-1.1270	-.6187	-.4836
.520	-.4283	-.3353	-1.1310	-.5905	-.5202
.695	-.3113	-.3193	-.5872	-.5655	-.4713
.775	-.2700	-.3161	-.3204	-.5747	-.4740
.900		-.2849	-.1945	-.5465	-.4755

AR211-716 IA14 CR+T12+S12R25+AT10 RIGHT VERTICAL (RB1R31)

ALPHAC (1) = 10.010 BETAO (2) = -7.910

SECTION 1 RIGHT VERTICAL DEPENDENT VARIABLE CP

Z/BV	.1580	.3160	.6000	.8400	.9250
Y/CV					
.000	.0296	-.1763	-.3197	-.2971	-.3576
.050	-.5843	-1.0510	-1.0020	-.7161	-.5405
.150	-.4625	-.9850	-1.0110	-.7312	-.5065
.300	-.5995	-.6757	-1.0770	-.6534	-.4775
.520	-.4[illegible]1	-.3155	-.9119	-.5791	-.4326
.685	-.[illegible]75	-.2953	-.3695	-.5221	-.4131
.775	-.2404	-.2862	-.2370	-.5246	-.3974
.900		-.2641	-.1293	-.4725	-.3929

ALPHAC (1) = 9.920 BETAO (2) = -5.920

SECTION 1 RIGHT VERTICAL DEPENDENT VARIABLE CP

Z/BV	.1580	.3160	.6000	.8400	.9250
Y/CV					
.000	.1132	-.0259	-.1148	-.0535	-.1795
.050	-.4873	-.9217	-.8513	-.8141	-.6420
.150	-.3927	-.7327	-.8662	-.8260	-.5738
.300	-.5228	-.5562	-.9094	-.7613	-.5350
.520	-.3717	-.3179	-.5616	-.5795	-.4651
.685	-.2811	-.3502	-.4349	-.4572	-.4199
.775	-.2275	-.2979	-.2125	-.4122	-.3585
.900		-.2771	-.1124	-.3169	-.2919

ALPHAC (1) = 9.940 BETAO (2) = -3.950

SECTION 1 RIGHT VERTICAL DEPENDENT VARIABLE CP

Z/BV	.1580	.3160	.6000	.8400	.9250
Y/CV					
.000	.1494	.0852	.0937	.0665	-.0180
.050	-.3454	-.7152	-.6427	-.7706	-.8397
.150	-.3173	-.3842	-.5906	-.8029	-.7158
.300	-.5636	-.5264	-.5472	-.7173	-.7315
.520	-.3171	-.3535	-.4693	-.4950	-.4597
.685	-.2682	-.4026	-.5894	-.3374	-.2580
.775	-.2376	-.3031	-.3167	-.2046	-.1589
.900		-.2664	-.1586	-.0944	-.0731

ORIGINAL PAGE IS OF POOR QUALITY

ARC11-716 IA14 OL+T12+S12N25+AT10 RIGHT VERTICAL (RB1R31)

ALPHAO(11) = 9.940 BETAO (5) = -1.960

SECTION (1)RIGHT VERTICAL DEPENDENT VARIABLE CP

Z/BV	.1580	.3160	.6000	.8400	.9250
X/CV					
.000	.1695	.1706	.2442	.2334	.1792
.050	-.2584	-.4185	-.4982	-.6020	-.6528
.150	-.2395	-.2030	-.3245	-.4587	-.4622
.300	-.2477	-.2564	-.2698	-.3029	-.2840
.520	-.2905	-.3206	-.4024	-.4245	-.4111
.685	-.2616	-.4198	-.6420	-.4581	-.2499
.775	-.2275	-.5112	-.3552	-.2600	-.1363
.900		-.2487	-.1622	-.1492	-.0371

ALPHAO(11) = 9.980 BETAO (6) = .040

SECTION (1)RIGHT VERTICAL DEPENDENT VARIABLE CP

Z/BV	.1580	.3160	.6000	.8400	.9250
X/CV					
.000	.1871	.1981	.3016	.2758	.2669
.050	-.1672	-.1719	-.2475	-.1141	-.1718
.150	-.1906	-.1075	-.1277	.1434	-.0638
.300	-.1988	-.1814	-.1765	-.2121	-.2465
.520	-.2484	-.2887	-.3472	-.3892	-.4217
.685	-.2832	-.4571	-.6760	-.5167	-.3378
.775	-.2190	-.2854	-.3827	-.3547	-.2075
.900		.2421	-.1581	-.2057	-.0911

ALPHAO(11) = 9.960 BETAO (7) = 2.070

SECTION (1)RIGHT VERTICAL DEPENDENT VARIABLE CP

Z/BV	.1580	.3160	.6000	.8400	.9250
X/CV					
.000	.1540	.1677	.1869	.1365	.1688
.050	-.1359	-.0406	-.0599	.0261	-.0296
.150	-.1494	-.0324	-.0303	-.0444	-.0291
.300	-.1563	-.1235	-.0996	-.1412	-.2085
.520	-.2308	-.2625	-.2949	-.3793	-.4166
.685	-.2777	-.4725	-.6927	-.6270	-.4541
.775	-.2099	-.2866	-.3769	-.4165	-.2377
.900		.2568	-.1681	-.1866	-.0554

ARC11-716 IA14 C1+C12+C12N25+ATIO RIGHT VERTICAL (RB1R31)

ALPHAC(11) = 9.990 BETAC (8) = -.112

SECTION (1)RIGHT VERTICAL DEPENDENT VARIABLE CP

Z/BV	.1580	.3160	.6000	.8400	.9250
X/CV					
.000	.1380	.0776	-.0106	-.0738	-.0149
.050	-.0622	.0710	.0877	.1416	.0749
.150	-.0882	.0432	.0624	.0403	.0335
.500	-.1095	-.0655	-.0411	-.0844	.1854
.520	-.1969	-.2126	-.2539	-.3497	-.3926
.645	-.3642	-.4811	-.6797	-.5338	-.4610
.775	-.2179	-.2708	-.3519	-.3429	-.2389
.900		-.2592	-.1947	-.1637	-.0642

ALPHAC(11) = 9.980 BETAC (9) = 6.130

SECTION (1)RIGHT VERTICAL DEPENDENT VARIABLE CP

Z/BV	.1580	.3160	.6000	.8400	.9250
X/CV					
.000	.0943	-.0268	-.2236	-.2632	-.1685
.050	.0513	.1946	.17[illegible]	.2065	.1516
.150	-.0114	.1345	.1[illegible]	.0962	.0941
.500	-.0466	-.0016	.0125	.0594	-.1239
.520	-.1487	-.1739	-.2035	-.3184	-.3743
.645	-.3118	-.4658	.6025	-.4299	-.5469
.775	.2075	-.2498	-.2513	-.3247	-.2220
.900		-.2644	-.1969	-.2906	-.1654

ALPHAC(11) = 10.030 BETAC (10) = 8.170

SECTION (1)RIGHT VERTICAL DEPENDENT VARIABLE CP

Z/BV	.1580	.3160	.6000	.8400	.9250
X/CV					
.000	.0227	-.1625	-.4082	-.4875	-.3048
.050	.1914	.2958	.2182	.2486	.2075
.150	.0752	.2082	.1596	.1414	.1523
.500	.0150	.0558	.0371	.0108	-.0786
.520	-.1174	.1444	.1781	-.2839	-.3147
.645	-.3116	-.4374	-.3795	-.4611	-.4838
.775	-.1982	-.2505	-.2348	-.3131	-.2652
.900		-.2644	-.2244	-.2800	-.2526

ARC11-716 IA14 O1+T12+S12N25+AT10 RIGHT VERTICAL (RB1R31)

ALPHAO(11) = 10.050 BETAO (11) = 10.230

SECTION (11)RIGHT VERTICAL DEPENDENT VARIABLE CP

Z/BV	.1580	.3160	.6000	.8400	.9250
X/CV					
.000	-.0248	-.3302	-.5961	-.6262	-.3980
.050	.1960	.3466	.2889	.2868	.2322
.150	.0984	.2629	.2137	.1901	.1871
.300	.0194	.1053	.0996	.0682	-.0330
.520	-.1062	-.1083	-.1497	-.2560	-.2193
.685	-.3067	-.4314	-.2972	-.4244	-.4409
.775	-.2056	-.2019	-.2237	-.2683	-.3010
.900		-.2566	-.2419	-.3144	-.2903

APC11-018 TA14 01+T12+S12N25+AT10 RIGHT VERTICAL (RB1R32) (17 APR 74)

REFERENCE DATA

SREF = 2.4210 SQ.FT. XMRP = 29.5800 INCHES
LREF = 38.7090 INCHES YMRP = .0000 INCHES
BREF = 38.7090 INCHES ZMRP = .0000 INCHES
SCALE = .0300 SCALE

PARAMETRIC DATA

MACH = 1.100 ELEVON = .000
RUDDER = .000 SPDBRK = .000

ALPHAO(1) = -10.240 BETAO (1) = -9.900

SECTION (1)RIGHT VERTICAL DEPENDENT VARIABLE CP

Z/BV	.1580	.3160	.6000	.8400	.9250
X/CV					
.000	.3876	.2791	.3348	.3899	.2839
.050	-.3806	-.5446	-.6767	-.8395	-.8926
.150	-.6055	-.5530	-.6533	-.8697	-.8902
.300	-.0384	-.5784	-.6691	-.7967	-.7057
.520	-.2277	-.4874	-.7021	-.6599	-.5448
.685	-.5066	-.7167	-.8326	-.5890	-.6445
.775	-.3605	-.6577	-.6772	-.5743	-.5267
.900		-.5415	-.6058	-.5530	-.5464

ALPHAO(1) = -10.220 BETAO (2) = -7.890

SECTION (1)RIGHT VERTICAL DEPENDENT VARIABLE CP

Z/BV	.1580	.3160	.6000	.8400	.9250
X/CV					
.000	.4571	.3886	.4480	.5063	.4096
.050	-.2953	-.4518	-.6639	-.8211	-.9619
.150	-.4012	-.4476	-.6393	-.7108	-.8603
.300	-.0227	-.4382	-.6007	-.6424	-.6702
.520	-.2001	-.3330	-.6067	-.6230	-.5051
.685	-.5073	-.7035	-.8459	-.6792	-.7847
.775	-.3454	-.5689	-.7940	-.6201	-.6993
.900		-.5175	-.5729	-.5351	-.5077

ALPHAO(1) = -10.220 BETAO (3) = -5.900

SECTION (1)RIGHT VERTICAL DEPENDENT VARIABLE CP

Z/BV	.1580	.3160	.6000	.8400	.9250
X/CV					
.000	.5457	.5025	.5563	.5995	.5155
.050	-.1891	-.3578	-.6254	-.8560	-.8948
.150	-.1275	-.3500	-.5393	-.7025	-.7740
.300	-.0507	-.2808	-.4426	-.5055	-.6292
.520	-.1552	-.1940	-.4109	-.4500	-.3742
.685	-.4866	-.7273	-.7294	-.8025	-.7837

ARC11-716 IA14 O1+T12+S12N25+AT10 RIC .T VERTICAL (RB1R32)

ALPHAO(1) = -10.220 BETAO (3) = -5.900

SECTION (1)RIGHT VERTICAL DEPENDENT VARIABLE CP

Z/BV	.1580	.3160	.6000	.8400	.9250
X/CV					
.775	-.3184	-.5488	-.7085	-.8108	-.8004
.900		-.4635	-.6787	-.6086	-.7485

ALPHAO(1) = -10.230 BETAO (4) = -3.930

SECTION (1)RIGHT VERTICAL DEPENDENT VARIABLE CP

Z/BV	.1580	.3160	.6000	.8400	.9250
X/CV					
.000	.6126	.5901	.6415	.6697	.6077
.050	-.0716	-.3052	-.5291	-.7814	-.8027
.150	.0760	-.1280	-.2766	-.6550	-.6383
.300	-.0098	-.0941	-.1672	-.1991	-.4281
.520	-.0896	-.1192	-.1988	-.1642	-.0965
.685	-.4636	-.7205	-.6798	.6672	-.6537
.775	-.3028	-.5745	-.6845	-.6695	-.6631
.900		-.4610	-.6625	-.6809	-.6265

ALPHAO(1) = -10.230 BETAO (5) = -1.940

SECTION (1)RIGHT VERTICAL DEPENDENT VARIABLE CP

Z/BV	.1580	.3160	.6000	.8400	.9250
X/CV					
.000	.6506	.6393	.6988	.7100	.6758
.050	.1162	-.2188	-.3866	-.4627	-.5216
.150	.1667	.0977	-.0200	-.1203	-.0741
.300	.0368	.0026	.0116	-.0103	.0080
.520	-.0240	-.0674	-.1218	-.0983	-.0949
.685	-.4449	-.7035	-.6740	-.6524	-.6480
.775	-.2951	-.5601	-.6677	-.6473	-.6542
.900		-.4107	-.6424	-.6581	-.6138

ARC11-716 (A14 O1+T12+S12N25+AT10 RIGHT VERTICAL (RB1R32)

ALPHAO(1) = -10.240 BETAO (6) = .030

SECTION (1)RIGHT VERTICAL DEPENDENT VARIABLE CP

Z/BV	.1580	.3160	.6000	.8400	.9250
X/CV					
.000	.6732	.6559	.7231	.7120	.7084
.050	.2912	.0120	.0136	-.0348	-.0824
.150	.2278	.1986	.1674	.1453	.2245
.300	.1163	.0978	.1193	.0822	.0736
.520	.0364	.0012	-.0558	-.0405	-.0709
.685	-.4537	-.6756	-.6938	-.6606	-.6515
.775	-.2963	-.5875	-.6579	-.6526	-.6468
.900		-.4198	-.6320	-.6622	-.6136

ALPHAO(1) = -10.250 BETAO (7) = 2.040

SECTION (1)RIGHT VERTICAL DEPENDENT VARIABLE CP

Z/BV	.1580	.3160	.6000	.8400	.9250
X/CV					
.000	.6556	.6470	.6653	.6375	.6633
.050	.3301	.2988	.2135	.3043	.2715
.150	.3063	.3150	.2667	.2532	.3025
.300	.2155	.1957	.1844	.1644	.1266
.520	.1083	.0359	.0108	-.0252	-.0649
.685	-.4903	-.6549	-.6653	-.6478	-.6399
.775	-.3025	-.5948	-.6286	-.6267	-.6339
.900		-.4123	-.5967	-.6416	-.6092

ALPHAO(1) = -10.260 BETAO (8) = 4.030

SECTION (1)RIGHT VERTICAL DEPENDENT VARIABLE CP

Z/BV	.1580	.3160	.6000	.8400	.9250
X/CV					
.000	.6169	.5952	.5849	.5511	.5923
.050	.4966	.4518	.3578	.4251	.3834
.150	.3937	.3861	.3485	.3409	.3461
.300	.3017	.2556	.2465	.2290	.1693
.520	.1539	.0831	.0456	.0073	-.0711
.685	-.4783	-.6293	-.6437	-.6345	-.6425
.775	-.2853	-.5643	-.5989	-.5983	-.6451
.900		-.3656	-.5239	-.5998	-.6433

ARC11-716 IA14 O1+T12+S12N25+AT10 RIGHT VERTICAL (RB1R32)

ALPHAO(1) = -10.250 BETAO (9) = 6.090

SECTION (1)RIGHT VERTICAL DEPENDENT VARIABLE CP

Z/BV	.1580	.3160	.6000	.8400	.9250
X/CV					
.000	.5525	.5014	.4839	.4404	.5078
.050	.5974	.5675	.4715	.5145	.4677
.150	.4908	.4751	.4231	.4065	.4036
.300	.3763	.3257	.3073	.2789	.2092
.520	.2006	.1165	.0906	.0241	-.0742
.685	-.4256	-.6017	-.6260	-.6412	-.6408
.775	-.2499	-.4711	-.5663	-.5877	-.6262
.900		-.3078	-.4843	-.5761	-.6275

ALPHAO(1) = -10.240 BETAO (10) = 8.120

SECTION (1)RIGHT VERTICAL DEPENDENT VARIABLE CP

Z/BV	.1580	.3160	.6000	.8400	.9250
X/CV					
.000	.4684	.3773	.3740	.3273	.4073
.050	.6872	.6619	.5637	.5839	.5354
.150	.5635	.5497	.4895	.4665	.4555
.300	.4516	.3955	.3641	.3264	.2493
.520	.2472	.1527	.1433	.0500	-.0629
.685	.4025	-.5434	-.5986	-.6198	-.6260
.775	-.2345	-.3791	-.5295	-.5495	-.5997
.900		-.2746	-.4273	-.5280	-.5870

ALPHAO(1) = -10.250 BETAO (11) = 10.110

SECTION (1)RIGHT VERTICAL DEPENDENT VARIABLE CP

Z/BV	.1580	.3160	.6000	.8400	.9250
X/CV					
.000	.3750	.2359	.2380	.1935	.3011
.050	.7696	.7345	.6288	.6404	.5853
.150	.6400	.6188	.5479	.5193	.4978
.300	.5175	.4553	.4159	.3711	.2836
.520	.2953	.1880	.1764	.0772	-.0462
.685	-.3763	-.4774	-.5665	-.5743	-.6022
.775	-.2098	-.2769	-.4795	-.5054	-.5638
.900		-.2499	-.3489	-.4703	-.5417

ARC11-716 IA14 OL+712+B12N25+AT10 RIGHT VERTICAL (RB1R32)

ALPHAO(2) = -8.190 BETAO (1) = -9.970

SECTION (1)RIGHT VERTICAL DEPENDENT VARIABLE CP

Z/BV	.1580	.3160	.6000	.8400	.9250
X/CV					
.000	.5498	.2879	.2919	.3486	.2444
.050	-.3972	-.1560	-.6948	-.8207	-.8954
.150	-.5154	-.3697	-.6769	-.8380	-.9006
.300	-.0614	-.5936	-.6900	-.7822	-.7091
.520	-.2656	-.4890	-.7230	-.6373	-.5626
.685	-.5041	-.6936	-.8244	-.5710	-.6160
.775	-.3337	-.6485	-.6787	-.5573	-.5325
.900		-.5380	-.5978	-.5440	-.5261

ALPHAO(2) = -8.200 BETAO (2) = -7.960

SECTION (1)RIGHT VERTICAL DEPENDENT VARIABLE CP

Z/BV	.1580	.3160	.6000	.8400	.9250
X/CV					
.000	.4337	.3715	.4145	.4589	.3669
.050	-.3069	-.4644	-.6743	-.8227	-.9607
.150	-.4157	-.4621	-.6426	-.7439	-.8493
.300	-.0520	-.4453	-.6126	-.6525	-.6659
.520	-.2262	-.3336	-.6098	-.6339	-.5153
.685	-.4938	-.6849	-.8443	-.6561	-.7637
.775	-.3394	-.5501	-.7780	-.6025	-.6116
.900		-.5171	-.5593	-.5315	-.4722

ALPHAO(2) = -8.210 BETAO (3) = -5.960

SECTION (1)RIGHT VERTICAL DEPENDENT VARIABLE CP

Z/BV	.1580	.3160	.6000	.8400	.9250
X/CV					
.000	.5238	.4799	.5220	.5579	.4732
.050	-.2067	-.3719	-.6302	-.8599	-.8975
.150	-.1432	-.3635	-.5306	-.7486	-.7816
.300	-.0752	-.2877	-.4355	-.5133	-.6349
.520	-.1844	-.2068	-.4058	-.4494	-.3879
.685	-.4753	-.7249	-.7243	-.7895	-.7772
.775	-.3260	-.5280	-.7138	-.7870	-.7914
.900		-.4665	-.6174	-.6046	-.7307

ARC11-716 IA14 C5+T12+S12N25+AT10 RIGHT VERTICAL (RB1R32)

ALPHAO(2) = -8.220 BETAO (4) = -1.980

SECTION (1)RIGHT VERTICAL DEPENDENT VARIABLE CP

Z/BV	.1580	.3160	.6000	.8400	.9250
X/CV					
.000	.6295	.6079	.6627	.6707	.6365
.050	.0953	-.2264	-.3909	-.4907	-.5034
.150	.1454	.0745	-.0482	-.1469	-.1498
.300	.0073	-.0241	-.0303	-.0316	-.0122
.520	-.0565	-.0907	-.1354	-.1225	-.0920
.685	-.4297	-.7000	-.6673	-.6414	-.6385
.775	-.2736	-.5245	-.6667	-.6458	-.6527
.900		-.4013	-.6442	-.6595	-.6190

ALPHAO(2) = -8.150 BETAO (5) = .010

SECTION (1)RIGHT VERTICAL DEPENDENT VARIABLE CP

Z/BV	.1580	.3160	.6000	.8400	.9250
X/CV					
.000	.6421	.6206	.6769	.6735	.6702
.050	.2702	-.0160	-.0163	.0330	-.0729
.150	.2546	.1758	.1459	.1300	.2008
.300	.0991	.0657	[illegible]	.0661	.0540
.520	.0793	-.0765	-.0719	-.0518	-.0649
.685	-.4267	-.6721	-.6925	-.6543	-.6520
.775	-.2795	-.5543	-.6558	-.6432	-.6505
.900		-.4060	-.6230	-.6607	-.6268

ALPHAO(2) = -8.190 BETAO (6) = 2.040

SECTION (1)RIGHT VERTICAL DEPENDENT VARIABLE CP

Z/BV	.1580	.3160	.6000	.8400	.9250
X/CV					
.000	.6279	.6135	.6296	.5982	.6203
.050	.3720	.2536	.1873	.2781	.2490
.150	.2696	.2816	.2427	.2331	.2850
.300	.1764	.1714	.1888	.1453	.1062
.520	.0854	.0220	-.0025	-.0402	-.0817
.685	-.4761	-.6543	-.6662	-.6483	-.6449
.775	-.2892	-.5863	-.6311	-.6292	-.6418
.900		-.4017	-.5934	-.6447	-.6287

ORIGINAL PAGE IS
OF POOR QUALITY

ARC11-716 IA14 O1+T12+S12N25+AT10 RIGHT VERTICAL (RB1R32)

ALPHAO(2) = -8.240 BETAO (7) = 4.040

SECTION (1)RIGHT VERTICAL DEPENDENT VARIABLE CP

Z/BV	.1580	.3160	.6000	.8400	.9250
X/CV					
.000	.5903	.5699	.5487	.5098	.4559
.050	.4609	.4147	.3228	.3947	.3554
.150	.3578	.3550	.3182	.3119	.3197
.300	.2657	.2294	.2193	.2031	.1419
.520	.1293	.0645	.0316	-.0156	-.0930
.685	-.4421	-.6368	-.6540	-.6441	-.6547
.775	-.2651	-.5465	-.6096	-.6144	-.6622
.900		-.3525	-.5409	-.6209	.6674

ALPHAO(2) = -8.220 BETAO (8) = 6.070

SECTION (1)RIGHT VERTICAL DEPENDENT VARIABLE CP

Z/BV	.1580	.3160	.6000	.8400	.9250
X/CV					
.000	.5301	.4849	.4545	.4077	.4680
.050	.5592	.5322	.4383	.4860	.4431
.150	.4461	.4417	.3942	.3835	.3812
.300	.3460	.3016	.2820	.2566	.1833
.520	.1779	.1020	.0796	.0107	-.0909
.685	-.4276	-.6050	-.6248	-.6373	-.6436
.775	-.2507	-.4628	-.5683	-.5927	-.6330
.900		-.3928	-.4872	-.5786	-.6369

ALPHAO(2) = -8.250 BETAO (9) = 8.080

SECTION (1)RIGHT VERTICAL DEPENDENT VARIABLE CP

Z/BV	.1580	.3160	.6000	.8400	.9250
X/CV					
.000	.4493	.3600	.3337	.2880	.3668
.050	.6611	.6317	.5329	.5593	.5111
.150	.5353	.5241	.4036	.4453	.4348
.300	.4248	.3754	.3423	.3090	.2305
.520	.2309	.1441	.1301	.0413	-.0761
.685	-.3942	-.5560	-.5994	-.6152	-.6315
.775	-.2351	-.3827	-.5282	-.5536	-.6078
.900		-.2744	-.4236	-.5285	-.5953

ARC11-?16 IA14 C1+T12+S12N25+AT10 RIGHT VERTICAL (RB1R32)

ALPHAO(2) = -8.240 BETAO (10) = 10.100

SECTION (1)RIGHT VERTICAL DEPENDENT VARIABLE CP

X/CV \ Z/BV	.1580	.3160	.6000	.8400	.9250
.000	.3856	.2244	.2014	.1548	.2617
.050	.7396	.7063	.5956	.6136	.5611
.150	.6139	.5938	.5229	.4950	.4768
.300	.4945	.4361	.3930	.3516	.2636
.520	.2792	.1718	.1595	.0640	-.0629
.685	-.3708	-.4921	-.5713	-.5803	-.6089
.775	-.2099	-.2771	-.4835	-.5171	-.5742
.900		-.2574	-.3567	-.4786	-.5522

ALPHAO(3) = -6.210 BETAO (1) = -10.020

SECTION (1)RIGHT VERTICAL DEPENDENT VARIABLE CP

X/CV \ Z/BV	.1580	.3160	.6000	.8400	.9250
.000	.3454	.2510	.2724	.3058	[illegible]
.050	-.4011	-.5550	-.6962	-.8232	-.8885
.150	-.5893	-.5646	-.6729	-.8323	-.8916
.300	-.0752	-.5990	-.7491	-.7861	-.7043
.520	-.2783	-.4855	-.7215	-.6383	-.5642
.685	-.4938	.6630	-.8038	-.5715	-.5962
.775	.2866	-.6309	-.6754	-.5625	-.5214
.900		.5233	-.6047	-.5579	-.4975

ALPHAO(3) = -6.220 BETAO (2) = -7.960

SECTION (1)RIGHT VERTICAL DEPENDENT VARIABLE CP

X/CV \ Z/BV	.1580	.3160	.6000	.8400	.9250
.000	.4235	.3569	.3880	.4222	.3212
.050	-.3140	-.4704	-.6838	-.8373	-.9519
.150	-.4074	-.4707	-.6462	-.7783	-.8423
.300	-.0722	-.4486	-.6114	-.6678	-.6686
.520	-.2514	-.3445	-.6111	-.6431	-.5165
.685	-.4862	-.6560	-.8431	-.6426	-.7574
.775	-.2386	-.5588	-.7599	-.5933	-.5792
.900		-.5133	-.5418	-.5357	-.4496

ARC11-716 IA14 O1+T12+S12N25+A710 RIGHT VERTICAL (RB1R32)

ORIGINAL PAGE IS OF POOR QUALITY

ALPHAO(3) = -6.230 BETAO (3) = -5.960

SECTION (1)RIGHT VERTICAL DEPENDENT VARIABLE CP

Z/BV	.1580	.3160	.6000	.8400	.9250
X/CV					
.000	.5004	.4530	.4928	.5161	.4346
.050	-.2209	-.3897	-.6787	-.8700	-.9118
.150	-.1580	-.3788	-.4960	-.8087	-.7935
.300	-.1005	-.2864	-.4079	-.6048	-.6471
.520	-.2141	-.2347	-.3926	-.4123	-.4482
.685	-.4688	-.7177	-.7162	-.7542	-.7706
.775	-.3143	-.5118	-.7268	-.7634	-.7714
.900		-.4752	-.5264	-.6881	-.7158

ALPHAO(3) = -6.120 BETAO (4) = -5.980

SECTION (1)RIGHT VERTICAL DEPENDENT VARIABLE CP

Z/BV	.1580	.3160	.6000	.8400	.9250
X/CV					
.000	.6005	.5672	.6180	.6238	.5920
.050	.0722	-.2496	-.3933	-.5008	-.5117
.150	.1148	.0416	-.0969	-.1971	-.1902
.300	-.0275	-.0649	-.0430	.0558	-.0364
.520	-.0965	-.1126	-.1615	-.1494	-.1154
.685	-.4181	-.7080	-.6786	-.6642	-.6505
.775	-.2729	-.4986	-.6827	-.6735	-.6667
.900		-.3948	-.6735	-.6894	-.6372

ALPHAO(3) = -6.130 BETAO (5) = .000

SECTION (1)RIGHT VERTICAL DEPENDENT VARIABLE CP

Z/BV	.1580	.3160	.6000	.8400	.9250
X/CV					
.000	.6169	.5855	.6289	.6248	.6297
.050	.2430	-.0476	-.0597	-.0592	-.0712
.150	.1728	.1480	.0876	.1025	.1807
.300	.0473	.0175	.0758	.0436	.0292
.520	-.0281	-.0521	-.0964	-.0730	-.0908
.685	-.4149	-.6805	-.6990	-.6633	-.6636
.775	-.2782	-.5203	-.6675	-.6603	-.6649
.900		-.3931	-.6392	-.6735	-.6485

ARC11-716 IA14 OL+T12+S12N25+AT10 RIGHT VERTICAL (RB1R32)

ALPHAO(3) = -8.120 BETAO (6) = 2.030

SECTION (1)RIGHT VERTICAL DEPENDENT VARIABLE CP

Z/BV	.1580	.3160	.6000	.8400	.9250
X/CV					
.000	.5936	.5734	.5885	.5508	.5760
.050	.3377	.1957	.1266	.2464	.2202
.150	.2322	.2366	.2056	.1972	.2543
.300	.1257	.1317	.1323	.1195	.0757
.520	.0532	-.0047	-.0298	-.0635	-.1078
.685	-.4645	-.6662	-.6851	-.6603	-.6629
.775	-.2865	-.5710	-.6481	-.6455	-.6634
.900		-.3956	-.5984	-.6585	-.6640

ALPHAO(3) = -6.110 BETAO (7) = 4.060

SECTION (1)RIGHT VERTICAL DEPENDENT VARIABLE CP

Z/BV	.1580	.3160	.6000	.8400	.9250
X/CV					
.000	.5526	.5353	.5061	.4652	.5094
.050	.4158	.3688	.2833	.3610	.3258
.150	.3112	.3139	.2866	.2826	.3001
.300	.2039	.1966	.1849	.1776	.1158
.520	.0936	.0433	.0148	-.0363	-.1151
.685	-.4341	-.6421	-.6607	-.6495	-.6631
.775	-.2658	-.5378	-.6188	-.6261	-.6734
.900		-.3552	-.5469	-.6320	-.6897

ALPHAO(3) = 6.190 BETAO (8) = 6.080

SECTION (1)RIGHT VERTICAL DEPENDENT VARIABLE CP

Z/BV	.1580	.3160	.6000	.8400	.9250
X/CV					
.000	.4941	.4523	.4089	.3677	.4250
.050	.3221	.4878	.3985	.4575	.4161
.150	.4013	.4023	.3626	.3572	.3623
.300	.3060	.2710	.2476	.2396	.1647
.520	.1495	.0801	.0647	-.0065	-.1116
.685	-.4130	-.6187	-.6331	.6401	-.6513
.775	-.2422	.4747	-.5767	-.3999	-.6428
.900		-.3059	-.4848	-.5849	-.6443

ARC11-716 IA14 OL+T12+S12+R25+AT10 RIGHT VERTICAL (RB1R32)

ALPHA0(3) = -8.190 BETA0 (8) = 9.090

SECTION (1)RIGHT VERTICAL DEPENDENT VARIABLE CP

Z/BV	.1580	.3160	.6000	.8400	.9250
X/CV					
.000	.4288	.3900	.3032	.2521	.3250
.050	.6125	.5905	.4915	.5273	.4807
.150	.4908	.4885	.4299	.4164	.4126
.300	.3457	.3453	.3144	.2854	.2154
.520	.2048	.1242	.1063	.0226	[illegible]
.685	-.5489	-.5697	-.6070	-.6155	-.6358
.775	-.2222	-.3807	-.5346	-.5633	.6142
.900		-.2791	-.4367	.5534	-.6034

ALPHA0(5) = -8.170 BETA0 (10) = 10.090

SECTION (1)RIGHT VERTICAL DEPENDENT VARIABLE CP

Z/BV	.1580	.3160	.6000	.8400	.9250
X/CV					
.000	.3501	.2160	.1728	.1157	.2187
.050	.7043	.6717	.5758	.5793	.5319
.150	.5766	.5612	.4915	.4655	.4551
.300	.3624	.4[illegible]	.3655	.3467	.2380
.520	.2571	.1554	.1365	.0457	.0945
.685	-.3524	-.5101	-.5748	-.5843	-.6199
.775	-.2[illegible]	-.2881	-.4918	.5298	.5074
.900		.2612	-.3641	.4868	.5[illegible]

ALPHA0(4) = 4.240 BETA0 (1) = 10.010

SECTION (1)RIGHT VERTICAL DEPENDENT VARIABLE CP

Z/BV	.1580	.3160	.6000	.8400	.9250
X/CV					
.000	.3135	.2314	.2425	.2650	.1631
.050	-.4185	-.5675	-.7207	-.8399	-.9108
.150	-.5928	-.5795	-.7119	-.8470	-.9093
.300	-.1184	-.5902	-.7251	-.7968	-.7244
.520	-.5195	-.4917	-.7459	-.6484	.5867
.685	-.5002	-.6439	-.8202	-.5789	-.5849
.775	-.2452	-.6243	-.6980	-.5704	-.5248
.900		-.5381	-.6112	-.5773	-.4997

ARC11-716 IA14 O6+T12+S12N25+AT10 RIGHT VERTICAL (RB1R32)

ALPHAO(4) = -4.270 BETAO (2) = -8.020

SECTION (1)RIGHT VERTICAL DEPENDENT VARIABLE CP

Z/BV	.1560	.3160	.6000	.8400	.9250
X/CV					
.000	.3905	.3246	.3545	.3782	.2752
.050	-.5278	-.4896	-.6983	-.8488	-.9691
.150	.4367	-.4909	-.6591	-.8042	-.8594
.300	-.1074	-.4667	-.6271	-.6810	-.6904
.520	-.2887	-.3602	-.6218	-.6554	-.5284
.685	-.4864	-.6245	-.8513	-.6336	-.7403
.775	-.2478	-.5551	-.7301	-.5810	-.5427
.900		.5211	-.5378	-.5366	-.4370

ALPHAO(4) = 4.250 BETAO (3) = -5.970

SECTION (1)RIGHT VERTICAL DEPENDENT VARIABLE CP

Z/BV	.1560	.3160	.6000	.8400	.9250
X/CV					
.000	.4735	.4230	.4575	.4681	.3893
.050	-.2511	-.4082	-.6370	-.8977	-.9245
.150	.1852	.5940	.4429	.8332	-.8075
.300	-.1273	-.2148	-.4035	.6794	-.6616
.520	-.2484	-.2542	-.5032	-.4040	-.4608
.685	-.4609	-.6932	-.7234	-.7508	-.7628
.775	-.2401	.4965	.7397	-.7636	-.7556
.900		-.4711	-.4840	-.6578	-.7089

ALPHA(4) = 4.250 BETAO (4) = -3.970

SECTION (1)RIGHT VERTICAL DEPENDENT VARIABLE CP

Z/BV	.1560	.3160	.6000	.8400	.9250
X/CV					
.000	.5334	.4893	.5314	.5537	.4785
.050	-.1132	-.3764	-.6329	-.8037	-.8152
.150	.0143	-.1278	-.3517	-.6937	-.7169
.300	-.1012	-.1802	-.2143	-.1940	-.2968
.520	-.1843	-.2010	-.2635	-.2255	-.1635
.685	-.4367	-.7203	-.7057	-.6925	-.6806
.775	-.2887	-.4902	-.7258	-.7015	-.6956
.900		-.4428	-.5735	-.7112	-.6762

ARC11-716 IA14 O4+T12+S12N25+AT10 RIGHT VERTICAL (RB1R32)

ALPHA(0) = -4.240 BETA0 (S) = 1.960

SECTION 11RIGHT VERTICAL DEPENDENT VARIABLE CP

Z/BV	.1580	.3160	.6000	.8400	.9250
X/CV					
.000	.5843	.5519	.5797	.5766	.5555
.050	.0637	-.2565	-.3655	-.5034	-.5056
.150	.0543	.0204	-.1051	-.2164	-.2071
.325	-.055	-.0955	-.0705	-.0750	.575
.525	-.1517	-.1356	-.1955	-.1701	-.1525
.675	-.4110	-.7135	-.6857	-.6805	.6585
.775	-.2520	-.4763	-.6566	-.6955	-.6827
.900		-.3912	-.6826	-.7068	.6585

ALPHA(0) = -4.220 BETA0 (S) = [illegible]

SECTION 11RIGHT VERTICAL DEPENDENT VARIABLE CP

Z/BV	.1580	.3160	.6000	.8400	.9250
X/CV					
.000	.5525	.5525	.5653	.5803	.5867
.050	.2045	.0864	-.0869	-.1552	-.1663
.150	.1524	.1238	.055	.054	.1517
.325	.0161	[illegible]	.0557	.335	.1512
.525	.557	-.0651	-.1172	-.1[illegible]5	-.1259
.675	-.4052	.6815	-.6862	.6816	-.6797
.775	-.2438	-.4946	.5715	.6711	-.6836
.900		-.3455	.6185	-.6837	-.6732

ALPHA(0) = 3.280 BETA0 (S) = 2.020

SECTION 11RIGHT VERTICAL DEPENDENT VARIABLE CP

Z/BV	.1580	.3160	.6000	.8400	.9250
X/CV					
.000	.5728	.5434	.5507	.5073	.5338
.050	.5080	.1813	.1459	.2141	.1947
.150	.2143	.2027	.1772	.1678	.2233
.325	.0458	.0954	.1098	.0965	.0539
.525	.0278	.0197	-.0589	-.0802	-.1278
.675	-.4550	-.6652	-.6856	-.6655	-.6745
.775	-.2855	-.5507	-.6494	-.6558	-.6792
.900		-.5851	-.6149	-.6666	-.6850

ARC11-716 IA14 O1+T12+S12N25+AT10 RIGHT VERTICAL (RB1R32)

ALPHAO(4) = -4.310 BETAO (8) = 4.040

SECTION (1)RIGHT VERTICAL DEPENDENT VARIABLE CP

Z/BV	.1580	.3160	.6000	.8400	.9250
X/CV					
.000	.5204	.5046	.4711	.4294	.4699
.050	.3884	.3265	.2483	.3274	.2980
.150	.2718	.2788	.2552	.2521	.2802
.300	.1851	.1731	.1627	.1524	.0916
.520	.0728	.0268	.0028	-.0573	-.1325
.685	-.4133	-.6401	-.6593	-.6571	-.6708
.775	-.2660	-.5213	-.6197	-.6402	-.6848
.900		-.5494	-.5619	-.6438	-.7024

ALPHAO(4) = -4.220 BETAO (9) = 8.060

SECTION (1)RIGHT VERTICAL DEPENDENT VARIABLE CP

Z/BV	.1580	.3160	.6000	.8400	.9250
X/CV					
.000	.4048	.3363	.2719	.2191	.2871
.050	.5737	.5520	.4591	.4986	.4583
.150	.4525	.4526	[illegible]	.3895	.3957
.300	.3502	.3152	.2852	.2651	.1835
.520	.1820	.1052	.0972	.0059	-.1156
.685	-.3802	-.5783	-.6104	-.6198	-.6457
.775	-.2214	-.3778	-.5397	-.5771	-.6272
.900		-.2790	-.4476	-.5457	-.6171

ALPHAO(4) = -4.210 BETAO (10) = 10.100

SECTION (1)RIGHT VERTICAL DEPENDENT VARIABLE CP

Z/BV	.1580	.3160	.6000	.8400	.9250
X/CV					
.000	.3287	.2077	.1461	.0786	.1820
.050	.6640	.6390	.5376	.5519	.5069
.150	.5423	.5316	.4646	.4411	.4378
.300	.4300	.3818	.3429	.3056	.2189
.520	.2364	.1415	.1174	.0288	-.0963
.685	-.3458	-.5213	-.5709	-.5914	-.6182
.775	-.2016	-.2862	-.4946	-.5447	-.5894
.900		-.2611	-.3585	-.4969	-.5706

ARC11-718 IA14 O1+T12+S12N25+AT10 RIGHT VERTICAL (RB1R32)

ALPHAO(5) = -2.920 BETAO (1) = -10.000

SECTION (1)RIGHT VERTICAL DEPENDENT VARIABLE CP

Z/BV	.1580	.3160	.6000	.8400	.9250
X/CV					
.000	.3067	.2210	.2247	.2397	.1323
.050	-.4220	-.5728	-.7289	-.8403	-.9075
.150	-.6027	-.5853	-.7232	-.8480	-.9029
.300	-.1321	-.5932	-.7367	-.8033	-.7260
.520	-.3310	-.4937	-.7552	-.6562	-.5899
.685	-.4932	-.6237	-.8128	-.5867	-.5767
.775	-.2452	-.6024	-.6997	-.5797	-.5245
.900		-.5291	-.6264	-.5941	-.5103

ALPHAO(5) = -2.930 BETAO (2) = -8.000

SECTION (1)RIGHT VERTICAL DEPENDENT VARIABLE CP

Z/BV	.1580	.3160	.6000	.8400	.9250
X/CV					
.000	.3779	.3143	.3294	.3417	.2463
.050	-.3410	-.5021	-.7045	-.8595	-.9673
.150	-.4543	-.5039	-.6655	-.8178	-.8653
.300	-.1203	-.4685	-.6350	-.6875	-.6960
.520	-.3038	-.3773	-.6337	-.6602	-.5298
.685	-.4839	-.6102	-.8563	-.6332	-.7211
.775	-.2275	-.5424	-.7058	-.5795	-.5270
.900		-.5216	-.5463	-.5445	-.4342

ALPHAO(5) = -2.930 BETAO (3) = -5.970

SECTION (1)RIGHT VERTICAL DEPENDENT VARIABLE CP

Z/BV	.1580	.3160	.6000	.8400	.9250
X/CV					
.000	.4554	.4017	.4311	.4368	.3588
.050	-.2350	-.4273	-.7145	-.8905	-.9297
.150	-.2115	-.3960	-.5178	-.8333	-.8197
.300	-.1397	-.3085	-.4293	-.6785	-.6761
.520	-.2644	-.2764	-.4079	-.4168	-.4638
.685	-.4625	-.6901	-.7393	-.7478	-.7710
.775	-.2714	-.4928	-.7531	-.7612	-.7637
.900		-.4696	-.4645	-.5541	-.6838

ARC11-716 IA14 O1+T12+S12N25+AT10 RIGHT VERTICAL (RB1R32)

ALPHAO(5) = -2.910 BETAO (4) = -3.960

SECTION (1)RIGHT VERTICAL DEPENDENT VARIABLE CP

Z/BV	.1580	.3160	.6000	.8400	.9250
X/CV					
.000	.5202	.4710	.5083	.5059	.4510
.050	-.1168	-.3838	-.6755	-.8034	-.8162
.150	-.0001	-.1273	-.3417	-.6913	-.7279
.300	-.1121	-.1973	-.2284	-.1998	-.2707
.520	-.2001	-.2151	-.2748	-.2404	-.1733
.685	-.4308	-.7099	-.7200	-.6931	-.6820
.775	-.2724	-.4906	-.7336	-.7028	-.6970
.900		-.4544	-.5412	-.7113	-.6846

ALPHAO(5) = -2.910 BETAO (5) = -2.000

SECTION (1)RIGHT VERTICAL DEPENDENT VARIABLE CP

Z/BV	.1580	.3160	.6000	.8400	.9250
X/CV					
.000	.5722	.5145	.5585	.5468	.5248
.050	.0519	-.2688	-.3896	-.5019	-.5146
.150	.0815	.0093	-.1235	-.2143	-.2210
.300	-.0672	-.1175	-.0891	-.0826	-.0755
.520	-.1471	-.1500	-.2011	-.1820	-.1667
.685	-.4109	-.7063	-.6932	-.6720	-.6707
.775	-.2740	-.4664	-.7052	-.6869	-.6823
.900		-.3948	-.6761	-.7006	-.6632

ALPHAO(5) = -2.910 BETAO (6) = .020

SECTION (1)RIGHT VERTICAL DEPENDENT VARIABLE CP

Z/BV	.1580	.3160	.6000	.8400	.9250
X/CV					
.000	.5805	.5322	.5606	.5541	.5624
.050	.2056	-.0886	-.1418	-.0790	-.0739
.150	.1380	.1036	.0408	.0666	.1696
.300	-.0028	-.0358	.0333	.0243	-.0115
.520	-.0731	-.0780	-.1332	-.1036	-.1401
.685	-.4070	-.6924	-.7077	-.6638	-.6879
.775	-.2668	-.4984	-.6878	-.6679	-.6936
.900		-.3838	-.6340	-.6801	-.6869

ARC11-716 IA14 C1+T12+S12N25+AT10 RIGHT VERTICAL (RB1R32)

ALPHAO(5) = -2.910 BETAO (7) = 2.050

SECTION (1)RIGHT VERTICAL DEPENDENT VARIABLE CP

Z/BV	.1580	.3160	.6000	.8400	.9250
X/CV					
.000	.5559	.5217	.5232	.4768	.5029
.050	.2843	.1356	.0407	.1892	.1782
.150	.1842	.1785	.1521	.1479	.1988
.300	.0682	.0568	.0875	.0719	.0349
.520	.0067	-.0368	-.0784	-.0985	-.1462
.685	-.4559	-.6814	-.7059	-.6764	-.6862
.775	-.2968	-.5510	-.6699	-.6705	-.6926
.900		-.3889	-.6181	-.6779	-.6996

ALPHAO(5) = -2.920 BETAO (8) = 4.080

SECTION (1)RIGHT VERTICAL DEPENDENT VARIABLE CP

Z/BV	.1580	.3160	.6000	.8400	.9250
X/CV					
.000	.5013	.4851	.4415	.3973	.4385
.050	.3690	.2953	.2029	.3082	.2852
.150	.2500	.2529	.2352	.2354	.2602
.300	.1563	.1527	.1431	.1380	.0767
.520	.0559	.0110	-.0146	-.0685	-.1471
.685	-.4312	-.6555	-.6753	-.6608	-.6809
.775	-.2649	-.5399	-.6379	-.6465	-.6959
.900		-.3598	-.5657	-.6493	-.7162

ALPHAO(5) = -2.930 BETAO (9) = 6.070

SECTION (1)RIGHT VERTICAL DEPENDENT VARIABLE CP

Z/BV	.1580	.3160	.6000	.8400	.9250
X/CV					
.000	.4344	.4091	.3417	.2932	.3561
.050	.4578	.4235	.3144	.3992	.3754
.150	.3325	.3450	.3077	.3106	.3236
.300	.2428	.2252	.1977	.2009	.1261
.520	.1052	.0487	.0254	-.0358	-.1394
.685	-.4125	-.6342	-.6514	-.6504	-.6726
.775	-.2432	-.4846	-.5925	-.6229	-.6656
.900		-.3171	-.5129	-.6005	-.6659

ARC11-718 IA14 O1+T12+S12N25+AT10 RIGHT VERTICAL (RB1R32)

ALPHAO(5) = -2.920 BETAO (10) = 8.110

SECTION (1)RIGHT VERTICAL DEPENDENT VARIABLE CP

Z/BV	.1580	.3160	.6000	.8400	.9250
X/CV					
.000	.3763	.3079	.2401	.1889	.2552
.050	.5476	.5246	.4113	.4745	.4363
.150	.4231	.4262	.3717	.3697	.3738
.300	.3239	.2893	.2643	.2453	.1652
.520	.1569	.0819	.0637	-.0119	-.1316
.685	-.3856	-.5971	-.6274	-.6304	-.6576
.775	-.2289	-.3877	-.5580	-.5929	-.6397
.900		-.2908	-.4549	-.5577	-.6311

ALPHAO(5) = -2.900 BETAO (11) = 10.100

SECTION (1)RIGHT VERTICAL DEPENDENT VARIABLE CP

Z/BV	.1580	.3160	.6000	.8400	.9250
X/CV					
.000	.3090	.1905	.1162	.0441	.1476
.050	.6332	.6119	.5061	.5298	.4868
.150	.5136	.5069	.4371	.4219	.4127
.300	.4000	.3550	.3179	.2849	.1971
.520	.2135	.1200	.0941	.0092	-.1167
.685	-.3474	-.5503	-.5880	-.6045	-.6379
.775	-.2060	-.3047	-.5153	-.5625	-.6113
.900		-.2793	-.3722	-.5113	-.5918

ALPHAO(6) = -.750 BETAO (1) = -10.040

SECTION (1)RIGHT VERTICAL DEPENDENT VARIABLE CP

Z/BV	.1580	.3160	.6000	.8400	.9250
X/CV					
.000	.2633	.1674	.1745	.1734	.0712
.050	-.4736	-.6068	-.7469	-.8553	-.8537
.150	-.6562	-.6092	-.7505	-.8658	-.8290
.300	-.1590	-.6309	-.7712	-.8331	-.7930
.520	-.3656	-.5435	-.7806	-.6785	-.6993
.685	-.4939	-.6379	-.7926	-.6130	-.6250
.775	-.2538	-.6439	-.7156	-.6279	-.6216
.900		-.5114	-.6449	-.6411	-.6390

ARC11-716 TA14 C4+T12+S12N25+AT10 RIGHT VERTICAL (RB1R32)

ORIGINAL PAGE IS OF POOR QUALITY

ALPHA(6) = -.740 BETA0 (2) = -9.040

SECTION 1)RIGHT VERTICAL DEPENDENT VARIABLE CP

Z/BV	.1580	.3160	.6000	.8400	.9250
X/CV					
.000	.3314	.2656	.2779	.2830	.1837
.050	-.3820	-.5285	-.7107	-.8599	-.9611
.150	-.5124	-.5509	-.6875	-.8433	-.9054
.300	-.1429	-.4971	-.6708	-.7148	.7131
.520	-.3592	.4164	-.6708	-.6891	-.5547
.685	-.4884	-.5943	-.8643	-.6241	.6435
.775	-.2547	-.5742	-.6914	-.5833	-.5179
.900		-.5109	-.5607	-.5635	-.4574

ALPHA(6) = -.720 BETA0 (3) = -9.950

SECTION 1)RIGHT VERTICAL DEPENDENT VARIABLE CP

Z/BV	.1580	.3160	.6000	.8400	.9250
X/CV					
.000	.4164	.3539	.3768	.3729	.2972
.050	-.2703	-.4636	-.7119	-.8982	-.9477
.150	-.2816	-.4215	-.5624	-.8609	-.9419
.300	-.1591	-.3450	-.4833	-.6432	-.7067
.520	-.5011	-.5149	-.4069	-.4592	-.4452
.685	-.4799	-.6585	-.7679	-.7663	-.7855
.775	-.2442	-.4927	-.5575	-.7764	-.7419
.900		-.4741	-.4533	-.5965	.5731

ALPHA(6) = -.710 BETA0 (4) = -9.940

SECTION 1)RIGHT VERTICAL DEPENDENT VARIABLE CP

Z/BV	.1580	.3160	.6000	.8400	.9250
X/CV					
.000	.4835	.4267	.4311	.4481	.3919
.050	-.1648	-.4182	-.6800	-.8269	-.8502
.150	-.0540	-.1890	-.3916	-.7281	-.7507
.300	-.1395	-.2203	-.2843	-.2591	-.4088
.520	-.2392	-.2490	-.3141	-.2799	-.2081
.685	-.4463	-.6936	-.7492	-.7035	-.6969
.775	-.2653	-.4819	-.7528	-.7227	-.7143
.900		-.4613	-.4735	-.7304	-.7141

ARC11-716 IA14 O1+T12+S12N25+AT10 RIGHT VERTICAL (RB1R32)

ALPHAO(6) = -.700 BETAO (5) = -2.010

SECTION (1)RIGHT VERTICAL DEPENDENT VARIABLE CP

Z/BV	.1580	.3160	.6000	.8400	.9250
X/CV					
.000	.5417	.4773	.5077	.4962	.4733
.050	.0112	-.3049	-.4161	-.5275	-.5441
.150	.0503	-.0246	-.1720	-.2700	-.2773
.300	-.0946	-.1549	-.1268	-.1123	-.1107
.520	-.1989	-.1830	-.2280	-.2077	-.1813
.685	-.4134	-.6823	-.7067	-.6724	-.6777
.775	-.2611	-.4541	-.7153	-.6911	-.6937
.900		-.4114	-.6031	-.7042	-.6805

ALPHAO(6) = -.690 BETAO (6) = .040

SECTION (1)RIGHT VERTICAL DEPENDENT VARIABLE CP

Z/BV	.1580	.3160	.6000	.8400	.9250
X/CV					
.000	.5543	.4983	.5157	.5115	.5237
.050	.1773	-.1072	-.1776	-.1194	-.1092
.150	.1119	.0791	.0153	.0371	.1561
.300	-.0278	-.0694	.0035	.0080	-.0355
.520	-.1020	-.1062	-.1526	-.1286	-.1441
.685	-.4092	-.6985	-.7133	-.6780	-.6948
.775	-.2708	-.4237	-.6950	-.6887	-.7036
.900		-.3784	-.6473	-.6990	-.7008

ALPHAO(6) = -.690 BETAO (7) = 2.030

SECTION (1)RIGHT VERTICAL DEPENDENT VARIABLE CP

Z/BV	.1580	.3160	.6000	.8400	.9250
X/CV					
.000	.5255	.4867	.4783	.4238	.4540
.050	.2550	.1003	.0266	.1622	.1543
.150	.1591	.1523	.1205	.1173	.1654
.300	.0412	.0278	.0587	.0461	.0086
.520	-.0329	-.0200	-.1041	-.1193	-.1681
.685	-.4925	-.6693	-.7159	-.6844	-.6985
.775	-.2818	-.3292	-.5913	-.6856	-.7094
.900		-.3777	-.6246	-.6923	-.7198

ARC11-716 IA14 OL+T12+S12N25+AT10 RIGHT VERTICAL (RB1R32)

ALPHAO (6) = -.710 BETAO (8) = 4.060

SECTION (1)RIGHT VERTICAL DEPENDENT VARIABLE CP

Z/BV	.1580	.3160	.6000	.8400	.9250
X/CV					
.000	.4675	.4499	.4025	.3448	.3910
.050	.3425	.2605	.1749	.2735	.2619
.150	.2188	.2160	.2038	.2041	.2358
.300	.1166	.1247	.1175	.1149	.0498
.520	.0283	-.0099	-.0372	-.0877	-.1709
.685	-.4089	-.6612	-.6823	-.6644	-.6907
.775	-.2723	-.5166	-.6466	-.6567	-.7089
.900		-.3537	-.5747	-.6536	-.7237

ALPHAO (6) = -.720 BETAO (9) = 8.080

SECTION (1)RIGHT VERTICAL DEPENDENT VARIABLE CP

Z/BV	.1580	.3160	.6000	.8400	.9250
X/CV					
.000	.3998	.3793	.3015	.2523	.3134
.050	.4268	.3852	.2803	.3668	.3411
.150	.3000	.3108	.2725	.2752	.2515
.300	.2095	.1960	.1685	.1668	.0926
.520	.0828	.0228	.0040	-.0590	-.1686
.685	-.4116	-.6374	-.6669	-.6495	-.6839
.775	-.2578	-.4871	-.6158	-.6354	-.6832
.900		-.3353	-.5377	-.6132	-.6355

ALPHAO (6) = -.730 BETAO (10) = 8.100

SECTION (1)RIGHT VERTICAL DEPENDENT VARIABLE CP

Z/BV	.1580	.3160	.6000	.8400	.9250
X/CV					
.000	.3380	.2807	.1949	.1432	.2167
.050	.5167	.4893	.3746	.4326	.4043
.150	.3891	.3956	.3323	.3341	.3426
.300	.2917	.2607	.2178	.2170	.1375
.520	.1335	.0574	.0382	-.0207	-.1512
.685	-.4016	-.6037	-.6263	-.6210	-.6606
.775	.2389	-.4291	-.5657	-.5973	-.6468
.900		-.2788	-.4564	.5	-.6347

ORIGINAL PAGE IS OF POOR QUALITY

ARC11-716 IA14 OL+T12+S12N25+AT10 RIGHT VERTICAL (PB1R32)

ALPHAO(6) = -.740 BETAO (11) = 10.160

SECTION (1)RIGHT VERTICAL DEPENDENT VARIABLE CP

Z/BV	.1580	.3160	.6000	.8400	.9250
X/CV					
.000	.2686	.1618	.0785	-.0057	.0945
.050	.6006	.5842	.4806	.4990	.4645
.150	.4805	.4814	.4119	.3962	.3944
.300	.3712	.3291	.2965	2576	.1785
.520	.1959	.1093	.0787	.0032	-.1326
.685	-.5538	-.5462	-.5772	-.5982	-.6366
.775	-.2155	-.3090	-.5078	-.5618	-.6107
.900		-.2788	-.3691	-.5065	-.5842

ALPHAO(7) = 2.030 BETAO (1) = -10.000

SECTION (1)RIGHT VERTICAL DEPENDENT VARIABLE CP

Z/BV	.1580	3160	.6000	.8400	.9250
X/CV					
.000	.2133	.1245	.1162	.1037	-.0011
.050	-.5766	-.6171	-.7538	-.8518	-.7996
.150	-.7585	-.6309	-.7674	-.8674	-.8138
.300	-.1657	-.6823	-.7940	-.8345	-.7653
.520	-.3876	-.6121	-.8016	-.6778	-.6637
.685	-.4923	-.6604	-.7729	-.6225	-.6009
.775	-.2487	-.6507	-.7181	-.6444	-.5947
.900		-.4936	-.6467	-.6503	-.6115

ALPHAO(7) = 2.060 BETAO (2) = -8.030

SECTION (1)RIGHT VERTICAL DEPENDENT VARIABLE CP

Z/BV	.1580	.3160	.6000	.8400	.9250
X/CV					
.000	.2811	.2256	.2320	.2017	.1083
.050	-.4484	-.5363	-.7062	-.8832	-.9425
.150	-.6029	-.5340	-.6955	-.8644	-.9291
.300	-.1425	-.5319	-.6991	-.7665	-.7338
.520	-.5490	-.4624	-.6968	-.7329	-.6005
.685	-.4762	-.5977	-.8546	-.6728	-.6667
.775	-.2452	-.6001	-.6882	-.6421	-.5539
.900		-.5004	-.5882	-.6351	-.4907

ARC11-716 IA14 O1+T12+S12N25+AT10 RIGHT VERTICAL (RB1RS2)

ALPHAO(2) = 2.080 BETAO (3) = -5.990

SECTION (1)RIGHT VERTICAL DEPENDENT VARIABLE CP

Z/BV	.1580	.3160	.6000	.8400	.9250
X/CV					
.000	.3729	.3112	.3280	.3113	.2344
.050	-.3346	-.4768	-.6810	-.8872	-.9512
.150	-.3458	-.4381	-.5829	-.8530	-.9668
.300	-.1565	-.3775	-.5221	-.5771	-.7292
.520	-.3133	-.3414	-.4844	-.4872	-.4259
.685	-.4417	-.6032	-.7931	-.7588	-.7935
.775	-.2654	-.5122	-.7678	-.7353	-.7939
.900		-.4750	-.4692	-.4989	-.5523

ALPHAO(2) = 1.940 BETAO (4) = -4.010

SECTION (1)RIGHT VERTICAL DEPENDENT VARIABLE CP

Z/BV	.1580	.3160	.6000	.8400	.9250
X/CV					
.000	.4519	.3832	.4157	.3909	.3360
.050	-.1935	-.4431	-.6820	-.8314	-.8455
.150	-.0817	-.2167	-.4061	-.7403	-.7735
.300	-.1575	-.2531	-.3132	-.2672	-.3144
.520	-.2773	-.2794	-.3264	-.3059	-.2278
.685	-.3861	-.6265	-.7653	-.7111	-.7054
.775	-.2726	-.4613	-.7393	-.7347	-.7262
.900		-.4452	-.4516	-.7132	-.7336

ALPHAO(2) = 1.950 BETAO (5) = -2.000

SECTION (1)RIGHT VERTICAL DEPENDENT VARIABLE CP

Z/BV	.1580	.3160	.6000	.8400	.9250
X/CV					
.000	.5146	.4373	.4570	.4408	.4258
.050	.0124	-.3158	-.4049	-.5197	-.5177
.150	.0268	-.0407	-.1954	-.2413	-.2603
.300	-.1207	-.1974	-.1435	-.1304	-.1246
.520	-.2164	-.2065	-.2414	-.2188	-.1984
.685	-.3842	-.6495	-.7238	-.6752	-.6872
.775	-.2640	-.4405	-.7230	-.7019	-.7090
.900		-.4228	-.5064	-.7156	-.7022

ARC11-716 IA14 O&+T12+S12NB5+AT10 RIGHT VERTICAL (RB1R32)

ALPHAO(7) = 1.990 BETAO (6) = .040

SECTION (1)RIGHT VERTICAL DEPENDENT VARIABLE CP

Z/BV	.1580	.3160	.6000	.8400	.9250
X/CV					
.000	.5203	.4549	.4581	.4506	.4659
.050	.1436	-.1368	-.2163	-.1643	-.1251
.150	.0785	.0430	-.0246	.0031	.1262
.300	-.0807	-.1179	-.0414	-.0354	-.0642
.520	-.1370	-.1364	-.1848	-.1544	-.1733
.645	-.4138	-.6976	-.7277	-.6835	-.7053
.775	-.2908	-.4723	-.7095	-.6998	-.7180
.900		-.3791	-.6539	-.7067	-.7190

ALPHAO(7) = 1.930 BETAO (7) = 2.030

SECTION (1)RIGHT VERTICAL DEPENDENT VARIABLE CP

Z/BV	.1580	.3160	.6000	.8400	.9250
X/CV					
.000	.5063	.4455	.4280	.3806	.4054
.050	.2261	.0676	.0051	.1272	.1284
.150	.1267	.1292	.0968	.0955	.1356
.300	.0079	-.0270	.0268	.0183	-.0203
.520	-.0791	-.0814	-.1399	-.1384	-.1887
.645	-.4224	-.6896	-.7174	-.6848	-.7018
.775	-.2778	-.5003	-.6862	-.6917	-.7179
.900		-.3619	-.6230	-.6964	-.7274

ALPHAO(7) = 1.930 BETAO (8) = 4.070

SECTION (1)RIGHT VERTICAL DEPENDENT VARIABLE CP

Z/BV	.1580	.3160	.6000	.8400	.9250
X/CV					
.000	.4528	.4061	.3543	.2954	.3564
.050	.5009	.2133	.1565	.2343	.2320
.150	.1752	.1681	.1669	.1635	.2098
.300	.0845	.0933	.0848	.0861	.0205
.520	-.0015	-.0341	-.0693	-.1128	-.1350
.645	-.4312	-.6683	-.6946	-.6701	-.7019
.775	-.2605	-.3087	-.6610	-.6729	-.7224
.900		-.3413	-.5802	-.6635	-.7287

ARC11-716 IA14 OL+T12+S12N25+AT10 RIGHT VERTICAL (RB1R32)

ALPHA(T) = 1.000 BETA0 (B) = 6.100

SECTION 11RIGHT VERTICAL DEPENDENT VARIABLE CP

Z/BV	.1580	.3160	.6000	.8400	.9250
X/CV					
.000	.3554	.3580	.2514	.2022	.2535
.050	.3469	.3451	.2455	.3226	.3078
.100	.2515	.2747	.2372	.2350	.2655
.300	.1692	.1597	.1394	.1342	[illegible]
.500	.0541	-.0010	-.0214	-.0964	-.1908
.645	-.4[illegible]	-.6420	-.6682	-.6[illegible]	-.6519
.775	-.5346	-.4794	-.6265	-.65[illegible]	[illegible]
.900		-.3212	-.5505	-.6240	-.6643

ALPHA(T) = 1.950 BETA0 (B) = 6.100

SECTION 11RIGHT VERTICAL DEPENDENT VARIABLE CP

Z/BV	.1580	.3160	.6000	.8400	.9250
X/C					
.000	.2445	.2573	.1427	[illegible]	[illegible]
.050	.4554	.4510	.3342	.3754	[illegible]
.150	.3254	.3551	.2[illegible]4	[illegible]	[illegible]
.300	.2454	.2[illegible]4	[illegible]	.3754	[illegible]
.500	[illegible]	[illegible]74	[illegible]	[illegible]	[illegible]
.645	.4[illegible]	.5154	[illegible]	[illegible]	[illegible]
.775	-.2475	-.4[illegible]	[illegible]	[illegible]	[illegible]
.900		-.3[illegible]	-.5157	[illegible]	[illegible]

ALPHA(T) = 1.94[illegible] BETA0 (B) = 10.140

SECTION 11RIGHT VERTICAL DEPENDENT VARIABLE CP

Z/BV	.1580	.3160	.6000	.8400	.9250
X/C					
.000	.2115	.1[illegible]6	.0[illegible]1	-.0666	.0197
.050	.5257	.5[illegible]8	.4550	.4481	.41[illegible]
.150	.4091	.4263	.3631	.3522	.3580
.300	.3126	.2670	.2525	.2904	.1375
.520	.1479	.0639	.0415	-.0233	-.1601
.645	-.5690	-.5809	-.5995	-.6085	-.6457
.775	-.2295	-.5414	-.5243	-.5781	-.6227
.900		.2775	-.3750	-.5159	-.5970

ARC11-716 A14 OS+T12+S12N25+AT10 RIGHT VERTICAL RB1932

ALPHA(8) = 5.070 BETA(1) = -9.990

SECTION (1)RIGHT VERTICAL DEPENDENT VARIABLE CP

Z/BV	.1580	.3160	.6000	.8400	.9250
X/CV					
.005	.1793	.0982	.0809	.0545	-.0588
.050	[illegible]	.6495	-.7723	-.8514	-.7942
.150	[illegible]	-.6531	-.7848	-.8745	-.8089
.300	[illegible]	[illegible]	-.6113	-.8494	-.7613
.525	.4245	[illegible]	[illegible]	-.6938	-.6621
.675	.3534	[illegible]	-.7718	-.6419	-.6261
.775	[illegible]	[illegible]	.7551	-.6608	-.6197
[illegible]		[illegible]	-.6536	-.6750	-.6274

ALPHA([illegible]) = [illegible] BETA(2) = -8.000

SECTION ([illegible]) RIGHT VERTICAL DEPENDENT VARIABLE CP

Z/BV	[illegible]	[illegible]	[illegible]	.8400	.9250
X/CV					
[illegible]	[illegible]	.1964	[illegible]	.1712	[illegible]
[illegible]	[illegible]	-.5645	[illegible]	[illegible]	-.9422
[illegible]	[illegible]	[illegible]	[illegible]	-.9454	-.9227
[illegible]	[illegible]	[illegible]	[illegible]	[illegible]	-.7398
[illegible]	[illegible]	[illegible]	[illegible]	[illegible]	[illegible]
[illegible]	[illegible]	[illegible]	[illegible]	[illegible]	[illegible]
[illegible]	[illegible]	[illegible]	[illegible]	[illegible]	[illegible]
[illegible]		[illegible]	[illegible]	[illegible]	[illegible]

ALPHA([illegible]) = [illegible] BETA([illegible]) = [illegible]

SECTION ([illegible]) RIGHT VERTICAL DEPENDENT VARIABLE CP

Z/BV	.1580	.3160	.6000	.8400	.9250
X/CV					
[illegible]	.5645	.2833	.5081	.2734	.1964
[illegible]	-.3473	-.5074	-.6649	[illegible]	-.9553
[illegible]	.2223	-.4451	.5815	-.8787	-.8723
[illegible]	-.2168	-.3734	-.5163	.5919	-.7334
[illegible]	-.3507	-.3542	-.4810	.4886	-.4813
[illegible]	.3231	-.3511	[illegible]	.7716	-.7824
[illegible]	.2805	[illegible]	-.7114	-.7266	-.7891
[illegible]		-.3778	-.4625	-.5039	-.5763

ARC11-716 IA14 C8+T12+S12N25+AT10 RIGHT VERTICAL (RB1R32)

ALPHAC A = 3.950 BETAC (A) = -3.59

[illegible] 1 RIGHT [illegible] DEPENDENT VARIABLE CP

[illegible]	.1580	.3160	.6000	[illegible]	[illegible]
[illegible]					
AX	4594	5553	.5857	.5529	[illegible]
[illegible]	-.1436	4551	-.6519	.6267	[illegible]
[illegible]	[illegible]	-.1992	-.4[illegible]	[illegible]	[illegible]
[illegible]	[illegible]	-.2464	[illegible]	[illegible]	[illegible]
[illegible]	[illegible]	[illegible]	[illegible]	[illegible]	[illegible]
[illegible]	[illegible]	[illegible]	[illegible]	[illegible]	[illegible]
[illegible]	[illegible]	.46[illegible]	[illegible]	[illegible]	[illegible]
[illegible]		[illegible]	[illegible]	[illegible]	[illegible]

[illegible] 5.950 [illegible] 5 [illegible]

[illegible] DEPENDENT VARIABLE [illegible]

[illegible]	[illegible]	[illegible]	[illegible]	[illegible]	[illegible]
[illegible]					
[illegible]	[illegible]	[illegible]	[illegible]	[illegible]	[illegible]
[illegible]		[illegible]	[illegible]	[illegible]	[illegible]
[illegible]	[illegible]	[illegible]	[illegible]	[illegible]	[illegible]
[illegible]	[illegible]	[illegible]	[illegible]	[illegible]	[illegible]
[illegible]		[illegible]		[illegible]	[illegible]
[illegible]	[illegible]	[illegible]	[illegible]	[illegible]	[illegible]
[illegible]	[illegible]	[illegible]	[illegible]	[illegible]	[illegible]
[illegible]		[illegible]	[illegible]	[illegible]	[illegible]

[illegible] 6 [illegible] 4

[illegible] DEPENDENT VARIABLE [illegible]

[illegible]	[illegible]	516[illegible]	[illegible]	[illegible]	[illegible]
[illegible]					
[illegible]	4[illegible]	4241	417[illegible]	.5922	[illegible]
[illegible]	1256	-.147[illegible]	-.2275	-.1885	.1468
[illegible]	[illegible]	[illegible]	-.1954	[illegible]	[illegible]
[illegible]	[illegible]	[illegible]	[illegible]	[illegible]	[illegible]
[illegible]	[illegible]	-.166[illegible]	[illegible]	[illegible]	[illegible]
[illegible]	[illegible]	-.6828	.7571	.6864	[illegible]
[illegible]	[illegible]	[illegible]	-.7166	[illegible]	[illegible]
[illegible]		5840	6[illegible]	[illegible]	[illegible]

ARC11-716 TA14 O1+T12+S12N25+AT10 RIGHT VERTICAL (RB1R32)

ALPHAO(8) = 4.030 BETAO (7) = 2.050

SECTION (1)RIGHT VERTICAL DEPENDENT VARIABLE CP

X/CV \ Z/BV	.1580	.3160	.6000	.8400	.9250
.000	.4907	.4145	.3786	.3286	.3582
.050	.2023	.0530	-.0105	.0967	.1037
.150	.1008	.1031	.0359	.0558	.1078
.300	-.0228	-.0609	-.0012	-.0067	-.0479
.520	-.1078	-.1117	-.1629	-.1583	-.1950
.685	-.4494	-.6962	-.7266	-.6896	-.7127
.775	-.2950	-.4923	-.6997	-.7029	-.7334
.900		-.3592	-.6390	-.7039	-.7406

ALPHAO(8) = 4.020 BETAO (8) = 4.070

SECTION (1)RIGHT VERTICAL DEPENDENT VARIABLE CP

X/CV \ Z/BV	.1580	.3160	.6000	.8400	.9250
.000	.4084	.3740	.3090	.2504	.2918
.050	.2727	.1890	.1300	.2100	.2099
.150	[illegible]	.1347	.1364	.1387	.1900
.300	[illegible]	.0358	.0601	.0613	-.0004
.520	-.0570	-.0534	-.0885	-.1293	-.2091
.685	-.4138	-.6726	-.7029	-.6677	-.7094
.775	-.2792	-.4856	-.6691	-.6825	-.7317
.900		-.3362	-.5917	-.6652	-.7309

ALPHAO(8) = 4.010 BETAO (9) = 6.080

SECTION (1)RIGHT VERTICAL DEPENDENT VARIABLE CP

X/CV \ Z/BV	.1580	.3160	.6000	.8400	.9250
.000	.3243	.3053	.2183	.1615	.2104
.050	.3510	.3036	.2173	.2910	.2851
.150	.2151	.2336	.2105	.2047	.2456
.300	.1272	.1258	.1120	.1084	.0381
.520	.0216	-.0207	-.0471	-.1046	-.2128
.685	-.4251	-.6472	-.6739	-.6641	-.7031
.775	.2591	-.4786	-.6410	-.6687	-.7103
.900		-.3231	-.5646	-.6362	-.7108

ARC11-716 IA14 O1+T12+S12N25+AT10 RIGHT VERTICAL (RB1R32)

ALPHAO(8) = 4.060 BETAO (10) = 8.110

SECTION (1)RIGHT VERTICAL DEPENDENT VARIABLE CP

Z/BV	.1580	.3160	.6000	.8400	.9250
X/CV					
.000	.2511	.2179	.1029	.0450	.1050
.050	.4191	.4042	.3075	.3468	.3361
.150	.2916	.3185	.2595	.2524	.2864
.300	.2117	.1929	.1461	.1442	.0661
.520	.0796	.0160	-.0347	-.0824	-.2042
.685	-.4143	-.6154	-.6520	-.6421	-.6854
.775	-.2474	-.4562	-.6121	-.6475	-.6854
.900		-.3184	-.5222	-.5977	-.6761

ALPHAO(8) = 4.050 BETAO (11) = 10.160

SECTION (1)RIGHT VERTICAL DEPENDENT VARIABLE CP

Z/BV	.1580	.3160	.6000	.8400	.9250
X/CV					
.000	.1739	.0839	-.0455	-.1307	-.0320
.050	.4686	.4926	.3982	.4142	.3890
.150	.3573	.3961	.3265	.3279	.3356
.300	.2796	.2340	.2338	.2120	.1162
.520	[illegible]	[illegible]	.0246	-.0391	-.1798
.685	[illegible]	-.5871	-.5965	-.6119	-.6508
.775	-.2449	-.4174	-.5244	-.5834	-.6192
.900		-.2721	-.3916	-.5132	-.5889

ALPHAO(8) = 5.090 BETAO (1) = -9.980

SECTION (1)RIGHT VERTICAL DEPENDENT VARIABLE CP

Z/BV	.1580	.3160	.6000	.8400	.9250
X/CV					
.000	.1563	.0838	.0550	-.0026	-.1064
.050	-.5943	-.6669	-.7816	-.8416	-.7933
.150	-.3155	-.6585	-.8035	-.8652	-.7923
.300	-.3560	-.7088	-.8175	-.8570	-.7609
.520	-.4654	-.4317	-.7980	-.7184	-.7211
.685	-.3903	-.4460	-.7543	-.6631	-.6613
.775	-.3074	-.4702	-.7806	-.6810	-.6553
.900		-.3386	-.6707	-.6964	-.7058

ARC11-716 IA14 C1+T12+S12N25+AT10 RIGHT VERTICAL (PB1R32)

ALPHAO(9) = 5.960 BETAO (2) = -7.980

SECTION (1)RIGHT VERTICAL DEPENDENT VARIABLE CP

X/CV \ Z/BV	.1580	.3160	.6000	.8400	.9250
.000	.2784	.1818	.1882	.1326	.0383
.050	-.4927	-.5884	-.7070	-.8646	-.9288
.150	-.1560	-.5502	-.7138	-.8462	-.9101
.300	-.2972	-.5359	-.7263	-.7590	-.7447
.520	-.4277	-.4836	-.6940	-.7309	-.6300
.685	-.3757	-.4532	-.7307	-.6623	-.6435
.775	-.2056	-.3784	-.6594	-.6398	-.5713
.900		-.3167	-.5475	-.6478	-.5283

ALPHAO(9) = 5.960 BETAO (3) = -5.960

SECTION (1)RIGHT VERTICAL DEPENDENT VARIABLE CP

X/CV \ Z/BV	.1580	.3160	.6000	.8400	.9250
.000	.3803	.2610	.2768	.2355	.1594
.050	-.3715	-.5203	-.6579	-.9125	-.9591
.150	-.0677	-.4234	-.5555	-.5856	-.8806
.300	-.2478	-.3744	-.5580	-.5884	-.7417
.520	-.3733	-.3735	-.4449	-.4925	-.3767
.685	-.3764	-.4946	-.8080	-.7680	-.7827
.775	-.2917	-.5323	-.6246	-.6386	-.7451
.900		-.3562	-.4515	-.4869	-.4588

ALPHAO(9) = 5.960 BETAO (4) = -3.990

SECTION (1)RIGHT VERTICAL DEPENDENT VARIABLE CP

X/CV \ Z/BV	.1580	.3160	.6000	.8400	.9250
.000	.4323	.3300	.3421	.3031	.2566
.050	-.1705	-.4686	-.6272	-.8327	-.8368
.150	-.0741	-.1994	-.4401	-.7310	-.8049
.300	-.2042	-.3144	-.3400	-.3032	-.3055
.520	-.3268	-.3245	-.3551	-.3354	-.2708
.685	-.3375	-.5296	-.7843	-.7083	-.7238
.775	-.2692	-.4680	-.7315	-.7436	-.7442
.900		-.3983	-.4190	-.5500	-.7308

ARC11-716 IA14 OL+T12+3L2N25+AT10 RIGHT VERTICAL (RB1R32)

ORIGINAL PAGE IS OF POOR QUALITY

ALPHAO(9) = 5.970 BETAO (5) = -1.970

SECTION (1)RIGHT VERTICAL DEPENDENT VARIABLE CP

X/CV \ Z/BV	.1580	.3160	.6000	.8400	.9250
.000	.5201	.3779	.3798	.3373	.3355
.050	.0313	-.3409	-.4447	-.5586	-.5561
.150	-.0040	-.0859	-.2533	-.2876	-.2790
.300	-.1689	-.2585	-.2046	-.1911	-.1638
.520	-.2594	-.2577	-.2976	-.2748	-.2537
.685	-.7745	-.6217	-.7657	-.6561	-.7170
.775	-.2992	-.4374	-.7540	-.7300	-.7396
.900		-.4619	-.4444	-.7346	-.7372

ALPHAO(9) = 5.980 BETAO (6) = .030

SECTION (1)RIGHT VERTICAL DEPENDENT VARIABLE CP

X/CV \ Z/BV	.1580	.3160	.6000	.8400	.9250
.000	.4885	.3962	.3775	.3433	.3650
.050	.1081	-.1784	-.3054	-.2250	-.2167
.150	.0392	-.0063	-.0819	-.0671	.0553
.300	-.1169	-.1783	-.1149	-.0979	-.1201
.520	-.1901	-.1874	-.3360	-.2026	-.2219
.685	-.4128	-.6885	-.7465	-.6866	-.7261
.775	-.3085	-.4569	-.7316	-.7128	-.7430
.900		-.4107	-.5538	-.7163	-.7420

ALPHAO(9) = 5.970 BETAO (7) = 2.030

SECTION (1)RIGHT VERTICAL DEPENDENT VARIABLE CP

X/CV \ Z/BV	.1580	.3160	.6000	.8400	.9250
.000	.4975	.3834	.3422	.2834	.3168
.050	.1756	.0166	-.0724	.0577	.0691
.150	.0734	.0696	.0012	.0219	.0758
.300	-.0614	-.0940	-.0367	-.0341	-.0787
.520	-.1278	-.1344	-.1980	-.1757	-.2362
.685	-.4236	-.7007	-.7336	-.6899	-.7231
.775	-.3151	-.4915	-.7094	-.7074	-.7472
.900		-.3721	-.6415	-.7044	-.7448

ALPHAO(8) = 5.950 BETAO (8) = 4.080

SECTION (1)RIGHT VERTICAL DEPENDENT VARIABLE CP

Z/BV	.1580	.3160	.6000	.8400	.9250
X/CV					
.000	.4787	.3458	.2720	.2147	.2590
.050	.2355	.1567	.0702	.1765	.1845
.150	.1131	.1008	.0976	.1044	.1614
.300	[illegible]	.0145	.0300	.0381	-.0255
.520	-.[illegible]35	-.0913	-.1116	-.1480	-.2310
.675	-.4101	-.6016	-.7057	-.6722	-.7147
.775	-.3[illegible]	-.4[illegible]	-.6769	-.6939	-.7390
.900		-.3[illegible]	-.6060	-.6715	-.7344

ALPHAO (9) = [illegible] BETAO (9) = 6.100

SECTION (1)RIGHT VERTICAL DEPENDENT VARIABLE CP

Z/BV	[illegible]	.3160	.6000	.8400	.9250
X/CV					
[illegible]	.3401	.2857	[illegible]	.1301	.1798
[illegible]	[illegible]	.2127	[illegible]	.2561	.2557
.15[illegible]	[illegible]	.1[illegible]	[illegible]	.1737	.2[illegible]9
[illegible]	[illegible]	[illegible]	[illegible]	[illegible]	.0130
.520	[illegible]	-.[illegible]	[illegible]	[illegible]	[illegible]
.675	-.4277	-.6551	-.[illegible]3	-.625	-.7174
.775	[illegible]	-.[illegible]	-.6502	-.[illegible]74	-.7195
.9[illegible]		-.3[illegible]9	.5756	-.[illegible]05	.7185

ALPHAO (9) = 5.92[illegible] BETAO (10) = 9.130

SECTION (1 RIGHT VERTICAL DEPENDENT VARIABLE CP

Z/B[illegible]	.1580	.3160	.6000	.8400	.9250
X/CV					
.000	.2750	.2056	.0851	.0194	.0723
.050	.3798	.3627	.2772	.3174	.3111
.150	.2494	.2764	.2307	.2258	.2657
.300	.1644	.1536	.1225	.1296	.0488
.520	.0337	-.0025	-.0514	-.0926	-.2216
.675	-.4689	-.6257	-.6633	-.6325	-.6917
.775	-.2741	-.4985	-.6229	-.6488	-.6907
.900		-.3340	-.5229	-.5902	-.6624

ARC11-716 IA14 C4+T12+S12N25+AT10 RIGHT VERTICAL (RB1R32)

ALPHAO (9) = 5.390 BETAO (11) = 10.150

SECTION (1)RIGHT VERTICAL DEPENDENT VARIABLE CP

Z/BV	.1580	.3160	.6000	.8400	.9250
X/CV					
.000	.1804	.0734	-.0599	-.1548	-.0694
.050	.4518	.4483	.3750	.3859	.3693
.150	.3061	.3492	.2979	.3024	.3181
.300	.2139	.2013	.2005	.1920	.1012
.520	[illegible]	.0417	.0107	-.0517	-.1930
.685	-.4813	-.5884	-.5887	-.6081	-.6535
.775	.2430	-.4560	-.5073	-.5810	-.6163
.900		-.2805	-.3963	-.5111	-.5[illegible]2

ALPHAO (10) = 8.080 BETAO (1) = -9.950

SECTION (1)RIGHT VERTICAL DEPENDENT VARIABLE CP

Z/BV	.1580	.3160	.6000	.8400	.9250
X/CV					
.000	.2780	.0277	-.0029	-.0563	-.1467
.050	-.3287	-.6739	-.8217	-.8399	-.7080
.150	-.2525	.7147	-.8274	-.8661	-.7697
.300	-.4066	-.5510	-.8055	-.8658	-.7579
.520	-.5308	-.4622	-.7692	-.7468	-.7442
.685	-.4233	-.4250	-.7245	-.6869	-.6736
.775	-.3662	-.3727	-.7403	-.7109	-.6740
.900		-.3406	-.6433	-.7301	-.7269

ALPHAO (10) = 8.110 BETAO (2) = -7.950

SECTION (1)RIGHT VERTICAL DEPENDENT VARIABLE CP

Z/BV	.1580	.3160	.6000	.8400	.9250
X/CV					
.000	.4445	.1812	.1206	.0894	-.0025
.050	-.4569	-.5979	-.7574	-.7952	-.8894
.150	-.1435	-.5958	-.7622	-.8125	-.8523
.300	-.3096	-.4564	-.6997	-.7713	-.7703
.520	-.4603	-.4322	-.6558	-.7031	-.6604
.685	-.4003	-.4592	-.7099	-.5907	-.5969
.775	-.3408	-.4467	-.6517	-.6050	-.5702
.900		-.3229	-.5120	-.6196	-.5707

ARC11-718 IA14 O1+T12+S12N25+AT10 RIGHT VERTICAL (RB1R32)

ALPHAO(10) = 8.130 BETAO (3) = -5.340

SECTION (1)RIGHT VERTICAL DEPENDENT VARIABLE CP

X/C.V \ Z/BV	.1580	.3160	.6000	.8400	.9250
.000	.5507	.2386	.2144	.1870	.1246
.050	-.3400	-.5510	-.7197	-.8010	-.8950
.150	-.1036	-.4790	-.6807	-.7329	-.8470
.300	-.2795	-.3502	-.5653	-.6272	-.6589
.520	-.4105	-.3987	-.4633	-.5908	-.5441
.685	-.3950	-.4746	-.6051	-.6458	-.6514
.775	-.3189	-.5228	-.5633	-.5578	-.5263
.900		-.3415	-.4036	-.5329	-.4720

ALPHAO(10) = 7.980 BETAO (4) = -3.970

SECTION (1)RIGHT VERTICAL DEPENDENT VARIABLE CP

X/C.V \ Z/BV	.1580	.3160	.6000	.8400	.9250
.000	.3180	.3020	.2824	.2487	.2115
.050	-.2075	-.4762	-.6548	-.7641	-.8281
.150	-.0690	-.2539	-.4851	-.6059	-.6765
.300	-.2231	-.3027	-.3280	-.4241	-.3940
.520	-.3444	-.3684	-.3618	-.3566	-.3132
.685	-.4316	-.5116	-.7998	-.6976	-.7073
.775	-.3121	-.4761	-.5810	-.7321	-.7345
.900		-.4248	-.4215	-.4959	-.5415

ALPHAO(10) = 8.010 BETAO (5) = -1.970

SECTION (1)RIGHT VERTICAL DEPENDENT VARIABLE CP

X/C.V \ Z/BV	.1580	.3160	.6000	.8400	.9250
.000	.5563	.3539	.3247	.2897	.2877
.050	-.0090	-.3548	-.4931	-.5539	-.5703
.150	-.0190	-.1480	-.2270	-.3139	-.3490
.300	-.1906	-.2491	-.2262	-.2152	-.2122
.520	-.2901	-.2907	-.3122	-.2980	-.2968
.685	-.4320	-.6127	-.7683	-.7030	-.7268
.775	-.3243	-.4477	-.7621	-.7402	-.7531
.900		-.4736	-.4471	-.6946	-.7495

ARC11-716 IA14 OL+T12+S12N25+AT1D RIGHT VERTICAL (RB1R32)

ORIGINAL PAGE IS OF POOR QUALITY

ALPHAO(10) = 7.030 BETAO (6) = .060

SECTION (1)RIGHT VERTICAL DEPENDENT VARIABLE CP

X/CV \ Z/BV	.1580	.3160	.6000	.8400	.9250
.000	.5364	.3673	.3317	.2447	.3225
.050	.0556	-.1963	-.2440	-.2401	-.2487
.150	.0197	-.0850	-.1145	-.0955	-.0926
.300	-.1484	-.1800	-.1412	-.1219	-.1450
.520	-.2186	-.2223	-.2549	-.2239	-.2544
.645	-.4110	-.6838	-.7481	-.6999	-.7394
.775	-.5567	-.4576	-.7398	-.7298	-.7608
.900		-.4286	-.5442	-.7318	-.7608

ALPHAO(10) = 7.970 BETAO (7) = 2.050

SECTION (1)RIGHT VERTICAL DEPENDENT VARIABLE CP

X/CV \ Z/BV	.1580	.3160	.6000	.8400	.9250
.000	.5530	.3634	.3145	.2445	.2761
.050	.1720	-.0236	-.0204	.0249	.0197
.150	.0465	-.0159	-.0194	-.0084	-.0226
.300	-.1445	-.1637	-.1441	-.1623	-.1103
.520	-.1478	-.1370	-.2168	-.2039	-.2566
.645	-.4525	-.7309	-.7332	-.7043	-.7332
.775	-.5397	-.4757	-.7164	-.7276	-.7601
.900		-.3794	-.6523	-.7200	-.7165

ALPHAO(10) = 7.950 BETAO (8) = 4.080

SECTION (1)RIGHT VERTICAL DEPENDENT VARIABLE CP

X/CV \ Z/BV	.1580	.3160	.6000	.8400	.9250
.000	.5090	.3299	.2678	.1669	.2096
.050	.2015	.1084	.1151	.1404	.1241
.150	.0821	.0459	.0652	.0712	.0480
.300	-.0403	-.0088	-.0018	.0065	-.0514
.520	-.0988	-.1049	-.1474	-.1583	-.2501
.645	-.4902	-.6849	-.7006	-.6780	-.7180
.775	-.3619	-.5339	-.6744	-.7079	-.7449
.900		-.3433	-.6212	-.6798	-.7278

ARC11-718 IA14 O1+T12+S12N25+AT10 RIGHT VERTICAL (RB1R32)

ALPHAO(10) = 7.920 BETAO (9) = 8.110

SECTION (1)RIGHT VERTICAL DEPENDENT VARIABLE CP

Z/BV	.1580	.3160	.6000	.8400	.9250
X/CV					
.000	.4867	.2764	.2041	.0928	.1416
.050	.2858	.2190	.2035	.2286	.2114
.150	.1581	.1395	.1460	.1502	.1215
.300	.0379	.0555	.0687	.0661	-.0037
.520	-.0706	-.0705	-.0885	-.1361	-.2428
.685	-.3124	-.5518	-.6722	-.6625	-.7095
.775	-.3451	-.5530	-.6464	-.6839	-.7234
.900		-.3365	-.5762	-.6278	-.7203

ALPHAO(10) = 7.910 BETAO (10) = 8.160

SECTION (1)RIGHT VERTICAL DEPENDENT VARIABLE CP

Z/BV	.1580	.3160	.6000	.8400	.9250
X/CV					
.000	.4634	.2137	.1217	.0839	.0340
.050	.2714	.3151	.2845	.2989	.2743
.150	.1585	.2174	.2845	.2940	.1532
.300	.0507	.1158	.1273	.1120	.0467
.520	.0598	-.0237	-.0459	.0930	-.2213
.685	-.5379	-.6219	-.6467	-.6217	-.6741
.775	-.3444	-.5514	-.6188	-.6313	-.6679
.900		-.3322	-.4755	-.5651	-.6476

ALPHAO(10) = 8.060 BETAO (11) = 10.140

SECTION (1)RIGHT VERTICAL DEPENDENT VARIABLE CP

Z/BV	.1580	.3160	.6000	.8400	.9250
X/CV					
.000	.3011	.1214	-.0074	-.1953	-.1099
.050	.1378	.4047	.3643	.3631	.3238
.150	.0714	.2953	.2858	.2805	.2160
.300	.0174	.1733	.2028	.1753	.0825
.520	-.0795	.0288	.0153	-.0643	-.2112
.685	-.5554	-.5808	-.6013	-.6088	-.6581
.775	-.3257	-.4680	-.4848	-.5844	-.6148
.900		-.2885	-.4[illegible]	-.5066	-.5914

ARC11-716 IA14 O1+112+S12N25+AT10 RIGHT VERTICAL (RB1R32)

ALPHA(11) = 10.040 BETA(1) = -9.950

SECTION (1)RIGHT VERTICAL DEPENDENT VARIABLE CP

X/CV \ Z/BV	.1580	.3160	.6000	.8400	.9250
.005	.3245	.1759	.0041	-.0802	-.1689
.050	-.0862	-.7047	-.8425	-.8597	-.8354
.150	-.1675	-.7197	-.8537	-.8941	-.8277
.500	-.3597	-.5821	-.8206	-.8980	-.7979
.520	-.3164	-.5613	-.7813	-.7575	-.7646
.685	-.4379	-.4922	-.7382	-.6966	-.7113
.775	-.3724	-.4478	-.7382	-.7155	-.6989
.900		-.3647	-.5207	-.7323	-.7524

ALPHA(11) = 9.930 BETA(2) = -7.950

SECTION (1)RIGHT VERTICAL DEPENDENT VARIABLE CP

X/CV \ Z/BV	.1580	.3160	.6000	.8400	.9250
.005	.5168	.2038	.0970	.0474	-.0599
.050	-.2421	-.5114	-.7752	-.8160	-.8992
.150	-.1293	-.6036	-.7816	-.8441	-.8601
.500	-.3066	-.3772	-.7190	-.7997	-.7[illegible]
.520	-.4641	-.4598	-.6691	-.7326	-.6760
.685	-.4275	-.4023	-.7269	-.6175	-.6097
.775	-.3467	-.5270	-.6430	-.6293	-.5897
.900		-.3383	-.5137	-.6424	-.5931

ALPHA(11) = 9.960 BETA(3) = -5.920

SECTION (1)RIGHT VERTICAL DEPENDENT VARIABLE CP

X/CV \ Z/BV	.1580	.3160	.6000	.8400	.9250
.005	.5115	.2449	.1842	.1483	.0836
.050	-.2936	-.5413	-.7307	-.8114	-.9783
.150	-.0892	-.4518	-.6920	-.7759	-.8420
.500	-.2401	-.3628	-.5711	-.6463	.6734
.520	-.4243	-.4209	-.4677	-.6078	-.5522
.685	-.4258	-.4929	-.4206	-.6581	-.6234
.775	-.3256	-.5538	-.5698	-.5683	-.5226
.900		-.3585	-.4150	-.5449	-.4761

ARC11-716 IA14 O1+T12+S12N25+AT10 RIGHT VERTICAL (RB1R32)

ALPHAO(11) = 0.000 BETAO (4) = -3.970

SECTION (1)RIGHT VERTICAL DEPENDENT VARIABLE CP

Z/BV	.1590	.3160	.6000	.8400	.9250
X/CV					
.000	.3030	.2829	.2494	.2051	.1675
.050	-.1837	-.4796	-.6628	-.7624	-.7604
.150	-.0[illegible]	-.2480	-.5068	-.6295	-.7224
.300	-.2376	-.3249	-.3500	-.4513	-.4637
.525	-.3655	-.3747	.3864	-.4314	-.3331
.685	-.4433	-.5274	-.8051	-.7078	-.7326
.775	-.5136	-.4[illegible]	-.6056	-.7262	-.7372
.900		-.4[illegible]	-.4319	-.4632	-.4542

ALPHAO(11) = 9.950 BETAO (5) = -1.970

SECTION (1)RIGHT VERTICAL DEPENDENT VARIABLE CP

Z/BV	.1590	.3160	.6000	.8400	.9250
X/CV					
.000	.5392	.3347	.2942	.2479	.2445
.050	-.0159	.5638	-.5[illegible]54	-.5604	-.5722
.150	.0220	-.1674	-.2474	-.3234	-.3481
.300	-.2037	-.2674	-.2681	-.2371	-.2291
.525	-.3106	-.3[illegible]96	.3516	-.3166	-.3007
.685	-.4497	-.5[illegible]23	.7786	.7073	-.7344
.775	-.5205	-.4[illegible]	-.7646	-.7497	-.7610
.900		-.4[illegible]	-.4224	-.4988	-.5019

ALPHAO(11) = 9.950 BETAO (6) = .030

SECTION (1)RIGHT VERTICAL DEPENDENT VARIABLE CP

Z/BV	.1590	.3160	.6000	.8400	.9250
X/CV					
.000	.5104	.3421	.2932	.2514	.2743
.050	.0077	-.2156	-.3120	-.2598	-.2760
.150	.0021	-.1141	-.1505	-.1255	-.1058
.300	-.1739	-.2107	-.1670	-.1433	-.1677
.525	.2450	-.2429	-.2771	-.2415	-.2724
.685	-.4191	-.6654	-.7565	-.6979	-.7423
.775	-.5364	-.4408	-.7489	-.7322	-.7673
.900		-.4452	-.4283	-.7049	-.6977

ARC11-716 IA14 OL+T12+S12N25+AT10 RIGHT VERTICAL (RB1R32)

ORIGINAL PAGE IS OF POOR QUALITY

ALPHA(11) = 9.950 BETA0 (T/ = 2.061

SECTION 11 RIGHT VERTICAL DEPENDENT VARIABLE CP

Z/BV	.1580	.3160	.6000	.8400	.9250
X/CV					
.000	.5544	.3441	.2796	.2021	.2332
.050	.1482	.0407	-.0458	.0119	.0015
.150	.0267	-.0458	-.0405	.0229	.0140
.300	-.1227	-.1226	-.0242	-.0112	.0105
.525	-.1517	-.1870	-.2246	-.2551	-.2647
.675	-.1[illegible]	-.7001	-.7331	-.6972	-.7[illegible]
.775	-.5527	-.4720	.7156	-.7171	-.7504
.900		.3927	-.5916	-.6977	-.7[illegible]

ALPHA(11) = 9.960 BETA0 (T/ = 4.040

SECTION 11 RIGHT VERTICAL DEPENDENT VARIABLE CP

Z/BV	.1580	.3160	.6000	.8400	.9250
X/CV					
.000	.5127	.3117	.2245	.1272	.1178
.050	.1090	.0447	.0914	.1258	.1140
.150	.0428	.0515	.0585	.0614	.0476
.300	-.0427	-.0529	-.0531	-.0314	-.0255
.525	-.1067	-.1178	-.1497	-.1552	-.2455
.675	-.5154	.6042	-.7086	-.6608	-.7121
.775	-.5527	-.5540	-.6477	-.6963	-.7504
.900		.3444	-.5931	-.6[illegible]	-.7[illegible]

ALPHA(11) = 10.04[illegible] BETA0 (T/ = 6.14[illegible]

SECTION 11 RIGHT VERTICAL DEPENDENT VARIABLE CP

Z/BV	.158	.3160	.6000	.8400	.9250
X/CV					
.000	.5121	.2717	.1678	.0488	.0921
.050	.2019	.1940	.1914	.2316	.2202
.150	.0724	.1109	.1217	.1642	.1[illegible]
.300	-.0509	.0389	.0470	.0845	.0105
.520	-.0912	-.0685	-.0955	-.1198	-.2425
.675	-.5641	-.6443	-.6499	-.6356	-.6973
.775	-.5769	-.6267	-.6087	-.6474	-.7014
.900		-.3168	-.5128	-.5885	-.6886

ARC11-716 IA14 C1+T12+S12N25+AT10 RIGHT VERTICAL (RB1R32)

ALPHAO(11) = 10.050 BETAO (10) = 8.160

SECTION (1)RIGHT VERTICAL DEPENDENT VARIABLE CP

Z/BV	.1590	.3160	.6000	.8400	.9250
X/CV					
.005	.4451	.2271	.0934	-.0757	-.0279
.050	.0945	.5011	.2739	.2847	.2711
.150	.1262	.1971	.1913	.2070	.1703
.300	-.0452	.1117	.1024	.1170	.0425
.525	-.1126	-.0512	-.0395	-.1020	-.2316
.675	-.6[illegible]2	.5197	.6303	-.6210	-.6797
.775	-.3[illegible]	[illegible]	-.5565	-.6351	-.6659
.900		.2354	.4697	-.5659	-.6419

ALPHA(11) = [illegible] (11) = 10.250

SECTION [illegible] VERTICAL DEPENDENT VARIABLE CP

Z/BV	[illegible]	.3160	.6000	.8400	.9250
X/CV					
[illegible]	-.0575	.1314	-.1[illegible]	.2148	-.1418
[illegible]	-.2[illegible]	.3935	[illegible]	.3652	.3163
[illegible]	-.1[illegible]	.2[illegible]	[illegible]	.2911	.2213
[illegible]	.1[illegible]	.1537	[illegible]	.1756	.0832
[illegible]	.1[illegible]	.1353	-.1[illegible]	-.0560	-.2035
[illegible]	[illegible]	-.5779	-.5742	-.5922	-.6465
[illegible]	[illegible]	[illegible]	-.4707	-.5663	-.5973
[illegible]		-.2454	-.3794	-.4957	-.5778

ARC11-716 IA14 OL+T12+S12N25+AT10 RIGHT VERTICAL (RB1R33) (17 APR 74)

REFERENCE DATA

SREF = 2.4210 SQ FT. XMRP = 29.5800 INCHES
LREF = 38.7050 INCHES YMRP = .0000 INCHES
BREF = 58.7050 INCHES ZMRP = .0000 INCHES
SCALE = .0500 SCALE

PARAMETRIC DATA

MACH = 1.250 ELEVON = .000
RUDDER = .000 SPOILER = .000

ALPHA(1) = -10.340 BETA(1) = -8.910

SECTION (1)RIGHT VERTICAL DEPENDENT VARIABLE CP

Z/BV	.1580	.3160	.6000	.8400	.9250
X/CV					
.000	.5242	.3908	.4517	.5196	.4451
.050	.2530	-.3764	-.5264	-.5979	-.6744
.150	-.4882	-.4104	-.5235	-.6294	-.6917
.300	.0185	-.4170	-.5170	-.5568	-.5303
.500	-.1966	-.3694	-.5322	-.4992	-.5320
.650	-.4514	-.5727	-.6947	-.4476	-.5884
.775	-.5258	-.5549	-.6065	-.4135	.4576
.900		-.4649	-.4495	-.5861	-.5550

ALPHA(1) = -10.260 BETA(2) = -7.920

SECTION (1)RIGHT VERTICAL DEPENDENT VARIABLE CP

Z/BV	.1580	.3160	.6000	.8400	.9250
X/CV					
.000	.6151	.4995	.5451	.6028	.5277
.050	-.1719	.2902	-.4354	-.6224	-.7075
.150	-.2811	.3077	-.4782	-.5850	-.6619
.300	.0917	-.2825	-.4275	-.4498	-.5257
.520	.0772	.2215	-.4046	-.4130	-.3730
.649	-.4698	-.5404	-.6475	-.6278	-.6234
.775	.5216	-.5054	-.6114	-.6135	-.6420
.900		-.4176	-.5211	-.4581	-.5841

ALPHA(1) = -10.250 BETA(3) = -5.920

SECTION (1)RIGHT VERTICAL DEPENDENT VARIABLE CP

Z/BV	.1580	.3160	.6000	.8400	.9250
X/CV					
.000	.6765	.5033	.6362	.6875	.6259
.050	-.0065	-.2119	-.4010	-.6235	-.6627
.150	-.0074	-.2140	-.5469	-.5608	-.5562
.300	.0645	-.1996	-.2548	-.4410	-.4255
.520	-.0544	-.1072	-.2587	-.2456	-.3036
.649	-.4564	-.5206	-.5411	-.5445	-.5815

ARC11-716 IA14 O1+T12+S12N25+AT10 RIGHT VERTICAL (RB1R33)

ALPHAO(1) = -10.250 BETAO (3) = -5.920

SECTION (1)RIGHT VERTICAL DEPENDENT VARIABLE CP

Z/BV	.1580	.3160	.6000	.8400	.9250
X/CV					
.775	-.3001	-.4862	-.5283	-.5627	-.5841
.900		-.3891	-.5011	-.5544	-.5403

ALPHAO(1) = -10.240 BETAO (4) = -5.960

SECTION (1)RIGHT VERTICAL DEPENDENT VARIABLE CP

Z/BV	.1580	.3160	.6000	.8400	.9250
X/CV					
.000	.7390	.6473	.7063	.7373	.6931
.050	-.0085	-.1905	-.5015	-.5556	-.5951
.150	.1297	-.0049	-.2087	-.4562	-.4547
.300	.0845	.0021	-.0857	-.3111	-.3099
.520	-.0219	-.0394	-.1053	-.0672	-.0118
.685	-.4390	-.5265	-.5005	-.4715	-.4869
.775	-.2993	-.5169	-.5111	-.4774	-.4757
.900		-.3806	-.4829	-.4855	-.4344

ALPHAO(1) = -10.250 BETAO (5) = -1.970

SECTION (1)RIGHT VERTICAL DEPENDENT VARIABLE CP

Z/BV	.1580	.3160	.6000	.8400	.9250
X/CV					
.000	.7772	.6982	.7442	.7683	.7534
.050	.1123	-.1002	-.2926	-.3967	-.3785
.150	.2634	.1519	.0451	-.0177	-.1680
.300	.1285	.0665	.0852	.0886	.1171
.520	.0366	.0112	-.0134	.0029	.0270
.685	-.4114	-.5116	-.4874	-.4505	-.4584
.775	-.2854	-.5059	-.4869	-.4598	-.4652
.900		-.3677	-.4697	-.4785	-.4398

ARC11-716 IA14 OI+T12+S12N25+AT10 RIGHT VERTICAL (RB1R33)

ALPHAO(1) = -10.160 BETAO (6) = .020

SECTION (1)RIGHT VERTICAL DEPENDENT VARIABLE CP

Z/BV	.1580	.3160	.6000	.8400	.9250
X/CV					
.000	.7873	.7182	.7534	.7560	.7728
.050	.3228	.0929	.0064	.0015	.0041
.150	.3218	.2309	.2131	.2214	.2442
.300	.1828	.1537	.1778	.1785	.1713
.520	.0942	.0670	.0367	.0407	.0453
.685	-.4009	-.4984	-.4877	-.4601	-.4528
.775	-.2900	-.4977	-.4679	-.4622	-.4551
.900		-.3699	-.4575	-.4816	-.4415

ALPHAO(1) = -10.160 BETAO (7) = 2.040

SECTION (1)RIGHT VERTICAL DEPENDENT VARIABLE CP

Z/BV	.1580	.3160	.6000	.8400	.9250
X/CV					
.000	.7743	.7070	.7350	.7048	.7352
.050	.4680	.3395	.3226	.3655	.3436
.150	.3790	.3246	.3131	.3340	.3366
.300	.2576	.2320	.2555	.2586	.2226
.520	.1534	.1193	.0963	.1060	.0625
.685	-.3823	-.4716	-.4664	-.4469	-.4464
.775	-.2092	-.4593	-.4367	-.4327	-.4506
.900		-.3375	-.4101	-.4510	-.4543

ALPHAO(1) = -10.220 BETAO (8) = 4.080

SECTION (1)RIGHT VERTICAL DEPENDENT VARIABLE CP

Z/BV	.1580	.3160	.6000	.8400	.9250
X/CV					
.000	.7275	.6615	.6831	.6309	.6743
.050	.5671	.4847	.4732	.4992	.4667
.150	.4487	.4100	.4196	.4295	.4049
.300	.3342	.3333	.3390	.3318	.2807
.520	.2251	.1841	.1705	.1372	.0703
.685	-.3452	-.4368	-.4327	-.4376	-.4423
.775	-.2814	-.4233	-.4025	-.4141	-.4520
.900		-.3017	-.3636	-.4229	-.4723

ARC11-716 IA14 OI+T12+S12M25+AT10 RIGHT VERTICAL (RB1R33)

ALPHAO(1) = -10.230 BETAO (9) = 6.080

SECTION (1)RIGHT VERTICAL DEPENDENT VARIABLE CP

Z/BV	.1580	.3160	.6000	.8400	.9250
X/CV					
.000	.6749	.5974	.6202	.5619	.6162
.050	.6632	.6095	.5856	.5910	.5515
.150	.5365	.5124	.5017	.5016	.4658
.300	.4319	.4155	.3974	.3896	.3264
.520	.2942	.2353	.2213	.1665	.0776
.685	-.3163	-.4046	-.4127	-.4347	-.4346
.775	-.2705	-.3817	-.3734	-.3946	-.4307
.900		-.2533	-.3216	-.3879	-.4430

ALPHAO(1) = -10.230 BETAO (10) = 8.120

SECTION (1)RIGHT VERTICAL DEPENDENT VARIABLE CP

Z/BV	.1580	.3160	.6000	.8400	.9250
X/CV					
.000	.6260	.5109	.5238	.4543	.5241
.050	.7394	.7035	.6653	.6587	.6136
.150	.6115	.5925	.5632	.5565	.5134
.300	.5065	.4774	.4480	.4328	.3606
.520	.3440	.2709	.2635	.1913	.0868
.685	-.2875	-.3700	-.3947	-.4263	-.4228
.775	-.2643	-.3367	-.3450	-.3669	-.4098
.900		-.2059	-.2757	-.3501	-.4035

ALPHAO(1) = -10.240 BETAO (11) = 10.110

SECTION (1)RIGHT VERTICAL DEPENDENT VARIABLE CP

Z/BV	.1580	.3160	.6000	.8400	.9250
X/CV					
.000	.5319	.3688	.3939	.3321	.4312
.050	.8221	.7843	.7333	.7224	.6729
.150	.6923	.6635	.6245	.6166	.5663
.300	.5769	.5365	.5043	.4838	.4078
.520	.3927	.2995	.2985	.2227	.1110
.685	-.2542	-.3327	-.3651	-.3935	-.3955
.775	-.2470	-.2732	-.3035	-.3251	-.3686
.900		-.1548	-.2184	-.2952	-.3503

ARC11-716 IA14 O1+T12+S12N25+AT10 RIGHT VERTICAL (RB1R33)

ALPHAO(2) = -8.220 BETAO (1) = -9.940

SECTION (1)RIGHT VERTICAL DEPENDENT VARIABLE CP

Z/BV	.1580	.3160	.6000	.8400	.9250
X/CV					
.000	.4975	.3575	.3821	.4570	.3751
.050	-.2740	-.3868	-.5474	-.6064	-.6731
.150	-.5011	-.4272	-.5477	-.6238	-.7028
.300	-.0085	-.4379	-.5433	-.3689	-.5238
.520	-.1375	-.3980	-.5534	-.5021	-.4053
.685	-.4669	-.5896	-.7033	-.4400	-.5714
.775	-.3495	-.5711	-.6079	-.4260	-.4351
.900		-.4723	-.4637	-.4009	-.3623

ALPHAO(2) = -8.240 BETAO (2) = -7.960

SECTION (1)RIGHT VERTICAL DEPENDENT VARIABLE CP

Z/BV	.1580	.3160	.6000	.8400	.9250
X/CV					
.000	.5908	.4694	.5018	.5538	.4790
.050	-.2005	-.3089	-.5169	-.6527	-.7232
.150	-.3064	-.3276	-.4979	-.6013	-.6791
.300	.0545	-.3007	-.4428	-.4721	-.5421
.520	-.1073	-.2417	-.4412	-.4376	-.3894
.685	-.4480	-.5571	-.6592	-.6389	-.6384
.775	-.3267	-.4915	-.6247	-.5852	-.6551
.900		-.4255	-.5133	-.4366	-.5934

ALPHAO(2) = -8 240 BETAO (3) = -5.960

SECTION (1)RIGHT VERTICAL DEPENDENT VARIABLE CP

Z/BV	.1580	.3160	.6000	.8400	.9250
X/CV					
.000	.6513	.5516	.6002	.6414	.5823
.050	-.1138	-.2279	-.4981	-.6522	-.6741
.150	-.0919	-.2305	-.3542	-.5747	-.5 14
.300	.0475	-.1644	-.2651	-.4525	-.4447
.520	-.0612	-.1267	-.2614	-.2573	-.3198
.685	-.4336	-.5398	-.5557	-.5538	-.5808
.775	-.3039	-.4699	-.5401	-.5623	-.5829
.900		-.3842	-.5115	-.5649	-.5461

ARC11-716 IA14 O1+T12+S12N25+AT10 RIGHT VERTICAL (RB1R33)

ALPHAO(2) = -8.250 BETAO (4) = -3.980

SECTION (1)RIGHT VERTICAL DEPENDENT VARIABLE CP

Z/BV	.1580	.3160	.6000	.8400	.9250
X/CV					
.000	.7103	.6087	.6636	.6937	.6492
.050	-.0302	-.2174	-.5059	-.5688	-.6065
.150	.1070	-.1022	-.2175	-.4708	-.4701
.300	.0582	-.0198	-.1011	-.3122	-.3287
.520	-.0534	-.0719	-.1219	-.0890	-.0253
.685	-.4108	-.5418	-.5105	-.4780	-.4863
.775	-.2922	-.4874	-.5251	-.4817	-.4717
.900		-.3727	-.4962	-.4918	-.4455

ALPHAO(2) = -8.250 BETAO (5) = -1.990

SECTION (1)RIGHT VERTICAL DEPENDENT VARIABLE CP

Z/BV	.1580	.3160	.6000	.8400	.9250
X/CV					
.000	.7465	.6622	.6986	.7201	.7123
.050	.0791	-.1221	-.3066	-.4110	-.3901
.150	.2377	.1251	.0251	-.0353	-.1760
.300	.1030	.0408	.0581	.0721	.0942
.520	.0059	-.0159	-.0378	-.0182	.0196
.685	-.3885	-.5208	-.4984	-.4573	-.4671
.775	-.2765	-.4927	-.4956	-.4674	-.4742
.900		-.3535	-.4741	-.4860	-.4554

ALPHAO(2) = -8.250 BETAO (6) = .010

SECTION (1)RIGHT VERTICAL DEPENDENT VARIABLE CP

Z/BV	.1580	.3160	.6000	.8400	.9250
X/CV					
.000	.7556	.6848	.7102	.7111	.7288
.050	.2899	.0754	-.0178	-.0113	-.0123
.150	.2950	.1999	.1807	.1989	.2255
.300	.1547	.1255	.1489	.1575	.1477
.520	.0833	.0417	.0143	.0241	.0181
.685	-.3846	-.5075	-.4971	-.4603	-.4667
.775	-.2716	-.5067	-.4811	-.4642	-.4724
.900		-.3585	-.4557	-.4834	-.4625

ARC11-716 IA14 O1+T12+S12N25+AT10 RIGHT VERTICAL (RB1R33)

ALPHAO(2) = -8.230 BETAO (7) = 2.020

SECTION (1)RIGHT VERTICAL DEPENDENT VARIABLE CP

Z/BV	.1580	.3160	.6000	.8400	.9250
X/CV					
.000	.7490	.6776	.6962	.6842	.6966
.050	.4434	.3137	.2922	.3382	.3257
.150	.3332	.2972	.2838	.3085	.3119
.300	.2244	.2079	.2290	.2387	.1979
.520	.1288	.0980	.0735	.0873	.0445
.685	-.3795	-.4820	-.4754	-.4525	-.4577
.775	-.2790	-.4729	-.4482	-.4424	-.4661
.900		-.3344	-.4158	-.4585	-.4739

ALPHAO(2) = -8.230 BETAO (8) = 4.040

SECTION (1)RIGHT VERTICAL DEPENDENT VARIABLE CP

Z/BV	.1580	.3160	.6000	.8400	.9250
X/CV					
.000	.7049	.6334	.6483	.5935	.6389
.050	.5401	.4512	.4380	.4667	.4410
.150	.4187	.3771	.3873	.4014	.3851
.300	.2965	.2946	.3092	.3103	.2008
.520	.1949	.1648	.1509	.1223	.0553
.685	-.3544	-.4445	-.4381	-.4383	-.4478
.775	-.2747	-.4353	-.4102	-.4204	-.4604
.900		-.2991	-.3708	-.4277	-.4842

ALPHAO(2) = -8.220 BETAO (9) = 6.050

SECTION (1)RIGHT VERTICAL DEPENDENT VARIABLE CP

Z/BV	.1580	.3160	.6000	.8400	.9250
X/CV					
.000	.6479	.5655	.5860	.5226	.5820
.050	.6289	.5691	.5519	.5592	.5273
.150	.4982	.4750	.4717	.4759	.4487
.300	.3903	.3829	.3715	.3689	.3050
.520	.2667	.2146	.2006	.1532	.0634
.685	-.3289	-.4109	-.4177	-.4333	-.4588
.775	-.2737	-.3951	-.3802	-.4003	-.4375
.900		-.2612	-.3269	-.3922	-.4474

ARC11-716 IA14 OL+T12+S12N25+AT10 RIGHT VERTICAL (RB1R33)

ALPHAO(2) = -8.220 BETAO (10) = 8.100

SECTION (1)RIGHT VERTICAL DEPENDENT VARIABLE CP

Z/BV	.1580	.3160	.6000	.8400	.9250
X/CV					
.000	.5932	.4794	.4911	.4218	.4830
.050	.7076	.6644	.6331	.6283	.5914
.150	.5767	.5551	.5355	.5310	.4896
.300	.4697	.4514	.4199	.4116	.3415
.520	.3228	.2514	.2408	.1755	.0731
.685	-.2966	-.3793	-.4010	-.4265	-.4289
.775	-.2677	-.3507	-.3523	-.3738	-.4169
.900		-.2182	-.2872	-.3555	-.4135

ALPHAO(2) = -8.220 BETAO (11) = 10.130

SECTION (1)RIGHT VERTICAL DEPENDENT VARIABLE CP

Z/BV	.1580	.3160	.6000	.8400	.9250
X/CV					
.000	.5112	.3501	.3559	.2739	.3730
.050	.7978	.7534	.6982	.6841	.6379
.150	.6614	.6344	.5920	.5817	.5335
.300	.5458	.5143	.4752	.4554	.3756
.520	.3765	.2854	.2728	.2005	.0869
.685	-.2658	-.3433	-.3658	-.4004	-.4118
.775	-.2515	-.2927	-.3119	-.3415	-.3869
.900		-.1739	-.2325	-.3103	-.3791

ALPHAO(3) = -6.280 BETAO (1) = -9.970

SECTION (1)RIGHT VERTICAL DEPENDENT VARIABLE CP

Z/BV	.1580	.3160	.6000	.8400	.9250
X/CV					
.000	.4909	.3327	.3480	.4023	.3228
.050	-.2924	-.3887	-.5543	-.6136	-.6788
.150	-.5006	-.4239	-.5579	-.6276	-.7178
.300	-.0082	-.4411	-.5506	-.5846	-.5553
.520	-.1541	-.3991	-.5603	-.5394	-.4428
.685	-.4500	-.5092	-.7035	-.4745	-.5488
.775	-.5546	-.5626	-.6294	-.4486	-.4383
.900		-.4747	-.4815	-.4539	-.3864

ARC11-716 IA14 OL+T12+S12N25+AT10 RIGHT VERTICAL (RB1R33)

ALPHAO(5) = -6.280 BETAO (2) = -7.990

SECTION (1)RIGHT VERTICAL DEPENDENT VARIABLE CP

Z/BV	.1580	.3160	.6000	.8400	.9250
X/CV					
.000	.5716	.4482	.4740	.5136	.4406
.050	-.2086	-.3205	-.5244	-.6512	-.7254
.150	-.3158	-.3375	-.5037	-.6096	-.6827
.300	.0362	-.3026	-.4472	-.4766	-.5452
.520	-.1302	-.2492	-.4383	-.4437	-.3866
.685	-.4671	-.5619	-.6553	-.6320	-.6404
.775	-.3398	-.4935	-.6237	-.5927	-.6567
.900		-.4268	-.5018	-.4481	-.5935

ALPHAO(3) = -6.300 BETAO (3) = -6.000

SECTION (1)RIGHT VERTICAL DEPENDENT VARIABLE CP

Z/BV	.1580	.3160	.6000	.8400	.9250
X/CV					
.000	.6329	.5232	.5684	.5398	.5479
.050	-.1329	-.2453	-.4978	-.6292	-.6757
.150	-.1128	-.2382	-.3635	-.5767	-.5749
.300	.0299	-.1666	-.2792	-.4507	-.4480
.520	-.0811	-.1373	.2630	-.2605	-.3090
.685	-.4377	-.5450	-.5612	-.5473	-.5735
.775	-.3154	-.4787	-.5403	-.5606	-.5767
.900		-.3873	-.5141	-.5650	-.5410

ALPHAO(3) = -6.260 BETAO (4) = -3.980

SECTION (1)RIGHT VERTICAL DEPENDENT VARIABLE CP

Z/BV	.1580	.3160	.6000	.8400	.9250
X/CV					
.000	.6873	.5809	.6252	.6465	.6124
.050	-.0512	-.2356	-.5010	-.5714	-.6097
.150	.0919	-.1016	-.2208	-.4769	-.4777
.300	.0428	-.0376	-.1123	-.2708	-.3371
.520	-.0742	-.0883	-.1371	-.1006	-.0195
.685	-.3900	-.5481	-.5203	-.4837	-.4824
.775	-.2788	-.4610	-.5324	-.4850	-.4761
.900		-.3645	-.5017	-.4973	-.4567

ARC11-716 IA14 O1+T12+S12N25+AT10 RIGHT VERTICAL (RB1R33)

ALPHAO(3) = -6.180 BETAO (5) = .030

SECTION (1)RIGHT VERTICAL DEPENDENT VARIABLE CP

Z/BV	.1580	.3160	.6000	.8400	.9250
X/CV					
.000	.7324	.6493	.6872	.6645	.6851
.050	.2581	.0573	-.0348	-.0306	-.0213
.150	.2710	.1753	.1516	.1756	.2124
.300	.1329	.0967	.1182	.1419	.1266
.520	.0359	.0249	-.0043	.0085	.0187
.685	-.3695	-.5073	-.4961	-.4601	-.4695
.775	-.2681	-.5011	-.4823	-.4677	-.4773
.900		-.3422	-.4516	-.48[illegible]	-.4739

ALPHAO(3) = -6.320 BETAO (6) = 2.000

SECTION (1)RIGHT VERTICAL DEPENDENT VARIABLE CP

Z/BV	.1580	.3160	.6000	.8400	.9250
X/CV					
.000	.7202	.6442	.6556	.6214	.6569
.050	.4135	.2703	.2517	.3018	.2901
.150	.3236	.2662	.2527	.2749	.2859
.300	.1876	.1676	.1977	.2120	.1695
.520	.0968	.0752	.0446	.0682	.0219
.685	-.3876	-.4855	-.4797	-.4573	-.4661
.775	-.2808	-.4863	-.4562	-.4529	-.4771
.900		-.3374	-.4212	-.4651	-.4889

ALPHAO(3) = -6.330 BETAO (7) = 4.070

SECTION (1)RIGHT VERTICAL DEPENDENT VARIABLE CP

Z/BV	.1580	.3160	.6000	.8400	.9250
X/CV					
.000	.6752	.6027	.6082	.5528	.5954
.050	.5033	.4108	.3946	.4289	.4064
.150	.3873	.3359	.3479	.3644	.3542
.300	.2621	.2618	.2758	.2831	.2322
.520	.1639	.1393	.1225	.1002	.0364
.685	-.3798	-.4510	-.4523	-.4464	-.4602
.775	-.2810	-.4528	-.4272	-.4360	-.4757
.900		-.3005	-.3800	-.4412	-.4993

ARC11-716 IA14 OL+T12+S12M25+AT10 RIGHT VERTICAL (RB1R33)

ALPHAO(3) = -8.380 BETAO (8) = 6.050

SECTION (1)RIGHT VERTICAL DEPENDENT VARIABLE CP

Z/BV	.1580	.3160	.6000	.8400	.9250
X/CV					
.000	.6294	.5488	.5566	.4887	.5406
.050	.5941	.5266	.5126	.5189	.4861
.150	.4631	.4361	.4366	.4392	.4097
.300	.3531	.3497	.3371	.3363	.2735
.520	.2375	.1934	.1722	.1269	.0406
.685	-.3521	-.4255	-.4366	-.4463	-.4557
.775	-.2737	-.4161	-.3991	-.4190	-.4583
.900		-.2705	-.3406	-.4094	-.4665

ALPHAO(3) = -6.270 BETAO (9) = 8.100

SECTION (1)RIGHT VERTICAL DEPENDENT VARIABLE CP

Z/BV	.1580	.3160	.6000	.8400	.9250
X/CV					
.000	.5819	.4638	.4624	.3730	.4401
.050	.6717	.6251	.5954	.5897	.5540
.150	.5354	.5196	.4985	.4947	.4662
.300	.4345	.4167	.3958	.3799	.3093
.520	.2941	.2299	.2165	.1429	.0477
.685	-.3209	-.3939	-.4137	-.4543	-.4466
.775	-.2693	-.3758	-.3704	-.4084	-.4371
.900		-.2359	-.3197	-.3885	-.4369

ALPHAO(3) = -6.260 BETAO (10) = 10.090

SECTION (1)RIGHT VERTICAL DEPENDENT VARIABLE CP

Z/BV	.1580	.3160	.6000	.8400	.9250
X/CV					
.000	.4934	.3319	.3268	.2344	.3295
.050	.7549	.7162	.6609	.6489	.6053
.150	.6242	.5986	.5591	.5510	.5132
.300	.5130	.4832	.4423	.4279	.3471
.520	.3900	.2670	.2471	.1803	.0667
.685	-.2813	-.3576	-.3720	-.4069	-.4258
.775	-.2377	-.3179	-.3284	-.3559	-.4040
.900		-.1931	-.2441	-.3222	-.3953

ARC11-716 IA14 OL+T12+S12M25+AT10 RIGHT VERTICAL (RB1R33)

ALPHAO(4) = -4.200 BETAO (1) = -8.980

SECTION (1)RIGHT VERTICAL DEPENDENT VARIABLE CP

Z/BV	.1580	.3160	.6000	.8400	.9250
X/CV					
.000	.4821	.3165	.3251	.3636	.2755
.050	-.3097	-.3927	-.5603	-.6336	-.6896
.150	-.5043	-.4308	-.5656	-.6459	-.7270
.300	-.0116	-.4316	-.5508	-.6090	-.5720
.520	-.1838	-.3987	-.5571	-.5671	-.4662
.685	-.4375	-.5845	-.6997	-.4919	-.5159
.775	-.3531	-.5484	-.6195	-.4751	-.4424
.900		-.4619	-.4908	-.4660	-.4037

ALPHAO(4) = -4.230 BETAO (2) = -7.990

SECTION (1)RIGHT VERTICAL DEPENDENT VARIABLE CP

Z/BV	.1580	.3160	.6000	.8400	.9250
X/CV					
.000	.5516	.4215	.4475	.4666	.3949
.050	-.2321	-.3280	-.5318	-.6594	-.7307
.150	-.3264	-.3442	-.5100	-.6263	-.6822
.300	.0245	-.3036	-.4488	-.4837	-.5543
.520	-.1543	-.2640	-.4353	-.4533	-.5936
.685	-.4566	-.5600	-.6517	-.6332	-.6460
.775	-.3474	-.4733	-.6217	-.5970	-.6598
.900		-.4297	-.4889	-.4543	-.5713

ALPHAO(4) = -4.180 BETAO (3) = -5.970

SECTION (1)RIGHT VERTICAL DEPENDENT VARIABLE CP

Z/BV	.1580	.3160	.6000	.8400	.9250
X/CV					
.000	.0145	.9022	.5569	.5529	.5037
.050	-.1302	-.2736	-.4958	-.6383	-.6842
.150	-.0967	-.2460	-.3694	-.5929	-.5881
.300	.0116	-.1615	-.2870	-.4529	-.4588
.520	-.1089	-.1480	-.2661	-.2635	-.2918
.685	-.4295	-.5509	-.5723	-.5527	-.5721
.775	-.9091	-.4585	-.5498	-.5688	-.5561
.900		-.3724	-.5282	-.5752	-.5318

ARC11-716 IA14 OL+T12+S12MBS+AT10 RIGHT VERTICAL (RB1R33)

ALPHAO(4) = -4.170 BETAO (4) = -3.950

SECTION (1)RIGHT VERTICAL DEPENDENT VARIABLE CP

Z/BV	.1580	.3160	.6000	.8400	.9250
X/CV					
.000	.6549	.5496	.5841	.5965	.5678
.050	-.0794	-.2555	-.4945	-.5781	-.6163
.150	.0747	-.1082	-.2407	-.4836	-.4928
.300	.0197	-.0571	-.1236	-.2147	-.3357
.520	-.1001	-.1100	-.1487	-.1134	-.0335
.685	-.5751	-.5557	-.5557	-.4870	-.4854
.775	-.2795	-.4373	-.5399	-.4928	-.4841
.900		-.3579	-.5017	-.5076	-.4785

ALPHAO(4) = -4.190 BETAO (5) = -2.020

SECTION (1)RIGHT VERTICAL DEPENDENT VARIABLE CP

Z/BV	.1580	.3160	.6000	.8400	.9250
X/CV					
.000	.6869	.5976	.6201	.6212	.6204
.050	.0276	-.1542	-.3158	-.4025	-.4035
.150	.1935	.0801	-.0065	-.0854	-.1533
.300	.0609	-.0079	.0083	.0265	.0472
.520	-.0451	-.0562	-.0776	-.0582	-.0331
.685	-.3874	-.5340	-.5103	-.4695	-.4837
.775	-.2697	-.4497	-.5081	-.4848	-.49[illegible]5
.900		-.3414	-.4867	-.5007	-.4985

ALPHAO(4) = -4.080 BETAO (6) = -.010

SECTION (1)RIGHT VERTICAL DEPENDENT VARIABLE CP

Z/BV	.1580	.3160	.6000	.8400	.9250
X/CV					
.000	.7012	.6170	.6205	.6183	.6427
.050	.2257	.0350	-.0519	-.0559	-.0496
.150	.2479	.1531	.1297	.1490	.1974
.300	.1075	.0753	.0833	.1196	.1039
.520	.0122	.0077	-.0242	-.0104	-.0192
.685	-.3702	-.5067	-.4962	-.4611	-.4769
.775	-.2662	-.4488	-.4838	-.4743	-.4887
.900	.	-.3558	-.4548	-.4880	-.4892

DATE 08 JAN 79 TABULATED PRESSURE DATA - IA14A - VOL. 7

AFC11-716 IA14 O4+T12+S12N25+AT10 RIGHT VERTICAL (RB1R53)

ALPHAO(4) = -4.210 BETAO (7) = 2.110

SECTION (1)RIGHT VERTICAL DEPENDENT VARIABLE CP

Z/BV	.1580	.3160	.6000	.8400	.9250
X/CV					
.000	.6859	.6124	.6132	.5715	.6089
.050	.3808	.2412	.2144	.2649	.2638
.150	.2966	.2296	.2220	.2434	.2479
.300	.1603	.1396	.1690	.1869	.1453
.520	.0702	.0608	.0222	.0447	.0006
.685	-.4048	-.4887	-.4837	-.4650	-.4759
.775	-.2712	-.4913	-.4651	-.4658	-.4903
.900		-.3242	-.4307	-.4761	-.5055

ALPHAO(4) = -4.200 BETAO (8) = 4.090

SECTION (1)RIGHT VERTICAL DEPENDENT VARIABLE CP

Z/BV	.1580	.3160	.6000	.8400	.9250
X/CV					
.000	.6422	.5731	.5699	.5065	.5491
.050	.4682	.3723	.3605	.3880	.3675
.150	.3542	.2973	.3132	.3260	.3219
.300	.2301	.2253	.2434	.2495	.2008
.520	.1326	.1146	.0928	.0772	.0134
.685	.4024	-.4588	-.4573	-.4502	-.4673
.775	-.2674	-.4649	-.4350	-.4454	-.4862
.900		-.3053	-.3895	-.4476	-.5062

ALPHAO(4) = -4.210 BETAO (9) = 6.060

SECTION (1)RIGHT VERTICAL DEPENDENT VARIABLE CP

Z/BV	.1580	.3160	.6000	.8400	.9250
X/CV					
.000	.5947	.5256	.5212	.4457	.4986
.050	.5618	.4882	.4743	.4819	.4597
.150	.4294	.4016	.4036	.4086	.3877
.300	.3199	.3195	.3111	.3121	.2523
.520	.2136	.1746	.1523	.1039	.0208
.685	-.3703	-.4276	-.4377	.4416	-.4611
.775	-.2815	-.4192	-.4030	-.4218	-.4656
.900		-.2704	-.3521	-.4153	-.4728

DATE 06 JAN 75 TABULATED PRESSURE DATA - TA14A - VOL. 7

ARC11-716 TA14 OL+T12+S12N25+AT10 RIGHT VERTICAL (RB1R33)

ALPHAO(4) = -4.200 BETAO (10) = 8.080

SECTION (1)RIGHT VERTICAL DEPENDENT VARIABLE CP

X/CV \ Z/BV	.1580	.3160	.6000	.8400	.9250
.000	.5523	.4449	.4361	.3475	.4058
.050	.6308	.5810	.5558	.5543	.5203
.150	.4999	.4763	.4641	.4635	.4300
.300	.3936	.3824	.3580	.3562	.2829
.520	.2661	.2152	.1909	.1345	.0269
.685	-.3386	-.4041	-.4129	-.4296	-.4539
.775	-.2678	-.3851	-.3775	-.3954	-.4491
.900		-.2440	-.3100	-.3735	-.4486

ALPHAO(4) = -4.100 BETAO (11) = 10.090

SECTION (1)RIGHT VERTICAL DEPENDENT VARIABLE CP

X/CV \ Z/BV	.1580	.3160	.6000	.8400	.9250
.000	.4663	.3127	.2953	.1910	.2852
.050	.7132	.6721	.6229	.6106	.5739
.150	.5787	.5594	.5240	.5176	.4776
.300	.4746	.4515	.4078	.4000	.3199
.520	.3255	.2477	.2218	.1607	.0424
.685	-.2962	-.3643	-.3762	-.4082	-.4321
.775	-.2602	-.3343	-.3393	-.3673	-.4138
.900		-.2044	-.2606	-.3301	-.4045

ALPHAO(5) = -2.970 BETAO (1) = -10.040

SECTION (1)RIGHT VERTICAL DEPENDENT VARIABLE CP

X/CV \ Z/BV	.1580	.3160	.6000	.8400	.9250
.000	.4749	.3059	.3058	.3300	.2518
.050	-.3243	-.3977	-.5585	-.6242	-.6839
.150	-.5060	-.4322	-.5648	-.6372	-.7148
.300	-.0120	-.4392	-.5505	-.5979	-.5708
.520	-.1931	-.3977	-.5558	-.5633	-.4749
.685	-.4128	-.5743	-.6920	-.4884	-.5236
.775	-.3399	-.5458	-.6039	-.4734	-.4517
.900		-.4556	-.4836	-.4752	-.4211

ARC11-716 IA14 O1+T12+S12N25+AT10 RIGHT VERTICAL (RB1R33)

ALPHAO(5) = -2.870 BETAO (2) = -8.030

SECTION (1)RIGHT VERTICAL DEPENDENT VARIABLE CP

Z/BV	.1580	.3160	.6000	.8400	.9250
X/CV					
.000	.5481	.4048	.4224	.4406	.3677
.050	-.2436	-.3307	-.5308	-.6581	-.7289
.150	-.3514	-.3432	-.5099	-.6347	-.6848
.300	.0221	-.3099	-.4485	-.4855	-.5527
.520	-.1622	-.2711	-.4300	-.4550	-.3929
.685	-.4428	-.5606	-.6474	-.6281	-.6434
.775	-.3469	-.4675	-.6187	-.5995	-.6572
.900		-.4321	-.4811	-.4519	-.5519

ALPHAO(5) = -2.870 BETAO (3) = -5.960

SECTION (1)RIGHT VERTICAL DEPENDENT VARIABLE CP

Z/BV	.1580	.3130	.6000	.8400	.9250
X/CV					
.000	.5892	.4786	.5127	.5251	.4770
.050	-.1598	-.2831	-.4954	-.6360	-.6830
.150	-.1288	-.2537	-.3772	-.5923	-.5902
.300	.0051	-.1735	-.2949	-.4557	-.4624
.520	-.1179	-.1571	-.2751	-.2765	-.2872
.685	-.4271	-.5532	-.5725	-.5526	-.5666
.775	-.3168	-.4516	-.5503	-.5686	-.5674
.900		-.3727	-.5276	-.5747	-.5551

ALPHAO(5) = -2.860 BETAO (4) = -3.920

SECTION (1)RIGHT VERTICAL DEPENDENT VARIABLE CP

Z/BV	.1580	.3160	.6000	.8400	.9250
X/CV					
.000	.6336	.5310	.5624	.5676	.5427
.050	-.0954	-.2647	-.4943	-.5762	-.6092
.150	.0756	-.1079	-.2451	-.4847	-.4893
.300	.0101	-.0689	-.1209	-.1819	-.3316
.520	-.1097	-.1172	-.1537	-.1273	-.0355
.685	-.3632	-.5564	-.5429	-.4910	-.4853
.775	-.2751	-.4269	-.5424	-.4987	-.4855
.900		-.3561	-.5114	-.5100	-.4893

ARC11-716 1A14 O4+T12+S12M25+AT10 RIGHT VERTICAL (RB1R33)

ALPHAO(5) = -2.000 BETAO (5) = -2.000

SECTION (1:RIGHT VERTICAL DEPENDENT VARIABLE CP

X/CV \ Z/BV	.1580	.3160	.6000	.8400	.9250
.000	.6841	.5790	.5932	.5934	.5916
.050	.0213	-.1553	-.3166	-.3878	-.3982
.150	.1783	.0692	-.0023	-.0813	-.1421
.300	.0454	-.0194	-.0049	.0104	.0329
.520	-.0622	-.0671	-.0898	-.0713	-.0358
.685	-.3581	-.5400	-.5152	-.4753	-.4886
.775	-.2661	-.4343	-.5144	-.4911	-.4957
.900		-.3372	-.4845	-.5058	-.4963

ALPHAO(5) = -2.850 BETAO (6) = .020

SECTION (1)RIGHT VERTICAL DEPENDENT VARIABLE CP

X/CV \ Z/BV	.1580	.3160	.6000	.8400	.9250
.000	.6780	.5964	.6024	.5869	.6117
.050	.2030	.0190	-.0685	-.0774	-.0632
.150	.2284	.1357	.1087	.1290	.1804
.300	.0896	.0538	.0755	.1012	.0863
.520	-.0071	-.0062	-.0392	-.0255	-.0323
.685	-.3775	-.5133	-.5030	-.4676	-.4828
.775	-.2699	-.4827	-.4922	-.4834	-.4958
.900		-.3336	-.4660	-.4958	-.4985

ALPHAO(5) = -2.850 BETAO (7) = 2.020

SECTION (1)RIGHT VERTICAL DEPENDENT VARIABLE CP

X/CV \ Z/BV	.1580	.3160	.6000	.8400	.9250
.000	.6664	.5912	.5902	.5430	.5788
.050	.3577	.2287	.2025	.2489	.2478
.150	.2774	.2138	.2056	.2282	.2346
.300	.1461	.1217	.1532	.1775	.1315
.520	.0557	.0460	.0090	.0409	-.0122
.685	-.4046	-.4900	-.4866	-.4515	-.4801
.775	-.2649	-.4940	-.4697	-.4562	-.4980
.900		-.3227	-.4223	-.4656	-.5140

ARC11-716 IA14 OL+T12+S12N25+AT10 RIGHT VERTICAL (RB1R33)

ALPHAO(5) = -2.770 BETAO (8) = 4.100

SECTION (1)RIGHT VERTICAL DEPENDENT VARIABLE CP

Z/BV	.1580	.3160	.6000	.8400	.9250
X/CV					
.000	.6219	.5500	.5415	.4768	.5258
.050	.4541	.3600	.3439	.3744	.3610
.150	.3387	.2848	.3027	.3127	.3091
.300	.2161	.2159	.2322	.2396	.1901
.520	.1257	.1131	.0801	.0713	.0070
.685	-.4038	-.4558	-.4584	-.4484	-.4670
.775	-.2694	-.4661	-.4383	-.4474	-.4870
.900		-.3080	-.3949	-.4474	-.5022

ALPHAO(5) = -2.790 BETAO (9) = 6.120

SECTION (1)RIGHT VERTICAL DEPENDENT VARIABLE CP

Z/BV	.1580	.3160	.6000	.8400	.9250
X/CV					
.000	.5746	.4977	.4923	.4157	.4671
.050	.5485	.4689	.4543	.4611	.4428
.150	.4090	.3823	.3852	.3877	.3713
.300	.3022	.3024	.2951	.2968	.2354
.520	.2001	.1644	.1405	.0988	.0096
.685	-.3845	-.4287	-.4353	-.4439	-.4661
.775	-.2679	-.4210	-.4057	-.4286	-.4709
.900		-.2757	-.3532	-.4129	-.4795

ALPHAO(5) = -2.790 BETAO (10) = 8.140

SECTION (1)RIGHT VERTICAL DEPENDENT VARIABLE CP

Z/BV	.1580	.3160	.6000	.8400	.9250
X/CV					
.000	.5304	.4274	.4108	.3146	.3755
.050	.6123	.5652	.5363	.5347	.5044
.150	.4795	.4628	.4478	.4477	.4176
.300	.3766	.3650	.3427	.3413	.2717
.520	.2531	.2063	.1793	.1223	.0186
.685	-.3453	-.4065	-.4089	-.4356	-.4532
.775	-.2687	-.3906	-.3793	-.4074	-.4492
.900		-.2525	-.3205	-.3818	-.4492

ARC11-716 IA14 O&+T12+S12N25+AT10 RIGHT VERTICAL (RB1R33)

ALPHAO(5. = -2.770 BETAO (11) = 10.100

SECTION (1)RIGHT VERTICAL DEPENDENT VARIABLE CP

Z/BV	.1580	.3160	.6000	.8400	.9250
X/CV					
.000	.4559	.3000	.2754	.1664	.2567
.050	.6831	.6413	.6011	.5872	.5517
.150	.5508	.5361	.5048	.4977	.4649
.300	.4483	.4317	.3669	.3901	.3026
.520	.3108	.2377	.2065	.1509	.0287
.685	-.3061	-.3728	-.3834	-.4088	-.4393
.775	-.2614	-.3456	-.3491	-.3737	-.4222
.900		-.2151	-.2697	-.3355	-.4137

ALPHAO(6) = -.760 BETAO (1) = -10.520

SECTION (1)RIGHT VERTICAL DEPENDENT VARIABLE CP

Z/BV	.1580	.3160	.6000	.8400	.9250
X/CV					
.000	.3904	.2443	.2214	.2402	.1590
.050	-.4259	-.4297	-.5940	-.6401	-.6926
.150	-.5627	-.4638	-.5994	-.6686	-.7001
.300	-.0590	-.5090	-.5927	-.6456	-.6089
.520	-.2213	-.4818	-.6012	-.5740	-.5515
.685	-.4180	-.5558	-.6802	-.5005	-.5168
.775	-.2748	-.5744	-.6182	-.4963	-.5064
.900		-.4755	-.5055	-.5055	-.4901

ALPHAO(6) = -.730 BETAO (2) = -8.420

SECTION (1)RIGHT VERTICAL DEPENDENT VARIABLE CP

Z/BV	.1580	.3160	.6000	.8400	.9250
X/CV					
.000	.4571	.3339	.3415	.3504	.2782
.050	-.3221	-.3688	-.5418	-.6474	-.7069
.150	-.4466	-.3858	-.5450	-.6340	-.7256
.300	-.0067	-.3918	-.4985	-.5542	-.5370
.520	-.1880	-.3562	-.4940	-.5395	-.4222
.685	-.4180	-.5678	-.6769	-.5671	-.6279
.775	-.3314	-.5045	-.6349	-.5266	-.5200
.900		-.4413	-.4714	-.4782	-.3835

ARC11-716 IA14 O1+T12+S12N25+AT10 RIGHT VERTICAL (RB1R33)

ALPHAO(6) = -.730 BETAO (3) = -6.290

SECTION (1)RIGHT VERTICAL DEPENDENT VARIABLE CP

Z/BV	.1580	.3160	.6000	.8400	.9250
X/CV					
.000	.5198	.4256	.4497	.4581	.3960
.050	-.2048	-.2995	-.5259	-.6453	-.7031
.150	-.2274	-.2841	-.4323	-.6162	-.6262
.300	-.0010	-.2330	-.3544	-.4735	-.5060
.520	-.1497	-.2133	-.3300	-.3279	-.3511
.685	-.4256	-.5564	-.6027	-.5699	-.5968
.775	-.3242	-.4514	-.5732	-.5940	-.6027
.900		-.3993	-.5212	-.5840	-.5973

ALPHAO(6) = -.710 BETAO (4) = -4.140

SECTION (1)RIGHT VERTICAL DEPENDENT VARIABLE CP

Z/BV	.1580	.3160	.6000	.8400	.9250
X/CV					
.000	.5605	.4803	.5078	.5158	.4897
.050	-.1398	-.2920	-.5239	-.5797	-.6321
.150	-.0169	-.1842	-.3142	-.4980	-.5190
.300	-.0230	-.1212	-.1791	-.3013	-.3771
.520	-.1298	-.1555	-.1961	-.1345	-.0840
.685	-.4025	-.5671	-.5478	-.4780	-.5041
.775	-.3074	-.4381	-.5361	-.4978	-.5059
.900		-.3683	-.4782	-.5074	-.5126

ALPHAO(6) = -.700 BETAO (5) = -2.080

SECTION (1)RIGHT VERTICAL DEPENDENT VARIABLE CP

Z/BV	.1580	.3160	.6000	.8400	.9250
X/CV					
.000	.6035	.5427	.5491	.5381	.5335
.050	-.0391	-.2012	-.3663	-.4626	-.4450
.150	.1482	.0450	-.0705	-.1501	-.3246
.300	.0233	-.0616	-.0498	-.0254	-.0055
.520	-.0903	-.1011	-.1288	-.1087	-.0577
.685	-.3567	-.5507	-.5297	-.4819	-.4983
.775	-.2702	-.4262	-.5313	-.5040	-.5074
.900		-.3390	-.4899	-.5167	-.5140

ARC11-716 1A14 OL+T12+S12N25+AT10 RIGHT VERTICAL (RB1R33)

ALPHAO(6) = -.700 BETAO (6) = .030

SECTION (1)RIGHT VERTICAL DEPENDENT VARIABLE CP

Z/BV	.1580	.3160	.6000	.8400	.9250
X/CV					
.000	.6179	.5846	.5630	.5329	.5617
.050	.1560	-.0044	-.1032	-.1134	-.0970
.150	.2003	.1358	.0540	.0988	.1106
.300	.0654	.0096	.0461	.0821	.0624
.520	-.0267	-.0335	-.0616	-.0459	-.0516
.685	-.3942	-.5225	-.5098	-.4673	-.4902
.775	-.2629	-.4619	-.5024	-.4892	-.5054
.900		-.3236	-.4610	-.5003	-.5097

ALPHAO(6) = -.700 BETAO (7) = 2.160

SECTION (1)RIGHT VERTICAL DEPENDENT VARIABLE CP

Z/BV	.1580	.3160	.6000	.8400	.9250
X/CV					
.000	.6129	.5556	.5426	.4893	.5270
.050	.3238	.2040	.1558	.2144	.2281
.150	.2450	.2061	.1589	.1969	.1878
.300	.1165	.0772	.1237	.1473	.1046
.520	.0221	.0151	-.0187	.0073	-.0354
.685	-.3918	-.5030	-.4999	-.4667	-.4873
.775	-.2584	-.4889	-.4850	-.4841	-.5070
.900		-.3120	-.4349	-.4894	-.5081

ALPHAO(6) = -.710 BETAO (8) = 4.270

SECTION (1)RIGHT VERTICAL DEPENDENT VARIABLE CP

Z/BV	.1580	.3160	.6000	.8400	.9250
X/CV					
.000	.5872	.5056	.4967	.4424	.4847
.050	.4302	.3379	.2984	.3453	.3476
.150	.3115	.2625	.2655	.2860	.2636
.300	.1812	.1706	.2080	.2179	.1644
.520	.1024	.0874	.0620	.0497	-.0187
.685	-.4239	-.4648	-.4721	-.4540	-.4813
.775	-.2586	-.4771	-.4543	-.4622	-.4992
.900		-.2981	-.4017	-.4567	-.5008

ORIGINAL PAGE IS OF POOR QUALITY

ARC11-716 IA14 O1+T12+S12N25+AT10 RIGHT VERTICAL (RB1R33)

ALPHAO(8) = -.730 BETAO (9) = 8.350

SECTION (1)RIGHT VERTICAL DEPENDENT VARIABLE CP

Z/BV	.1580	.3160	.6000	.8400	.9250
X/CV					
.000	.5556	.4828	.4499	.3817	.4084
.050	.5201	.4478	.4014	.4268	.4281
.150	.3827	.3650	.3467	.3556	.3217
.300	.2650	.2619	.2661	.2729	.2082
.520	.1804	.1482	.1164	.0760	-.0149
.685	-.4020	-.4404	-.4456	-.4516	-.4781
.775	-.2590	-.4383	-.4246	-.4427	-.4853
.900		-.2834	-.3646	-.4244	-.4924

ALPHAO(8) = -.730 BETAO (10) = 8.130

SECTION (1)RIGHT VERTICAL DEPENDENT VARIABLE CP

Z/BV	.1580	.3160	.6000	.8400	.9250
X/CV					
.000	.4840	.3880	.3699	.2655	.3262
.050	.5737	.5366	.4776	.4936	.4787
.150	.4300	.4352	.4067	.4120	.3658
.300	.3375	.3229	.3114	.3152	.2408
.520	.2272	.1787	.1548	.1025	-.0076
.685	-.3750	-.4209	-.4238	-.4437	-.4681
.775	-.2685	-.4084	-.3997	-.4239	-.4665
.900		-.2606	-.3364	-.3948	-.4609

ALPHAO(8) = -.750 BETAO (11) = 10.110

SECTION (1)RIGHT VERTICAL DEPENDENT VARIABLE CP

Z/BV	.1580	.3160	.6000	.8400	.9250
X/CV					
.000	.4170	.2784	.2407	.1318	.2148
.050	.6394	.6170	.5472	.5534	.5274
.150	.4997	.5074	.4655	.4649	.4100
.300	.4064	.3849	.3565	.3631	.2778
.520	.2794	.2137	.1814	.1362	.0083
.685	-.3329	-.3885	-.3963	-.4110	-.4495
.775	-.2640	-.3654	-.3633	-.3832	-.4352
.900		-.2302	-.2809	-.3433	-.4265

ARC11-716 IA14 OI+T12+S12N25+AT10 RIGHT VERTICAL (RB1R33)

ALPHAO(7) = 2.010 BETAO (1) = -10.080

SECTION (1)RIGHT VERTICAL DEPENDENT VARIABLE CP

Z/BV	.1580	.3160	.6000	.8400	.9250
X/CV					
.000	.3679	.2253	.2047	.2017	.1288
.050	-.4873	-.4665	-.5882	-.6414	.6956
.150	-.5796	-.4859	-.5955	-.6713	-.6958
.300	-.1192	-.5291	-.5863	-.6445	-.6206
.520	-.2345	-.4918	-.5968	-.5833	-.5477
.685	-.4172	-.5336	-.6671	-.5074	-.5233
.775	-.2690	-.5479	-.6164	-.5011	-.5109
.900		-.4581	-.5084	-.5084	-.4964

ALPHAO(7) = 2.000 BETAO (2) = -8.040

SECTION (1)RIGHT VERTICAL DEPENDENT VARIABLE CP

Z/BV	.1580	.3160	.6000	.8400	.9250
X/CV					
.000	.4335	.3117	.3143	.3080	.2386
.050	-.3621	-.4117	-.5510	-.6394	-.7151
.150	-.4400	-.4117	-.5575	-.6158	-.7238
.300	-.0528	-.4101	-.5006	-.5385	-.5434
.520	-.2272	-.3583	-.4940	-.5195	-.4108
.685	-.4022	-.5229	-.6710	-.5473	-.6189
.775	-.2732	-.4932	-.6203	-.5045	-.5101
.900		-.4291	-.4541	-.4516	-.3733

ALPHAO(7) = 2.050 BETAO (3) = -6.040

SECTION (1)RIGHT VERTICAL DEPENDENT VARIABLE CP

Z/BV	.1580	.3160	.6000	.8400	.9250
X/CV					
.000	.5013	.3809	.4038	.3933	.3363
.050	-.2878	-.3348	-.5291	-.6649	-.7083
.150	-.2779	-.3196	-.4495	-.6373	-.6468
.300	-.0140	-.2739	-.3716	-.4580	-.5194
.520	-.1695	-.2349	-.3358	-.3468	-.3047
.685	-.4014	-.5517	-.6104	-.5881	-.5902
.775	-.2818	-.4413	-.5839	-.6066	-.5923
.900		-.4188	-.5207	-.5847	-.5886

ARC11-716 IA14 O1+T12+S12N25+AT10 RIGHT VERTICAL (RB1R33)

ALPHAO(7) = 1.920 BETAO (4) = -3.990

SECTION (1)RIGHT VERTICAL DEPENDENT VARIABLE CP

Z/BV	.1580	.3160	.6000	.8400	.9250
X/CV					
.000	.5212	.4391	.4580	.4606	.4316
.050	-.1550	-.3141	-.5234	-.5974	-.6308
.150	-.0636	-.1781	-.3354	-.5154	-.5312
.300	-.0370	-.1387	-.1542	-.2027	-.3600
.520	-.1521	-.1732	-.1803	-.1665	-.0952
.685	-.3639	-.5514	-.5629	-.5091	-.4967
.775	-.2636	-.3895	-.5553	-.5344	-.5020
.900		-.3608	-.5136	-.5333	-.5262

ALPHAO(7) = 1.920 BETAO (5) = -2.020

SECTION (1)RIGHT VERTICAL DEPENDENT VARIABLE CP

Z/BV	.1580	.3160	.6000	.8400	.9250
X/CV					
.000	.6201	.4982	.5001	.4771	.4808
.050	.0243	-.2125	-.3542	-.4280	-.4459
.150	.1143	.0292	-.0758	-.1445	-.2139
.300	-.0083	-.0808	-.0693	-.0434	-.0337
.520	-.1214	-.1220	-.1429	-.1227	-.0850
.685	-.3186	-.5426	-.5392	-.4928	-.4966
.775	-.2348	-.3821	-.5397	-.5154	-.5106
.900		-.3461	-.5053	-.5227	-.5132

ALPHAO(7) = 1.920 BETAO (6) = .010

SECTION (1)RIGHT VERTICAL DEPENDENT VARIABLE CP

Z/BV	.1580	.3160	.6000	.8400	.9250
X/CV					
.000	.5673	.5111	.5033	.4686	.4975
.050	.1562	-.0394	-.1278	-.1348	-.1233
.150	.1595	.0999	.0145	.0592	.0708
.300	.0307	-.0208	.0109	.0433	.0257
.520	-.0605	-.0839	-.0905	-.0785	-.0620
.685	-.3716	-.5322	-.5233	-.4820	-.4967
.775	-.2618	-.4157	-.5181	-.5010	-.5120
.900		-.3110	-.4787	-.5044	-.5162

ARC11-716 IA14 O1+T12+S12N25+AT10 RIGHT VERTICAL (RB1R33)

ALPHAO(7) = 1.920 BETAO (7) = 2.050

SECTION (1)RIGHT VERTICAL DEPENDENT VARIABLE CP

Z/BV	.1580	.3160	.6000	.8400	.9250
X/CV					
.000	.6245	.5119	.4910	.4341	.4711
.050	.3150	.1745	.1210	.1726	.1959
.150	.2166	.1729	.1192	.1575	.1506
.300	.0886	.0450	.0902	.1138	.0763
.520	-.0135	-.0124	-.0442	-.0188	-.0427
.685	-.3423	-.5068	-.5059	-.4795	-.4906
.775	-.2471	-.4436	-.4952	-.4968	-.5132
.900		-.2938	-.4530	-.4861	-.5019

ALPHAO(7) = 1.900 BETAO (8) = 4.080

SECTION (1)RIGHT VERTICAL DEPENDENT VARIABLE CP

Z/BV	.1580	.3160	.6000	.8400	.9250
X/CV					
.000	.5560	.4653	.4507	.3963	.4580
.050	.3952	.2942	.2484	.3005	.3074
.150	.2683	.2139	.2204	.2449	.2443
.300	.1309	.1260	.1665	.1820	.1615
.520	.0635	.0656	.0337	.0257	-.0207
.685	-.4355	-.4724	-.4823	-.4598	-.4859
.775	-.2506	-.4810	-.4679	-.4624	-.5057
.900		-.2919	-.4154	-.4559	-.5139

ALPHAO(7) = 2.040 BETAO (9) = 6.080

SECTION (1)RIGHT VERTICAL DEPENDENT VARIABLE CP

Z/BV	.1580	.3160	.6000	.8400	.9250
X/CV					
.000	.5165	.4250	.4096	.3119	.3596
.050	.4620	.3934	.3525	.3787	.3843
.150	.3268	.3039	.3017	.3075	.2817
.300	.2147	.2184	.2285	.2368	.1984
.520	.1411	.1181	.0825	.0483	-.0237
.685	-.4317	-.4900	-.4574	-.4506	-.4765
.775	-.2560	-.4527	-.4422	-.4503	-.4872
.900		-.2897	-.3830	-.4249	-.4917

ORIGINAL PAGE IS OF POOR QUALITY

ARC11-716 1A14 OL+T12+S12NE5+AT10 RIGHT VERTICAL (RB1R33)

ALPHAO(7) = 2.030 BETAO (10) = 8.110

SECTION (1)RIGHT VERTICAL DEPENDENT VARIABLE CP

Z/BV	.1580	.3160	.6000	.8400	.9250
X/CV					
.000	.4412	.3439	.3168	.2029	.2616
.090	.5180	.4795	.4379	.4500	.4422
.190	.3747	.3888	.3690	.3697	.3325
.300	.2845	.2859	.2793	.2815	.2087
.520	.1957	.1564	.1197	.0765	-.0278
.685	-.4057	-.4255	-.4331	-.4475	-.4695
.775	-.2663	-.4197	-.4140	-.4329	-.4663
.900		-.2679	-.3513	-.3957	-.4629

ALPHAO(7) = 2.550 BETAO (11) = 10.150

SECTION (1)RIGHT VERTICAL DEPENDENT VARIABLE CP

Z/BV	.1580	.3160	.6000	.8400	.9250
X/CV					
.000	.3570	.2326	.1811	.0601	.1401
.050	.5598	.5571	.4988	.5042	.4878
.150	.4268	.4576	.4214	.4225	.3871
.300	.3506	.3429	.3178	.3263	.2445
.520	.2432	.1865	.1469	.1094	-.0163
.685	-.3739	-.4011	-.4089	-.4137	-.4566
.775	-.2722	-.3616	-.3790	-.3987	-.4447
.900		-.2591	-.2982	-.3546	-.4310

ALPHAO(8) = 4.300 BETAO (1) = -9.980

SECTION (1)RIGHT VERTICAL DEPENDENT VARIABLE CP

Z/BV	.1580	.3160	.6000	.8400	.9250
X/CV					
.000	.3298	.1951	.1604	.1518	.0861
.090	-.4374	-.4972	-.6190	-.6479	-.6979
.190	-.3515	-.5017	-.6261	-.6823	-.6925
.300	-.1875	-.5267	-.6104	-.6572	-.6540
.520	-.3079	-.4850	-.6099	-.5832	-.5931
.685	-.3163	-.5103	-.6389	-.5023	-.5437
.775	-.2672	-.5204	-.6313	-.5051	-.5243
.900		-.3877	-.5178	-.5124	-.5131

ARC11-T16 IA14 O1+T12+S12N2S+AT10 RIGHT VERTICAL (RB1R33)

ALPHA(8) = 4.200 BETA(2) = -8.080

SECTION (1)RIGHT VERTICAL DEPENDENT VARIABLE CP

Z/BV	.1580	.3160	.6000	.8400	.9250
X/CV					
.000	.4528	.2780	.2749	.2588	.1908
.090	-.3962	-.4547	-.5740	-.6423	-.7123
.150	-.2597	-.4453	-.5823	-.6324	-.7262
.300	-.1697	-.4361	-.5168	-.5581	-.5553
.520	-.2747	-.2969	-.5066	-.5439	-.4427
.685	-.3115	-.4449	-.6586	-.5475	-.5689
.775	-.2666	-.4227	-.5951	-.5058	-.4713
.900		-.3426	-.4708	-.4703	-.3957

ALPHA(8) = 4.200 BETA(3) = -5.990

SECTION (1)RIGHT VERTICAL DEPENDENT VARIABLE CP

Z/BV	.1580	.3160	.6000	.8400	.9250
X/CV					
.000	.4878	.3672	.3616	.3439	.2958
.090	-.2986	-.3647	-.5425	-.6705	-.7176
.150	-.1754	-.3337	-.4658	-.6444	-.6542
.300	-.0956	-.2652	-.3823	-.4514	-.5272
.520	-.2271	-.2464	-.3416	-.3537	-.2831
.685	-.2853	-.4910	-.6174	-.5824	-.5904
.775	-.2308	-.4179	-.5882	-.6020	-.5933
.900		-.4111	-.4583	-.5423	-.5996

ALPHA(8) = 4.200 BETA(4) = -3.970

SECTION (1)RIGHT VERTICAL DEPENDENT VARIABLE CP

Z/BV	.1580	.3160	.6000	.8400	.9250
X/CV					
.000	.5024	.4015	.4229	.4089	.3829
.090	-.1842	-.3304	-.5245	-.6031	-.6328
.150	-.0843	-.1821	-.3312	-.5231	-.5577
.300	-.0822	-.1647	-.1762	-.1899	-.3096
.520	-.1065	-.2012	-.2090	-.1891	-.0998
.685	-.3406	-.4930	-.5784	-.5159	-.5116
.775	-.2322	-.3672	-.5688	-.5566	-.5249
.900		-.3711	-.4936	-.5361	-.5516

ARC11-716 IA14 OL+T12+B12M25+AT10 RIGHT VERTICAL (RB1R33)

ALPHAO(5) = 4.220 BETAO (5) = -2.000

SECTION (1)RIGHT VERTICAL DEPENDENT VARIABLE CP

Z/BV	.1580	.3160	.6000	.8400	.9250
X/CV					
.000	.5471	.4550	.4508	.4214	.4235
.050	.1310	-.2164	-.3630	-.4303	-.4595
.150	.0920	.0103	-.1091	-.1687	-.2160
.300	-.0340	-.1099	-.0977	-.0698	-.0464
.520	-.1526	-.1543	-.1715	-.1462	-.1054
.685	-.2822	-.5273	-.5583	-.4991	-.5080
.775	-.2362	-.3703	-.5576	-.5193	-.5224
.900		-.3627	-.5102	-.5278	-.5334

ALPHAO(6) = 4.240 BETAO (6) = -.070

SECTION (1)RIGHT VERTICAL DEPENDENT VARIABLE CP

Z/BV	.1580	.3160	.6000	.8400	.9250
X/CV					
.000	.5483	.4668	.4517	.4132	.4818
.050	.1554	-.0551	-.1504	-.1477	-.1156
.150	.1511	.0687	-.0185	.0303	.0734
.300	-.0121	-.0542	-.0172	.0199	.0281
.520	.0874	-.0865	-.1145	-.0787	-.0642
.685	-.3593	-.5408	-.5358	-.4810	-.5119
.775	-.2529	-.3854	-.5306	-.5032	-.5310
.900		-.5125	-.4828	-.5125	-.5373

ALPHAO(8) = 1.220 BETAO (7) = 1.990

SECTION (1)RIGHT VERTICAL DEPENDENT VARIABLE CP

Z/BV	.1580	.3160	.6000	.8400	.9250
X/CV					
.000	.5519	.4704	.4406	.3908	.4202
.050	.3166	.1809	.0922	.1502	.1725
.150	.1982	.1249	.0906	.1347	.1267
.300	.0565	.0178	.0679	.0935	.0558
.520	-.0293	-.0228	-.0639	-.0323	-.0618
.685	-.3394	-.5129	-.5128	-.4775	-.4992
.775	-.2326	-.4256	-.5053	-.4964	-.5249
.900		-.2098	-.4456	-.4885	-.5052

ARC11-716 IA14 O1+T12+S12N25+AT10 RIGHT VERTICAL (RB1R33)

ORIGINAL PAGE IS OF POOR QUALITY

ALPHAO(8) = 4.430 BETAO (8) = 4.100

SECTION (1)RIGHT VERTICAL DEPENDENT VARIABLE CP

Z/BV	.1580	.3160	.6000	.8400	.9250
X/CV					
.000	.3172	.4357	.4084	.3380	.4177
.050	.3488	.2622	.2193	.2651	.3157
.150	.2269	.1810	.1904	.2171	.2263
.300	.0995	.0975	.1429	.1796	.1333
.520	.0336	.0480	.0139	.0197	-.0367
.685	-.4400	-.4786	-.4916	-.4665	-.4961
.775	-.2613	-.4849	-.4733	-.4802	-.5205
.900		-.2947	-.4229	-.4696	-.5286

ALPHAO(8) = 4.410 BETAO (9) = 6.060

SECTION (1)RIGHT VERTICAL DEPENDENT VARIABLE CP

Z/BV	.1580	.3160	.6000	.8400	.9250
X/CV					
.000	.4920	.3919	.3721	.2817	.3143
.050	.4159	.3488	.3185	.3487	.3603
.150	.2807	.2670	.2707	.2788	.2748
.300	.1816	.1865	.2013	.2131	.1687
.520	.1098	.0996	.0643	.0479	-.0464
.685	-.4561	-.4516	-.4684	-.4479	-.4829
.775	.2749	-.4620	-.4517	-.4505	-.4960
.900		-.3069	-.3872	-.4257	-.4984

PHAO(8) = 4.410 BETAO (10) = 8.150

SECTION (1)RIGHT VERTICAL DEPENDENT VARIABLE CP

Z/BV	.1580	.3160	.6000	.8400	.9250
X/CV					
.000	.4330	.3091	.2754	.1506	.2180
.050	.4689	.4367	.3943	.4126	.4291
.150	.3333	.3434	.3308	.3369	.3219
.300	.2401	.2467	.2491	.2669	.2056
.520	.1576	.1353	.0925	.0777	-.0354
.685	-.4482	-.4354	-.4453	-.4393	-.4756
.775	-.2787	-.4346	-.4276	-.4316	-.4745
.900		-.2965	-.3565	-.3977	-.4722

ARC11-716 IA14 OL+T12+S12N25+AT10 RIGHT VERTICAL (RB1R33)

ALPHAO(8) = 4.390 BETAO (11) = 10.140

SECTION (1)RIGHT VERTICAL DEPENDENT VARIABLE CP

Z/BV	.1580	.3160	.6000	.8400	.9250
X/CV					
.000	.3116	.1944	.1393	.0108	.0895
.050	.5110	.5131	.4659	.4671	.4577
.150	.3609	.4183	.3957	.3892	.3520
.300	.2881	.3079	.2962	.2983	.2346
.520	.2187	.1691	.1274	.0882	-.0237
.685	-.3940	-.4083	-.4156	-.4218	-.4579
.775	-.2778	-.4041	-.3863	-.4055	-.4392
.900		-.2782	-.3206	-.3576	-.4331

ALPHAO(9) = 6.340 BETAO (1) = -9.960

SECTION (1)RIGHT VERTICAL DEPENDENT VARIABLE CP

Z/BV	.1580	.3160	.6000	.8400	.9250
X/CV					
.000	.3038	.1658	.1305	.1076	.0491
.050	-.4251	-.5070	-.6297	-.6445	-.6873
.150	-.3820	-.5075	-.6360	-.6786	-.6782
.300	-.2691	-.5461	-.6154	-.6621	-.6570
.520	-.3565	-.4577	-.6104	-.5803	-.6141
.685	-.3121	-.4051	-.5974	-.5018	-.5488
.775	-.2787	-.3772	-.6130	-.5145	-.5266
.900		-.2395	-.5351	-.5403	-.5158

ALPHAO(9) = 8.380 BETAO (2) = -7.970

SECTION (1)RIGHT VERTICAL DEPENDENT VARIABLE CP

Z/BV	.1580	.3160	.6000	.8400	.9250
X/CV					
.000	.4415	.2599	.2443	.2221	.1640
.050	-.3103	-.4573	-.5815	-.6331	-.7102
.150	-.0839	-.4503	-.5872	-.6351	-.7060
.300	-.2129	-.3723	-.5202	-.5601	-.5477
.520	-.3343	-.2959	-.5027	-.5381	-.4440
.685	-.3325	-.3867	-.6214	-.5197	-.5658
.775	-.2842	-.3705	-.5609	-.4860	-.4669
.900		-.2831	-.4597	-.4647	-.4161

ARC11-716 1A14 OL+T12+S12N25+AT10 RIGHT VERTICAL (RB1R33)

ALPHAO(9) = 5.980 BETAO (3) = -6.000

SECTION (1)RIGHT VERTICAL DEPENDENT VARIABLE CP

Z/BV	.1580	.3160	.6000	.8400	.9250
X/CV					
.000	.4895	.3521	.3338	.3003	.2545
.050	-.2828	-.3731	-.5489	-.6722	-.7138
.150	.0476	-.3219	-.4816	-.6436	-.6573
.300	-.1269	-.2639	-.3953	-.4313	-.5299
.520	-.2513	-.2624	-.3447	-.3519	-.2778
.685	-.3152	-.4516	-.6237	-.5793	-.5924
.775	-.2596	-.4037	-.5867	-.5982	-.6010
.900		-.3202	-.4140	-.4736	-.6031

ALPHAO(9) = 5.990 BETAO (4) = -4.010

SECTION (1)RIGHT VERTICAL DEPENDENT VARIABLE CP

Z/BV	.1580	.3160	.6000	.8400	.9250
X/CV					
.000	.4896	.3815	.3813	.3659	.3470
.050	-.1759	-.3388	-.5120	-.6091	-.6357
.150	-.0264	-.1812	-.3358	-.5408	-.5466
.300	-.0903	-.1853	-.1912	-.1858	-.2502
.520	-.2098	-.2096	-.2269	-.1998	-.1219
.685	-.3120	-.4831	-.5860	-.5147	-.5172
.775	-.2335	-.3672	-.5753	-.5429	-.5360
.900		-.3823	-.4584	-.5468	-.5624

ALPHAO(9) = 6.010 BETAO (5) = -2.060

SECTION (1)RIGHT VERTICAL DEPENDENT VARIABLE CP

Z/BV	.1580	.3160	.6000	.8400	.9250
X/CV					
.000	.4496	.4310	.4091	.3803	.3960
.050	.1352	-.2396	-.3764	-.4355	-.4710
.150	.0783	-.0013	-.1434	-.1965	-.2120
.300	-.0551	-.1335	-.1187	-.0844	-.0713
.520	-.1668	-.1734	-.1890	-.1402	-.1145
.685	-.2993	-.5218	-.5677	-.4913	-.5182
.775	-.2451	-.3722	-.5664	-.5186	-.5381
.900		-.3670	-.4867	-.5281	-.5454

ARC11-716 IA14 O1+T12+S12N25+AT10 RIGHT VERTICAL (RB1R33)

ALPHAO(9) = 6.020 BETAO (6) = .050

SECTION (1)RIGHT VERTICAL DEPENDENT VARIABLE CP

Z/BV	.1580	.3160	.6000	.8400	.9250
X/CV					
.000	.5386	.4477	.4132	.3752	.4440
.050	.1347	-.0711	-.1680	-.1593	-.1054
.150	.1208	.0564	-.0423	.0163	.0536
.300	-.0207	-.0804	-.0423	.0287	.0046
.520	-.1066	-.1005	-.1302	-.0814	-.0978
.685	-.3699	-.5501	-.5436	-.4804	-.5162
.775	-.2650	-.3967	-.5394	-.5056	-.5395
.900		-.3248	-.4812	-.5118	-.5450

ALPHAO(9) = 6.010 BETAO (7) = 2.060

SECTION (1)RIGHT VERTICAL DEPENDENT VARIABLE CP

Z/BV	.1580	.3160	.6000	.8400	.9250
X/CV					
.000	.4990	.4532	.3943	.3573	.4114
.050	.3006	.1410	.0595	.1488	.1725
.150	.1735	.1016	.0634	.1379	.1287
.300	.0207	-.0102	.0393	.0957	.0518
.520	-.0456	-.0339	-.0796	-.0352	-.0866
.685	-.3927	-.5222	-.5250	-.4892	-.5168
.775	-.2457	-.4497	-.5137	-.5125	-.5456
.900		-.2930	-.4525	-.5055	-.5231

ALPHAO(9) = 5.990 BETAO (8) = 4.060

SECTION (1)RIGHT VERTICAL DEPENDENT VARIABLE CP

Z/BV	.1580	.3160	.6000	.8400	.9250
X/CV					
.000	.4912	.4157	.3791	.3176	.3854
.050	.3165	.2352	.1873	.2600	.2858
.150	.1982	.1506	.1621	.2248	.2007
.300	.0686	.0739	.1219	.1622	.1058
.520	.0192	.0307	-.0057	.0065	-.0683
.685	-.4563	-.4864	-.5012	-.4653	-.5055
.775	-.2710	-.4986	-.4864	-.4828	-.5317
.900		-.3050	-.4123	-.4677	-.5382

ARC11-716 IA14 O1+T12+S12N25+AT10 RIGHT VERTICAL (RB1R33)

ALPHAO(9) = 5.980 BETAO (9) = 6.090

SECTION (1)RIGHT VERTICAL DEPENDENT VARIABLE CP

Z/BV	.1580	.3160	.6000	.8400	.9250
X/CV					
.000	.4730	.3740	.3314	.2268	.3005
.050	.3750	.3243	.2883	.3288	.3563
.150	.2448	.2423	.2396	.2522	.2564
.300	.1430	.1537	.1767	.2109	.1502
.520	.0748	.0784	.0451	.0315	-.0633
.685	-.4755	-.4620	-.4805	-.4609	-.4946
.775	-.2930	-.4743	-.4659	-.4681	-.5097
.900		-.3182	-.3975	-.4381	-.5129

ALPHAO(9) = 5.970 BETAO (10) = 8.160

SECTION (1)RIGHT VERTICAL DEPENDENT VARIABLE CP

Z/BV	.1580	.3160	.6000	.8400	.9250
X/CV					
.000	.4569	.2969	.2489	.1256	.2089
.050	.4015	.4067	.3606	.3850	.4133
.150	.2763	.3131	.2992	.3312	.3080
.300	.1792	.2043	.2223	.2457	.1864
.520	.0893	.1080	.0781	.0624	-.0509
.685	-.4937	-.4418	-.4538	-.4407	-.4836
.775	-.2888	-.4454	-.4350	-.4407	-.4846
.900		-.3276	-.3672	-.4028	-.4812

ALPHAO(9) = 5.950 BETAO (11) = 10.160

SECTION (1)RIGHT VERTICAL DEPENDENT VARIABLE CP

Z/BV	.1580	.3160	.6000	.8400	.9250
X/CV					
.000	.2674	.1679	.1174	-.0094	.0612
.050	.4829	.4766	.4372	.4439	.4578
.150	.3042	.3803	.3662	.3685	.3549
.300	.2243	.2710	.2760	.2907	.2277
.520	.1757	.1527	.1100	.0958	-.0308
.685	-.4297	-.4154	-.4253	-.4129	-.4594
.775	-.2904	-.4222	-.3940	-.4028	-.4424
.900		-.3198	-.3213	-.3555	-.4361

ARC11-716 IA14 O1+T12+S12N25+AT10 RIGHT VERTICAL (RB1R33)

ALPHAO(10) = 7.910 BETAO (1) = -10.030

SECTION (1)RIGHT VERTICAL DEPENDENT VARIABLE CP

Z/BV	.1580	.3160	.6000	.8400	.9250
X/CV					
.000	.2915	.1472	.1095	.0728	.0440
.050	-.4384	-.5142	-.6399	-.6548	-.6506
.150	-.2273	-.5228	-.6471	-.6852	-.6405
.300	-.3124	-.5365	-.6261	-.6633	-.6329
.520	-.4064	-.3808	-.6051	-.5699	-.6285
.685	-.3325	-.3466	-.5754	-.5190	-.5472
.775	-.2994	-.3326	-.5901	-.5397	-.5321
.900		-.2811	-.5412	-.5593	-.5323

ALPHAO(10) = 7.930 BETAO (2) = -8.030

SECTION (1)RIGHT VERTICAL DEPENDENT VARIABLE CP

Z/BV	.1580	.3160	.6000	.8400	.9250
X/CV					
.000	.4246	.2492	.2229	.2108	.1509
.050	-.2928	-.4472	-.5816	-.6332	-.6964
.150	-.0773	-.4409	-.5868	-.6466	-.6894
.300	-.2306	-.3594	-.5285	-.5754	-.5769
.520	-.3626	-.3029	-.5109	-.5604	-.4791
.685	-.3589	-.3687	-.5948	-.5202	-.5375
.775	-.2900	-.3671	-.5609	-.4990	-.4700
.900		-.2796	-.4601	-.4947	-.4439

ALPHAO(10) = 7.810 BETAO (3) = -5.970

SECTION (1)RIGHT VERTICAL DEPENDENT VARIABLE CP

Z/BV	.1580	.3160	.6000	.8400	.9250
X/CV					
.000	.4780	.3342	.3025	.2834	.2497
.050	-.2476	-.3801	-.5549	-.6812	-.7256
.150	.0200	-.3197	-.5005	-.6503	-.6776
.300	-.1470	-.2490	-.4089	-.4205	-.5438
.520	-.2788	-.2778	-.3511	-.3760	-.2970
.685	-.3431	-.4376	-.6334	-.5860	-.6116
.775	-.2781	-.4049	-.5811	-.6066	-.6192
.900		-.3044	-.3958	-.4488	-.5759

ARC11-716 IA14 O1+T12+S12N25+AT10 RIGHT VERTICAL (RB1R33)

ALPHAO(10) = 7.830 BETAO (4) = -4.000

SECTION 1)RIGHT VERTICAL DEPENDENT VARIABLE CP

X/CV \ Z/BV	.1580	.3160	.6000	.8400	.9250
.000	.4893	.3682	.3562	.3162	.3315
.050	-.1409	-.3234	-.4977	-.5980	-.6400
.150	.0015	-.1567	-.3275	-.5406	-.5842
.300	-.1001	-.1765	-.2031	-.1706	-.1885
.520	-.2080	-.2125	-.2417	-.2034	-.1473
.685	-.3188	-.5013	-.5907	-.5185	-.5367
.775	-.2548	-.3853	-.5829	-.5516	-.5552
.900		-.3910	-.4372	-.5516	-.5753

ALPHAO(10) = 7.830 BETAO (5) = -2.030

SECTION (1)RIGHT VERTICAL DEPENDENT VARIABLE CP

X/CV \ Z/BV	.1580	.3160	.6000	.8400	.9250
.000	.4530	.4109	.3720	.3414	.3739
.050	.1260	-.2369	-.3781	-.4275	-.4627
.150	.0693	-.0157	-.1509	-.2128	-.2161
.300	-.0747	-.1525	-.1340	-.0905	-.0891
.520	-.1818	-.1964	-.2045	-.1609	-.1314
.685	-.3264	-.5557	-.5730	-.5038	-.5252
.775	-.2567	-.3787	-.5709	-.5339	-.5479
.900		-.3740	-.4732	-.5431	-.5578

ALPHAO(10) = 7.840 BETAO (6) = .040

SECTION (1)RIGHT VERTICAL DEPENDENT VARIABLE CP

X/CV \ Z/BV	.1580	.3[illegible]	.6000	.8400	.9250
.000	.5342	.4343	.3739	.3329	.3980
.050	.1017	-.0836	-.1800	-.1708	-.1343
.150	.1106	.0392	-.0641	.0053	.0312
.300	-.0411	-.0966	-.0625	.0084	-.0130
.520	-.1244	-.1222	-.1471	-.1047	-.1169
.685	-.3703	-.5551	-.5478	-.4927	-.5254
.775	-.2696	-.3946	-.5432	-.5219	-.5506
.900		-.3378	-.4865	-.5240	-.5535

ARC11-716 IA14 O1+T12+S12N25+AT10 RIGHT VERTICAL (RR1R33)

ALPHAO(10) = 7.830 BETAO (7) = 2.040

SECTION (1)RIGHT VERTICAL DEPENDENT VARIABLE CP

Z/BV	.1580	.3160	.6000	.8400	.9250
X/CV					
.000	.4917	.4349	.3601	.3082	.3748
.050	.2655	.1208	.0407	.1080	.1579
.150	.1527	.0960	.0473	.1008	.1124
.300	-.0018	-.0315	.0267	.0622	.0407
.520	-.0614	-.0443	-.0874	-.0475	-.0793
.685	-.4149	-.5150	-.5189	-.4739	-.5167
.775	-.2626	-.4610	-.5132	-.4990	-.5465
.900		-.2922	-.4527	-.4898	-.5222

ALPHAO(10) = 7.870 BETAO (8) = 4.060

SECTION (1)RIGHT VERTICAL DEPENDENT VARIABLE CP

Z/BV	.1580	.3160	.6000	.8400	.9250
X/CV					
.000	.4890	.4034	.3544	.2629	.3355
.050	.2840	.2113	.1638	.2329	.2668
.150	.1655	.1350	.1405	.1913	.1785
.300	.0350	.0525	.1036	.1509	.0889
.520	.0036	.0240	-.0224	-.0090	-.0658
.685	-.4636	-.4896	-.5092	-.4741	-.5092
.775	-.2756	-.5110	-.4915	-.4967	-.5365
.900		-.3258	-.4334	-.4793	-.5409

ALPHAO(10) = 7.970 BETAO (9) = 6.160

SECTION (1)RIGHT VERTICAL DEPENDENT VARIABLE CP

Z/BV	.1580	.3160	.6000	.8400	.9250
X/CV					
.000	.4717	.3861	.3011	.1900	.2569
.050	.3128	.3015	.2643	.3016	.3331
.150	.1944	.2168	.2172	.2259	.2368
.300	.0798	.1300	.1577	.1827	.1290
.520	.0474	.0810	.0291	.0238	-.0737
.685	-.4939	-.4552	-.4817	-.4516	-.4950
.775	-.3260	-.4811	-.4643	-.4634	-.5100
.900		-.3794	-.4027	-.4351	-.5115

ARC11-718 IA14 O1+T12+S12N25+AT10 RIGHT VERTICAL (RB1R33)

ORIGINAL PAGE IS OF POOR QUALITY

ALPHAO(10) = 7.960 BETAO (10) = 8.110

SECTION (1)RIGHT VERTICAL DEPENDENT VARIABLE CP

Z/BV	.1580	.3160	.6000	.8400	.9250
X/CV					
.000	.4433	.2945	.2160	.0795	.1548
.050	.3143	.3950	.3379	.3565	.3688
.150	.1958	.2947	.2746	.2788	.2696
.300	.0824	.1689	.2030	.2215	.1703
.520	.0322	.0847	.0625	.0478	-.0640
.685	-.5000	-.4413	-.4546	-.4400	-.4829
.775	-.3544	-.4636	-.4356	-.4462	-.4821
.900		-.4283	-.3669	-.4098	-.4790

ALPHAO(10) = 7.960 BETAO (11) = 10.230

SECTION (1)RIGHT VERTICAL DEPENDENT VARIABLE CP

Z/BV	.1580	.3160	.6000	.8400	.9250
X/CV					
.000	.2871	.1402	.0870	-.0505	.0381
.050	.4171	.4522	.4012	.4093	.4282
.150	.2797	.3434	.3356	.3378	.3217
.300	.1569	.2211	.2524	.2577	.2029
.520	.0765	.1219	.0909	.0722	-.0486
.685	-.5104	-.4280	-.4323	-.4239	-.4680
.775	-.3236	-.4345	-.4007	-.4182	-.4515
.900		-.3868	-.3347	-.3711	-.4449

ALPHAO(11) = 9.890 BETAO (1) = -9.960

SECTION (1)RIGHT VERTICAL DEPENDENT VARIABLE CP

Z/BV	.1580	.3160	.6000	.8400	.9250
X/CV					
.000	.2370	.1423	.0750	.0650	.0155
.050	-.1801	-.5005	-.6448	-.6394	-.6605
.150	-.1915	-.5316	-.6479	-.6645	-.6451
.300	-.3456	-.3940	-.6329	-.6517	-.6436
.520	-.4521	-.3828	-.6010	-.5783	-.6384
.685	-.3832	-.3302	-.5645	-.5239	-.5554
.775	-.3196	-.2981	-.5821	-.5416	-.5390
.900		-.2947	-.5165	-.5632	-.5327

ARC11-716 IA14 O1+T12+S12N25+AT10 RIGHT VERTICAL (RB1R33)

ALPHAO(11) = 9.930 BETAO (2) = -7.920

SECTION (1)RIGHT VERTICAL DEPENDENT VARIABLE CP

Z/BV	.1580	.3160	.6000	.8400	.9250
X/CV					
.000	.3089	.2742	.1908	.1784	.1156
.050	-.0131	-.4326	-.5882	-.6263	-.6886
.150	-.0966	-.4106	-.5928	-.6530	-.6845
.300	-.2689	-.2485	-.5341	-.5841	-.5891
.520	-.3810	-.3367	-.5062	-.5692	-.4926
.685	-.4015	-.3929	-.5892	-.5196	-.5342
.775	-.3081	-.3600	-.5349	-.5046	-.4802
.900		-.2870	-.4264	-.5028	-.4542

ALPHAO(11) = 9.940 BETAO (3) = -6.010

SECTION (1)RIGHT VERTICAL DEPENDENT VARIABLE CP

Z/BV	.1580	.3160	.6000	.8400	.9250
X/CV					
.000	.4849	.3295	.2697	.2651	.2060
.050	-.2144	-.3790	-.5543	-.6721	-.7261
.150	.0034	-.3071	-.5175	-.6186	-.6930
.300	-.1617	-.2405	-.4192	-.4396	-.5341
.520	-.2962	-.2956	-.3566	-.4077	-.3174
.685	-.3736	-.4490	-.6319	-.5836	-.6224
.775	-.2948	-.3904	-.5429	-.6034	-.6289
.900		-.3075	-.3753	-.4460	-.5112

ALPHAO(11) = 9.690 BETAO (4) = -3.990

SECTION (1)RIGHT VERTICAL DEPENDENT VARIABLE CP

Z/BV	.1580	.3160	.6000	.8400	.9250
X/CV					
.000	.4767	.3569	.3230	.3130	.2669
.050	-.1294	-.3340	-.5006	-.6110	-.6418
.150	.0238	-.1502	-.3601	-.5473	-.6027
.300	-.1117	-.1919	-.2311	-.1990	-.2206
.520	-.2239	-.2298	-.2508	-.2331	-.1732
.685	-.3371	-.4983	-.5851	-.5229	-.5477
.775	-.2657	-.3923	-.5771	-.5598	-.5657
.900		-.4008	-.3998	-.5575	-.5839

ARC11-716 TA14 OI+T12+S12N25+A710 RIGHT VERTICAL (RB1R33)

ALPHAO(11) = 9.900 BETAO (5) = -1.980

SECTION (1)RIGHT VERTICAL DEPENDENT VARIABLE CP

Z/BV	.1580	.3160	.6000	.8400	.9250
X/CV					
.000	.4874	.3898	.3441	.3337	.3094
.090	.0767	-.2503	-.3940	-.4364	-.4564
.190	.0608	-.0284	-.1744	-.2086	-.2596
.300	-.0917	-.1671	-.1573	-.1009	-.1180
.520	-.1956	-.2023	-.2114	-.1813	.1621
.685	-.3567	-.5271	-.5667	-.5052	-.5376
.775	-.2624	-.3812	-.5657	-.5423	-.5623
.900		-.3836	-.4000	-.5474	-.5675

ALPHAO(11) = 9.910 BETAO (6) = .020

SECTION (1)RIGHT VERTICAL DEPENDENT VARIABLE CP

Z/BV	.1580	.3160	.6000	.8400	.9250
X/CV					
.000	.5295	.4133	.3437	.3219	.3318
.090	.1330	-.0909	-.1975	-.1738	-.1626
.190	.0966	.0220	-.0688	-.0134	-.0270
.300	-.0589	-.1196	-.0815	-.0239	-.0486
.520	-.1464	-.1406	-.1510	-.1269	-.1426
.685	-.3585	-.5567	-.5414	-.4986	-.5354
.775	-.2744	-.3976	-.5388	-.5316	-.5630
.900		-.3520	-.4806	-.5301	-.5656

ALPHAO(11) = 9.900 BETAO (7) = 2.040

SECTION (1)RIGHT VERTICAL DEPENDENT VARIABLE CP

Z/BV	.1580	.3160	.6000	.8400	.9250
X/CV					
.000	.5117	.4111	.3351	.2982	.3152
.090	.2358	.0901	.0108	.1089	.1169
.190	.1252	.0919	.0172	.0887	.0739
.300	-.0312	-.0582	.0044	.0525	-.0017
.520	-.0865	-.0893	-.0849	-.0863	-.1299
.685	-.4026	-.5279	-.5193	-.4874	-.5315
.775	-.2882	-.4529	-.5162	-.5201	-.5643
.900		-.3035	-.4568	-.5089	-.5367

ARC11-716 IA14 OL+T12+S12NB5+AT10 RIGHT VERTICAL (RB1R33)

ALPHAO(11) = 9.900 BETAO (8) = 4.130

SECTION (1)RIGHT VERTICAL DEPENDENT VARIABLE CP

Z/BV	.1580	.3160	.6000	.8400	.9250
X/CV					
.000	.4871	.3922	.3162	.2646	.2833
.090	.2791	.1882	.1311	.2185	.2203
.150	.1309	.1069	.1113	.1658	.1506
.300	-.0025	.0143	.0787	.1042	.0540
.520	-.0173	.0017	-.0149	-.0378	-.1126
.685	-.4384	-.4993	-.5038	-.4862	-.5238
.775	-.2554	-.5250	-.4890	-.5138	-.5522
.900		-.5344	-.4413	-.4916	-.5564

ALPHAO(11) = 9.990 BETAO (9) = 6.100

SECTION (1)RIGHT VERTICAL DEPENDENT VARIABLE CP

Z/BV	.1580	.3160	.6000	.8400	.9250
X/CV					
.000	.4556	.3631	.2682	.1833	.2076
.090	.2755	.2758	.2297	.2981	.2996
.150	.1659	.1829	.1837	.2249	.1992
.300	.0309	.0791	.1234	.1634	.0977
.520	.0296	.0498	.0234	-.0081	-.1025
.685	-.4768	-.4778	-.4823	-.4705	-.5100
.775	-.3234	-.5076	-.4647	-.4885	-.5264
.900		-.4017	-.4104	-.4584	-.5262

ALPHAO (11) = 9.870 BETAO (10) = 8.110

SECTION (1)RIGHT VERTICAL DEPENDENT VARIABLE CP

Z/BV	.1580	.3160	.6000	.8400	.9250
X/CV					
.000	.3793	.3091	.1842	.0846	.1182
.090	.1822	.3639	.2998	.3579	.3544
.150	.1243	.2554	.2409	.2787	.2601
.300	.0084	.1259	.1757	.2131	.1349
.520	-.0327	.0578	.0611	.0303	-.0883
.685	-.5241	-.4836	-.4562	-.4478	-.5003
.775	-.3750	-.4851	-.4352	-.4590	-.5001
.900		-.4597	-.3675	-.4194	-.4975

ARC11-718 IA14 O6+T12+S12N25+AT1D RIGHT VERTICAL (RB1R33)

ALPHAO(11) = 10.000 BETAO (11) = 10.190

SECTION (1)RIGHT VERTICAL DEPENDENT VARIABLE CP

Z/BV	.1580	.3160	.6000	.8400	.9250
X/CV					
.000	.2525	.1576	.0566	-.0554	[illegible]49
.050	.2707	.4400	.3728	.4175	.0579
.150	.1317	.3253	.3066	.3500	.3054
.300	-.0061	.1930	.2269	.2664	.1815
.525	-.0[illegible]95	.1043	.0753	.0677	-.0703
.685	-.5260	-.4501	-.4359	-.4197	-.4719
.775	.3906	-.4513	-.3929	-.4174	-.4522
.900		-.4527	-.3181	-.3694	-.4441

ARC11-716 IA14 OL+T12+S12N25+AT11 RIGHT VERTICAL (RB1R34) (15 FEB 74)

REFERENCE DATA

SREF = 2.4210 SQ.FT. XMRP = 28.5800 INCHES
LREF = 58.7090 INCHES YMRP = .0000 INCHES
BREF = 58.7090 INCHES ZMRP = .0000 INCHES
SCALE = .0300 SCALE

PARAMETRIC DATA

MACH = .600 ELEVON = .000
RUDDER = .000 SPDBRK = .000

ALPHAO(1) = -8.010 BETAO (1) = -7.980

SECTION (1)RIGHT VERTICAL DEPENDENT VARIABLE CP

Z/BV	.1580	.3160	.6000	.8400	.9250
X/CV					
.000	-.0679	-.3119	-.2589	-.0171	-.0297
.050	-1.0090	-.7751	-.9061	-.9112	-.6653
.150	-1.0290	-.7741	-.9056	-.8590	-.6343
.300	-.2471	-.4001	-.8136	-.7584	-.5529
.520	-.3597	-.4952	-.5950	-.5560	-.4266
.645	.2961	.4464	-.4727	-.4351	-.3568
.775	-.2644	-.3245	-.3174	-.3894	-.3201
.900		.2204	.1930	-.3100	-.2574

ALPHAO(1) = -7.990 BETAO (2) = -3.980

SECTION (1)RIGHT VERTICAL DEPENDENT VARIABLE CP

Z/BV	.1580	.3160	.6000	.8400	.9250
X/CV					
.000	.5067	.2221	.2995	.3947	.3186
.050	-.5336	-.5944	-.5741	-.7053	-.8043
.150	-.2188	-.4148	-.4680	-.5475	-.6617
.300	-.2015	-.2561	-.3667	-.3651	-.3214
.520	-.3001	-.3601	-.4662	-.4073	-.2940
.645	-.2960	-.4245	-.4548	-.4325	-.3434
.775	-.2367	-.2908	-.2528	-.2786	-.1894
.900		-.1636	-.0996	-.0959	-.0738

ALPHAO(1) = -7.990 BETAO (3) = .030

SECTION (1)RIGHT VERTICAL DEPENDENT VARIABLE CP

Z/BV	.1580	.3160	.6000	.8400	.9250
X/CV					
.000	.4850	.4796	.5434	.5339	.5458
.050	.0878	.0203	-.0446	-.0478	-.0834
.150	.0142	-.0323	-.0784	-.0850	-.0921
.300	-.0713	-.1088	-.1514	-.1482	-.1460
.520	-.2323	-.3185	-.4149	-.3426	-.3028
.645	-.2749	-.4407	-.3837	-.3064	-.3267

ARC11-715 IA14 O1+T12+S12N25+AT11 RIGHT VERTICAL (RB1R34)

ALPHAO(1) = -7.990 BETAO (3) = .030

SECTION (1)RIGHT VERTICAL DEPENDENT VARIABLE CP

Z/BV	.1580	.3160	.6000	.8400	.9250
X/CV					
.775	-.2049	-.2401	-.2288	-.2055	-.1507
.900		-.1481	-.0758	-.0340	-.0397

ALPHAO(1) = -8.000 BETAO (4) = 4.090

SECTION (1)RIGHT VERTICAL DEPENDENT VARIABLE CP

Z/BV	.1580	.3160	.6000	.8400	.9250
X/CV					
.000	.3056	.2123	.2638	.1755	.2783
.050	.2774	.2539	.2267	.2430	.2077
.150	.1744	.1457	.1235	.1248	.0959
.300	.0559	.0179	.0069	-.0090	-.0347
.520	-.1693	-.2564	-.2897	-.2913	-.2438
.685	-.2736	-.3566	-.3107	-.3465	-.2591
.775	-.2002	-.1979	-.1898	-.1692	-.1373
.900		-.1487	-.0842	-.0592	-.0787

ALPHAO(1) = -8.020 BETAO (5) = 8.130

SECTION (1)RIGHT VERTICAL DEPENDENT VARIABLE CP

Z/BV	.1580	.3160	.6000	.8400	.9250
X/CV					
.000	-.0852	-.3480	-.2906	-.2256	.0372
.050	.4560	.4361	.4303	.4198	.3451
.150	.3227	.2876	.2778	.2613	.1921
.300	.1806	.1342	.1205	.0906	.0279
.520	-.0980	-.2002	-.1928	-.2624	-.2239
.685	-.2802	-.2619	-.2700	-.3273	-.2862
.775	-.2182	-.1814	-.1901	-.2095	-.1953
.900		-.1554	-.1111	-.1721	-.1976

ARC11-716 IA14 O1+T12+S12N25+AT11 RIGHT VERTICAL (RB1R34)

ALPHAO(2) = -4.050 BETAO (1) = -8.030

SECTION (1)RIGHT VERTICAL DEPENDENT VARIABLE CP

Z/BV	.1580	.3160	.6000	.8400	.9250
X/CV					
.000	-.1363	-.3794	-.3608	-.1084	-.1021
.050	-1.0730	-.8038	-.9885	-.8627	-.6524
.150	-1.0700	-.7396	-.9369	-.8277	-.6137
.300	-.2743	-.6880	-.8979	-.7421	-.5298
.520	-.3693	-.4897	-.6225	-.5396	-.4124
.685	-.2871	-.4329	-.4794	-.4208	-.3493
.775	-.2704	-.3175	-.3108	-.3750	-.3203
.900		-.2211	-.1679	-.2972	-.2494

ALPHAO(2) = -4.050 BETAO (2) = -4.000

SECTION (1)RIGHT VERTICAL DEPENDENT VARIABLE CP

Z/BV	.1580	.3160	.6000	.8400	.9250
X/CV					
.000	.2694	.1736	.2258	.3261	.2528
.050	-.5938	-.6125	-.5652	-.7141	-.7537
.150	-.2444	-.4378	-.4808	-.5987	-.6516
.300	-.2320	-.2652	-.3739	-.3749	-.3450
.520	-.3055	-.3635	-.4574	-.3900	-.2845
.685	-.2829	-.4198	-.4679	-.3974	-.3250
.775	-.2370	-.2898	-.2529	-.2535	-.1789
.900		-.1648	-.0956	-.0892	-.0763

ALPHAO(2) = -4.050 BETAO (3) = .040

SECTION (1)RIGHT VERTICAL DEPENDENT VARIABLE CP

Z/BV	.1580	.3160	.6000	.8400	.9250
X/CV					
.000	.4410	.4301	.4854	.4659	.4823
.050	.0348	.0019	-.0457	-.0623	-.0891
.150	-.0151	-.0526	-.0818	-.0980	-.0960
.300	-.0955	-.1182	-.1537	-.1601	-.1488
.520	-.2388	-.3135	-.3872	-.3565	-.2964
.685	-.2617	-.4170	-.3694	-.4839	-.3126
.775	-.1962	-.2323	-.2235	-.2165	-.1398
.900		-.1531	-.0801	-.0537	-.0198

ARC11-716 IA14 O1+T12+S12N25+AT11 RIGHT VERTICAL (RB1R34)

ALPHAO(2) = -4.060 BETAO (4) = 4.070

SECTION (1)RIGHT VERTICAL DEPENDENT VARIABLE CP

X/CV \ Z/BV	.1580	.3160	.6000	.8400	.9250
.000	.2600	.1511	.1882	.1017	.1853
.050	.2346	.2196	.1996	.2143	.1863
.150	.1405	.1113	.1060	.1013	.0722
.300	.0259	-.0030	-.0108	-.0259	-.0553
.520	-.1799	-.2589	-.2903	-.2952	-.2553
.685	-.2797	-.3521	-.3161	-.3533	-.2739
.775	-.2061	-.2016	-.1909	-.1783	-.1431
.900		-.1575	-.0945	-.0753	-.0805

ALPHAO(2) = -4.060 BETAO (5) = 8.090

SECTION (1)RIGHT VERTICAL DEPENDENT VARIABLE CP

X/CV \ Z/BV	.1580	.3160	.6000	.8400	.9250
.000	-.1301	-.4109	-.3791	-.3214	-.0381
.050	.4200	.4013	.3928	.3848	.3125
.150	.2873	.2584	.2521	.2387	.1663
.300	.1474	.1156	.1038	.0698	.0085
.520	-.1150	-.2067	-.1932	-.2626	-.2243
.685	-.2802	-.2639	-.2576	-.3275	-.2747
.775	-.2158	-.1840	-.1790	-.2131	-.1989
.900		-.1596	-.1061	-.1777	-.2081

ALPHAO(3) = -.310 BETAO (1) = -8.030

SECTION (1)RIGHT VERTICAL DEPENDENT VARIABLE CP

X/CV \ Z/BV	.1580	.3160	.6000	.8400	.9250
.000	-.1902	-.4246	-.4275	-.2197	-.2250
.050	-1.0810	-.8205	-.9372	-.8700	-.6810
.150	-1.1170	-.7535	-.9258	-.8389	-.6273
.300	-.2870	-.7217	-.9058	-.7494	-.5602
.520	-.3473	-.4726	-.5977	-.5391	-.4308
.685	-.2743	-.4129	-.4329	-.4324	-.3444
.775	-.2466	-.2861	-.2756	-.3671	-.3062
.900		-.2073	-.1418	-.2602	-.2438

ORIGINAL PAGE IS OF POOR QUALITY

ARC11-716 IA14 O1+T12+S12N25+AT11 RIGHT VERTICAL (RB1R34)

ALPHAO(3) = -.320 BETAO (2) = -4.010

SECTION (1)RIGHT VERTICAL DEPENDENT VARIABLE CP

Z/BV	.1580	.3160	.6000	.8400	.9250
X/CV					
.000	.2279	.1272	.1808	.2601	.1940
.050	-.6314	-.6133	-.5726	-.7038	-.7000
.150	-.2632	-.4439	-.4968	-.6302	-.6294
.300	-.2516	-.2680	-.3989	-.3837	-.3526
.520	-.2985	-.3553	-.4414	-.3642	-.2677
.685	-.2650	-.3982	-.4219	-.3798	-.2924
.775	-.2329	-.2770	-.2401	-.2466	-.1629
.900		-.1621	-.0939	-.0876	-.0629

ALPHAO(3) = -.320 BETAO (3) = .030

SECTION (1)RIGHT VERTICAL DEPENDENT VARIABLE CP

Z/BV	.1580	.3160	.6000	.8400	.9250
X/CV					
.000	.4044	.3851	.4402	.4140	.4247
.050	.0087	-.0110	-.0627	-.0720	-.0998
.150	-.0466	-.0657	-.0941	-.1048	-.0995
.300	-.1108	-.1297	-.1555	-.1573	-.1515
.520	-.2396	-.3019	-.3728	-.3391	-.2825
.685	-.2518	-.3962	-.3537	-.4395	-.2888
.775	-.1920	-.2333	-.2067	-.2121	-.1262
.900		-.1530	-.0799	-.0524	-.0168

ALPHAO(3) = -.320 BETAO (4) = 4.080

SECTION (1)RIGHT VERTICAL DEPENDENT VARIABLE CP

Z/BV	.1580	.3160	.6000	.8400	.9250
X/CV					
.000	.2123	.0895	.1168	.0043	.0925
.050	.2107	.1965	.1855	.2028	.1725
.150	.1127	.1023	.0947	.0898	.0644
.300	.0150	-.0116	-.0175	-.0287	-.0573
.520	-.1795	-.2579	-.2698	-.2787	-.2412
.685	-.2664	-.3473	-.3040	-.3240	-.2516
.775	-.1943	-.1971	-.1830	-.1703	-.1398
.900		-.1633	-.0806	-.0649	-.0802

ARC11-716 1A14 O1+T12+S12N25+AT11 RIGHT VERTICAL (RB1R34)

ALPHAO(3) = -.320 BETAO (5) = 8.110

SECTION (1)RIGHT VERTICAL DEPENDENT VARIABLE CP

Z/BV	.1580	.3160	.6000	.8400	.9250
X/CV					
.000	-.1888	-.5050	-.4802	-.4074	-.1063
.050	.3967	.3792	.3685	.3628	.2792
.150	.2647	.2422	.2373	.2183	.1413
.300	.1338	.1027	.1002	.0594	-.0118
.520	-.1179	-.2097	-.1821	-.2655	-.2303
.685	-.2786	-.2636	-.2416	-.3163	-.2675
.775	-.2166	-.1871	-.1729	-.2134	-.2021
.900		-.1632	-.1123	-.1953	-.2060

ALPHAO(4) = 4.000 BETAO (1) = -8.050

SECTION (1)RIGHT VERTICAL DEPENDENT VARIABLE CP

Z/BV	.1580	.3160	.6000	.8400	.9250
X/CV					
.000	-.2444	-.5174	-.5365	-.3453	-.3196
.050	-1.1020	-.8359	-.9119	-.8480	-.6345
.150	-1.1570	-.7993	-.9425	-.8308	-.5861
.300	-.3159	-.7924	-.9638	-.7812	-.5179
.520	-.3331	-.4214	-.5439	-.5431	-.4204
.685	-.2550	-.3717	-.3688	-.4089	-.3427
.775	-.2090	-.2575	-.2329	-.3264	-.2946
.900		-.2060	-.1285	-.2154	-.2343

ALPHAO(4) = 4.000 BETAO (2) = -3.980

SECTION (1)RIGHT VERTICAL DEPENDENT VARIABLE CP

Z/BV	.1580	.3160	.6000	.8400	.9250
X/CV					
.000	.1835	.0694	.1138	.1701	.1099
.050	-.6432	-.5838	-.5524	-.6689	-.6729
.150	-.2737	-.4605	-.5171	-.6217	-.6044
.300	-.2515	-.2590	-.3958	-.3881	-.3293
.520	-.2788	-.3245	-.3985	-.3311	-.2422
.685	-.2298	-.3548	-.3808	-.3311	-.2634
.775	-.1953	-.2374	-.2129	-.2182	-.1476
.900		-.1446	-.0803	-.0761	-.0515

ARC11-716 IA14 O1+T12+S12N25+AT11 RIGHT VERTICAL (RB1R34)

ALPHAO(4) = 4.000 BETAO (3) = .030

SECTION (1)RIGHT VERTICAL DEPENDENT VARIABLE CP

Z/BV	.1580	.3160	.6000	.8400	.9250
X/CV					
.000	.3722	.3370	.3829	.3519	.3624
.050	-.0218	-.0287	-.0758	-.0662	-.1058
.150	-.0703	-.0836	-.0950	-.1005	-.1055
.300	-.1316	-.1346	-.1575	-.1408	-.1571
.520	-.2434	-.3024	-.3621	-.3165	-.2630
.685	-.2428	-.3871	-.3414	-.3867	-.2576
.775	-.2000	-.2283	-.1996	-.1970	-.1140
.900		-.1554	-.0734	-.0514	-.0186

ALPHAO(4) = 3.990 BETAO (4) = 4.080

SECTION (1)RIGHT VERTICAL DEPENDENT VARIABLE CP

Z/BV	.1580	.3160	.6000	.8400	.9250
X/CV					
.000	.1810	.0532	.0559	-.0519	.0267
.050	.1837	.1775	.1649	.1916	.1504
.150	.0929	.0862	.0789	.0889	.0426
.300	-.0045	-.0178	-.0168	-.0246	-.0718
.520	-.1763	-.2514	-.2523	-.2554	-.2327
.685	-.2626	-.3273	-.2871	-.2949	-.2198
.775	-.1819	-.1961	-.1668	-.1564	-.1241
.900		-.1559	-.0717	-.0485	-.0707

ALPHAO(4) = 3.980 BETAO (5) = 8.140

SECTION (1)RIGHT VERTICAL DEPENDENT VARIABLE CP

Z/BV	.1580	.3160	.6000	.8400	.9250
X/CV					
.000	-.2360	-.5634	-.5656	-.5316	-.2023
.050	.3654	.3492	.3358	.3351	.2562
.150	.2437	.2189	.2191	.2055	.1228
.300	.1204	.0944	.0937	.0609	-.0200
.520	-.1152	-.2005	-.1647	-.2467	-.2132
.685	-.2701	-.2535	-.2305	-.2838	-.2565
.775	-.2114	-.1772	-.1625	-.1882	-.1917
.900		-.1580	-.0970	-.1656	-.1980

ARC11-716 IA14 O1+T12+S12N25+AT11 RIGHT VERTICAL (RB1R34)

ALPHAO(5) = 7.890 BETAO (1) = -4.010

SECTION (1)RIGHT VERTICAL DEPENDENT VARIABLE CP

Z/BV	.1580	.3160	.6000	.8400	.9250
X/CV					
.000	-.2747	-.5714	-.5990	-.4333	-.3845
.050	-1.0820	-.8197	-.8970	-.7920	-.5954
.150	-.8359	-.8919	-.9562	-.7890	-.5721
.300	-.3435	-.7352	-.9784	-.7706	-.4933
.520	-.5109	-.3329	-.4184	-.4977	-.4208
.685	-.1919	-.2927	-.2881	-.3672	-.3260
.775	.1830	-.2173	-.1963	-.2858	-.2674
.900		-.2302	-.1163	-.1880	-.2182

ALPHAO(5) = 7.900 BETAO (2) = -4.010

SECTION (1)RIGHT VERTICAL DEPENDENT VARIABLE CP

Z/BV	.1580	.3160	.6000	.8400	.9250
X/CV					
.000	.1716	.0290	.0577	.0958	.0505
.050	-.6486	-.5763	-.5411	-.6618	-.6247
.150	-.2676	-.4492	-.5239	-.6333	-.5784
.300	-.2525	-.2458	-.3828	-.3746	-.3193
.520	-.2525	-.2982	-.3686	-.3075	-.2153
.685	-.1712	-.2979	-.3398	-.3021	-.2421
.775	-.1730	-.1932	-.1882	-.1914	-.1329
.900		-.1731	-.0858	-.0623	-.0407

ALPHAO(5) = 7.910 BETAO (3) = .040

SECTION (1)RIGHT VERTICAL DEPENDENT VARIABLE CP

Z/BV	.1580	.3160	.6000	.8400	.9250
X/CV					
.000	.3322	.3086	.3348	.2949	.3094
.050	-.0408	-.0390	-.0702	-.0773	-.1076
.150	-.0742	-.0824	-.0919	-.1028	-.0977
.300	-.1324	-.1363	-.1474	-.1512	-.1437
.520	-.2383	-.2881	-.3331	-.3058	-.2436
.685	-.2210	-.3625	-.3183	-.3428	-.2448
.775	-.1846	-.2173	-.1858	-.1799	-.1114
.900		-.1369	-.0758	-.0445	-.0171

ARC11-716 IA14 O1+T12+S12N25+AT11 RIGHT VERTICAL (RB1R34)

ALPHAO(5) = 7.900 BETAO (4) = 4.100

SECTION (1)RIGHT VERTICAL DEPENDENT VARIABLE CP

Z/BV	.1580	.3160	.6000	.8400	.9250
X/CV					
.000	.1462	.0106	-.0054	-.1201	-.0581
.050	.1627	.1660	.1571	.1748	.1322
.150	.0815	.0789	.0720	.0706	.0329
.300	-.0030	-.0175	-.0238	-.0283	-.0725
.520	-.1631	-.2335	-.2407	-.2444	-.2094
.685	-.2568	-.3287	-.2696	-.2762	-.2121
.775	-.1766	-.1985	-.1642	-.1571	-.1207
.900		-.1699	-.0832	-.0545	-.0695

ALPHAO(5) = 7.880 BETAO (5) = 8.170

SECTION (1)RIGHT VERTICAL DEPENDENT VARIABLE CP

Z/BV	.1580	.3160	.6000	.8400	.9250
X/CV					
.000	-.2525	-.5914	-.5994	-.5990	-.3022
.050	.3468	.3503	.3056	.3016	.2273
.150	.2226	.2157	.2040	.1839	.1066
.300	.1086	.0868	.0887	.0580	-.0219
.520	-.1137	-.1885	-.1580	-.2361	-.1885
.685	-.2742	-.2722	-.2238	-.2502	-.2407
.775	-.2109	-.1753	-.1452	-.1607	-.1722
.900		-.1765	-.1025	-.1337	-.1844

ARC11-716 TA14 OI+T12+S12N25+AT11 RIGHT VERTICAL (RB1R35) (15 FEB 74)

REFERENCE DATA

AREF = 2.4210 SQ.FT. XMRP = 29.5800 INCHES
LREF = 38.7090 INCHES YMRP = .0000 INCHES
BREF = 38.7090 INCHES ZMRP = .0000 INCHES
SCALE = .0300 SCALE

PARAMETRIC DATA

MACH = .750 ELEVON = .000
RUDDER = .000 SPOBRK = .000

ALPHAO(1) = -8.050 BETAO (1) = -8.000

SECTION (1)RIGHT VERTICAL DEPENDENT VARIABLE CP

Z/BV	.1580	.3160	.6000	.8400	.9250
X/CV					
.000	.0844	-.1577	-.0743	.1712	.1118
.050	-.9284	-.9227	-1.0460	-.6454	-.5538
.150	-1.0350	-.8537	-1.0110	-.6198	-.5783
.300	-.3161	-.8014	-.9340	-.6060	-.5820
.520	-.3760	-.5322	-.7071	-.5242	-.4538
.685	-.3059	-.4752	-.5826	-.4170	-.3285
.775	-.2858	-.3338	-.4828	-.3797	-.2398
.900		-.2426	-.3477	-.3184	-.2652

ALPHAO(1) = -8.040 BETAO (2) = -3.990

SECTION (1)RIGHT VERTICAL DEPENDENT VARIABLE CP

Z/BV	.1580	.3160	.6000	.8400	.9250
X/CV					
.000	.3515	.2786	.3502	.4261	.3526
.050	-.5450	-.5953	-.7101	-.8020	-.7762
.150	-.2237	-.4793	-.5576	-.7227	-.6889
.300	-.2234	-.2942	-.4370	-.4959	-.5227
.520	-.3288	-.4007	-.5463	-.4576	-.3769
.685	-.3161	-.5024	-.4831	-.4880	-.3547
.775	-.2649	-.3605	-.2818	-.2600	-.2103
.900		-.2093	-.1128	-.0957	-.0989

ALPHAO(1) = -8.040 BETAO (3) = .040

SECTION (1)RIGHT VERTICAL DEPENDENT VARIABLE CP

Z/BV	.1580	.3160	.6000	.8400	.9250
X/CV					
.000	.4851	.4852	.5498	.5322	.5430
.050	.0870	.0115	-.0712	-.0480	-.1008
.150	.0108	-.0292	-.0808	-.1126	-.1077
.300	-.0714	-.1087	-.1506	-.1871	-.1852
.520	-.2387	-.3395	-.4157	-.4105	-.3385
.685	-.2988	-.5130	-.5467	-.6184	-.4374

ORIGINAL PAGE IS OF POOR QUALITY

ARC11-716 IA14 OL+T12+S12N25+A711 RIGHT VERTICAL (RB1R35)

ALPHAO(1) = -8.040 BETAO (3) = .040

SECTION (1)RIGHT VERTICAL DEPENDENT VARIABLE CP

Z/BV	.1580	.3160	.6000	.8400	.9250
X/CV					
.775	-.2458	-.2960	-.2880	-.2759	-.1858
.900		-.2029	-.1042	-.0736	-.0426

ALPHAO(1) = -8.050 BETAO (4) = 4.080

SECTION (1)RIGHT VERTICAL DEPENDENT VARIABLE CP

Z/BV	.1580	.3160	.6000	.8400	.9250
X/CV					
.000	.5463	.2725	.3112	.2323	.3205
.050	.2840	.2539	.2172	.2319	.1844
.150	.1831	.1558	.1194	.1079	.0829
.300	.0690	.0153	.0104	-.0399	-.0713
.520	-.1667	-.2664	-.3213	-.3520	-.2965
.685	-.3142	-.4431	-.4361	-.4892	-.3652
.775	-.2302	-.2404	-.2440	-.2390	-.1576
.900		-.1860	-.1273	-.0868	-.0886

ALPHAO(1) = 8.060 BETAO (5) = 8.150

SECTION (1)RIGHT VERTICAL DEPENDENT VARIABLE CP

Z/BV	.1580	.3160	.6000	.8400	.9250
X/CV					
.000	.0640	-.1766	-.0945	-.0614	.1264
.050	.4715	.4491	.4192	.3930	.3237
.150	.3328	.3008	.2762	.2350	.1756
.300	.1954	.1411	.1161	.0565	-.0095
.520	-.0822	-.2025	-.2165	-.3203	-.2820
.685	-.3067	-.3526	-.3388	-.5135	-.4085
.775	-.2393	-.2091	-.2560	-.3271	-.2585
.900		-.1933	-.2109	-.2622	-.2442

A5C11-F16 TA14 C1+T1L+G12H25+A711 RIGHT VERTICAL (RB1R35)

ALPHA([illegible]) = [illegible] BETA([illegible]) = [illegible]

SECTION ([illegible]) [illegible] DEPENDENT VARIABLE CP

Z/BV	.1580	.3160	.6000	.8400	.9250
X/CV					
.000	.5198	-.2025	-.1621	[illegible]	[illegible]
.050	-.9754	.9604	-1.0[illegible]	-.6[illegible]	-.5535
.150	1.[illegible]	-.9034	-1.0[illegible]	-.6184	-.5627
.300	-.3[illegible]	-.4271	-.[illegible]14	.5[illegible]	.5835
.520	-.5[illegible]4	-.5081	-.7524	-.5198	-.4550
.685	-.5[illegible]	-.4618	-.5935	-.4279	-.3374
.775	-.2919	-.3245	.4[illegible]	.3945	.3[illegible]
.900		-.2584	-.3243	-.7176	.2580

ALPHA(2) = -4.080 BETA(2) = -4.000

SECTION (1)RIGHT VERTICAL DEPENDENT VARIABLE CP

Z/BV	.1580	.3160	.6000	.8400	.9250
X/CV					
.000	.5075	.2156	.2792	.3341	.2915
.050	-.5895	-.6311	-.6429	-.7808	-.7272
.150	-.2550	-.5035	-.5469	-.7395	-.6620
.300	-.2593	-.2023	-.4402	-.5045	-.5337
.520	-.3360	-.3920	-.5266	-.4324	-.3627
.685	-.3114	-.4756	-.4905	.4648	-.3349
.775	-.2640	-.3589	-.2830	-.2622	-.1987
.900		-.2103	-.1230	-.0928	-.0504

ALPHA(2) = -4.080 BETA(3) = .040

SECTION (1)RIGHT VERTICAL DEPENDENT VARIABLE CP

Z/BV	.1580	.3160	.6000	.8400	.9250
X/CV					
.000	.4411	.4316	.4837	.4609	.4728
.050	.0457	-.0110	-.0830	-.0541	-.1051
.150	-.0207	-.0549	-.0910	-.1205	-.1213
.300	-.1030	-.1259	-.1608	-.1892	-.1919
.520	-.2402	-.3538	-.4158	-.4002	-.3298
.685	-.2816	-.4595	-.4920	-.5701	-.3865
.775	-.2208	-.2742	-.2673	-.2585	-.1608
.900		-.1951	-.1095	-.0665	-.0338

ARC11-716 IA14 O1+T12+S12N25+AT11 RIGHT VERTICAL (RB1R35)

ALPHAO(2) = -4.080 BETAO (4) = 4.090

SECTION (1)RIGHT VERTICAL DEPENDENT VARIABLE CP

X/CV \ Z/BV	.1580	.3160	.6000	.8400	.9250
.000	.2918	.2065	.2319	.1427	.2206
.050	.2420	.2252	.1956	.2021	.1572
.150	.1465	.1263	.0961	.0809	.0483
.300	.0374	-.0011	-.0262	-.0582	-.0896
.520	-.1749	-.2779	-.3152	-.3457	-.2919
.685	-.3021	-.4370	-.4185	-.4513	-.3463
.775	-.2194	-.2359	-.2351	-.2308	-.1653
.900		-.1986	-.1181	-.0925	-.0928

ALPHAO(2) = 4.090 BETAO (5) = 8.150

SECTION (1)RIGHT VERTICAL DEPENDENT VARIABLE CP

X/CV \ Z/BV	.1580	.3160	.6000	.8400	.9250
.000	.0204	-.2403	-.1999	.1444	.0379
.050	.4063	.4089	.3[illegible]9	.3659	.2903
.150	.2971	.2656	.2455	.2144	.1432
.300	.1618	.1590	.0942	.0476	-.0303
.520	-.0957	-.2158	-.2308	-.3141	-.2925
.685	-.2984	-.3583	-.3152	-.4690	-.3530
.775	-.2333	-.2173	-.2487	-.3102	-.2581
.900		-.1915	-.1867	-.2490	-.2501

ALPHA 5 = -.310 BETAO (1) = -8.080

SECTION (1)RIGHT VERTICAL DEPENDENT VARIABLE CP

X/CV \ Z/BV	.1580	.3160	.6000	.8400	.9250
.000	-.0264	-.3170	-.2881	-.0592	-.0764
.050	-1.0310	-1.0000	-1.0450	-.6280	-.5330
.150	-1.1670	-.9590	-1.0350	-.6027	-.5362
.300	-.3987	-.8814	-.9856	-.5650	-.5300
.520	-.5865	-.4792	-.7630	-.4906	-.4574
.685	-.5046	-.4341	-.6029	-.4289	-.3417
.775	-.2739	-.2977	-.4655	-.3947	-.2929
.900		-.2272	-.2595	-.3316	-.2415

[illegible] RIGHT VERTICAL (RB1F35)

ALPHA([illegible]) = -.320 BETA(2) = [illegible]

SECTION ([illegible])RIGHT VERTICAL DEPENDENT VARIABLE CP

Z/BV	.1580	.3160	.6000	.8400	.9250
X/CV					
.000	.2524	.1455	.1943	.2555	.1925
.050	-.6469	.6584	-.6064	-.7766	.6985
.150	-.5065	.5637	-.5460	.7414	.6476
.500	-.2845	-.2999	.5817	.5415	-.5547
.520	.5215	-.5788	-.5427	-.4715	-.3537
.685	-.2675	-.4483	-.4565	-.4173	-.2902
.775	-.2465	-.3215	-.2739	-.2535	-.1874
.900		-.1494	-.1242	.2454	.0541

ALPHA(3) = -.330 BETA(3) = .090

SECTION (1)RIGHT VERTICAL DEPENDENT VARIABLE CP

Z/BV	.1580	.3160	.6000	.8400	.9250
X/CV					
.000	.4169	.3879	.4571	.4083	.4167
.050	-.0070	-.0475	-.1105	-.0793	-.1282
.150	-.0570	-.0795	-.1103	-.1570	-.1564
.500	-.1275	-.1374	-.1766	-.1906	-.1928
.520	-.2483	-.3285	-.4134	-.3936	-.3111
.685	-.2727	-.4506	-.4740	-.5294	-.3554
.775	-.2257	-.2767	-.2541	-.2515	-.1517
.900		-.1939	-.1016	-.0682	-.0262

ALPHA(3) = -.320 BETA(4) = 4.080

SECTION (1)RIGHT VERTICAL DEPENDENT VARIABLE CP

Z/BV	.1580	.3160	.6000	.8400	.9250
X/CV					
.000	.2516	.1623	.1725	.0789	.1559
.050	.1990	.1918	.1702	.1821	.1423
.150	.1105	.0981	.0761	.0630	.0355
.500	.0106	-.0172	-.0428	-.0665	-.0981
.520	-.1802	-.2785	-.3048	-.3287	-.2877
.685	-.2928	-.4188	-.4077	-.4199	-.3079
.775	-.2190	-.2377	-.2283	-.2194	-.1589
.900		-.1957	-.1158	-.0901	-.0875

ARC11-716 IA14 OI+T12+S12N25+AT11 RIGHT VERTICAL (RB1R35)

ALPHAO(3) = -.320 BETAO (5) = 8.130

SECTION (1)RIGHT VERTICAL DEPENDENT VARIABLE CP

Z/BV	.1580	.3160	.6000	.8400	.9250
X/CV					
.000	-.0185	-.3126	-.2797	-.2248	-.0363
.050	.5952	.5785	.5322	.5385	.2553
.150	.2684	.2434	.2271	.1977	.118[illegible]
.300	.1475	.1076	.0827	.0580	-.0445
.520	-.1047	-.2105	-.2117	-.3222	-.2846
.685	-.2971	-.5400	-.2763	-.4404	-.3510
.775	-.2232	-.2030	-.2237	-.3002	-.2499
.900		-.1842	-.1750	-.2547	-.2401

ALPHAO(4) = 4.020 BETAO (1) = -8.080

SECTION (1)RIGHT VERTICAL DEPENDENT VARIABLE CP

Z/BV	.1580	.3160	.6000	.8400	.9250
X/CV					
.000	-.0751	-.3747	-.3760	-.1607	-.1781
.050	-1.0540	-.9718	-.9864	-.6312	-.5223
.150	1.2170	-.9635	-.9843	.5363	-.5090
.300	-.4025	-.5[illegible]9	.5566	.5526	-.4798
.520	-.3501	-.4229	-.751	-.4812	-.4063
.685	-.2777	-.5564	-.5459	-.4221	-.3369
.775	-.2328	-.2557	-.3505	-.3853	-.2821
.900		-.2189	-.1983	-.3430	-.2252

ALPHAO(4) = 4.020 BETAO (2) = -4.030

SECTION (1)RIGHT VERTICAL DEPENDENT VARIABLE CP

Z/BV	.1580	.3160	.6000	.8400	.9250
X/CV					
.000	.2243	.1132	.1387	.1843	.1215
.050	-.6320	-.6507	-.6292	-.7390	-.6647
.150	-.3194	-.3186	-.5914	-.7235	-.6251
.300	-.2923	-.2735	-.4711	-.4967	-.5138
.520	-.2460	-.3513	-.4554	-.3595	-.2996
.685	-.2490	-.3884	-.4130	-.3537	-.2849
.775	-.2110	-.2205	-.2416	-.2370	-.1572
.900		-.1875	-.0964	-.0761	-.0586

AR011-710 TA14 01+012+512N25+AT11 RIGHT VERTICAL (RB1R35)

ALPHAO(4) = 4.020 BETAO (3) = .040

SECTION (1)RIGHT VERTICAL DEPENDENT VARIABLE CP

X/CV \ Z/BV	.1580	.3160	.6000	.8400	.9250
.000	.3569	.3408	.3804	.3424	.3542
.050	-.0561	-.0459	-.1062	-.0923	-.1298
.150	-.0751	-.0831	-.1067	-.1254	-.1294
.300	-.1318	-.1380	-.1690	-.1857	-.1855
.520	-.2549	-.3121	-.3935	-.3700	-.3026
.685	-.2462	-.4142	-.4276	-.4656	-.3142
.775	-.2056	-.2616	-.2279	-.2287	-.1302
.900		-.1855	-.0969	-.0546	-.0121

ALPHAO(4) = 4.010 BETAO (4) = 5.100

SECTION (1)RIGHT VERTICAL DEPENDENT VARIABLE CP

X/CV \ Z/BV	.1580	.3160	.6000	.8400	.9250
.000	.1571	-.0115	-.0259	-.1323	-.0269
.050	.2290	.2298	.2118	.2212	.1641
.150	.1345	.1227	.1136	.1016	.0501
.300	.0327	.0111	-.0036	-.0238	-.0783
.520	-.1564	-.2470	-.2640	-.2795	-.2598
.685	-.2840	-.3725	-.3388	-.3554	-.2709
.775	-.2093	-.2199	-.2033	-.2081	-.1615
.900		-.1890	-.1015	-.0966	-.1036

ALPHAO(4) = 4.000 BETAO (5) = 8.160

SECTION (1)RIGHT VERTICAL DEPENDENT VARIABLE CP

X/CV \ Z/BV	.1580	.3160	.6000	.8400	.9250
.000	-.0728	-.3891	-.3786	-.3288	-.1229
.050	.3692	.3572	.3246	.3114	.2308
.150	.2540	.2297	.2094	.1808	.0985
.300	.1373	.0978	.0781	.0322	-.0483
.520	-.1051	-.2036	-.1956	-.3017	-.2728
.685	-.2872	-.3240	-.2316	-.3970	-.3276
.775	-.2118	-.1940	-.2015	-.2822	-.2359
.900		-.1815	-.1624	-.2501	-.2232

ARC11-716 IA14 O1+T12+S12N25+AT11 RIGHT VERTICAL (RB1R35)

ALPHAO(5) = 7.930 BETAO (1) = -8.040

SECTION (1)RIGHT VERTICAL DEPENDENT VARIABLE CP

X/CV \ Z/BV	.1580	.3160	.6000	.8400	.9250
.000	-.0980	-.4366	-.4261	-.2537	-.2335
.050	-1.1000	-.9446	-.8943	-.6300	-.4830
.150	-.8286	-1.0390	-.9017	-.5932	-.4666
.300	-.4350	-.8407	-.9009	-.5488	-.4305
.520	-.3128	-.3165	-.7144	-.4673	-.3550
.685	-.2328	-.2775	-.5051	-.4028	-.3203
.775	-.2169	-.2378	-.3527	-.3857	-.2697
.900		-.2349	-.1984	-.3531	-.2191

ALPHAO(5) = 7.940 BETAO (2) = -4.000

SECTION (1)RIGHT VERTICAL DEPENDENT VARIABLE CP

X/CV \ Z/BV	.1580	.3160	.6000	.8400	.9250
.000	.2150	.0739	.0909	.1011	.0452
.050	-.6295	-.6470	-.6146	-.7226	-.6310
.150	-.2982	-.5146	-.5901	-.7191	-.6026
.300	-.2772	-.2591	-.4470	-.5120	-.4611
.520	-.2774	-.3283	-.4104	-.3501	-.2581
.685	-.2111	-.3303	-.3755	-.3348	-.2387
.775	-.1732	-.2267	-.2159	-.2137	-.1333
.900		-.1945	-.1080	-.0717	-.0403

ALPHAO(5) = 7.940 BETAO (3) = .030

SECTION (1)RIGHT VERTICAL DEPENDENT VARIABLE CP

X/CV \ Z/BV	.1580	.3160	.6000	.8400	.9250
.000	.3446	.3069	.3354	.2951	.3136
.050	-.0637	-.0546	-.1068	-.0770	-.1287
.150	-.0965	-.0933	-.1055	-.1171	-.1226
.300	-.1487	-.1442	-.1623	-.1684	-.1770
.520	-.2393	-.3054	-.3686	-.3281	-.2700
.685	-.2195	-.3930	-.3966	-.3929	-.2700
.775	-.1926	-.2498	-.2141	-.1947	-.1157
.900		-.1725	-.0841	-.0349	-.0063

AP011-718 IA14 01+T12 M2M25+AT11 RIGHT VERTICAL (PB1R35)

ALPHAO(4) = 7.930 BETAO (4) = 4.110

SECTION (1)RIGHT VERTICAL DEPENDENT VARIABLE CP

X/CV \ Z/BV	.1580	.3150	.6000	.8400	.9250
.000	.2004	.0623	.0377	-.0635	.0031
.050	.1399	.1587	.1464	.1634	.1083
.150	.0672	.0698	.0651	.0568	.0139
.300	-.0094	-.0177	-.0386	-.0512	-.1009
.520	-.1667	-.2421	-.2714	-.2938	.2557
.685	-.2590	-.3732	-.3324	-.3288	-.2497
.775	-.1916	-.2232	-.2083	-.1910	-.1407
.900		-.1996	-.1028	-.0725	-.0678

ALPHAO(5) = 7.920 BETAO (5) = 8.180

SECTION (1)RIGHT VERTICAL DEPENDENT VARIABLE CP

X/CV \ Z/BV	.1580	.3160	.6000	.8400	.9250
.000	-.1065	-.4274	-.4294	-.4200	-.1840
.050	.3289	.3296	.2895	.2948	.2104
.150	.2245	.2118	.1893	.1711	.0868
.300	.1185	.0873	.0699	.0288	-.0491
.520	-.0907	-.1858	-.1834	-.2772	-.2481
.685	-.2836	-.3389	-.2132	-.3528	-.3096
.775	-.2203	-.2041	-.1871	-.2453	-.2218
.900		-.2001	-.1311	-.2284	-.2202

ARC11-716 IA14 O1+T12+S12N25+AT11 RIGHT VERTICAL (RB1R36) (15 FEB 74)

REFERENCE DATA

SREF = 2.4210 SQ.FT. XMRP = 29.5800 INCHES
LREF = 38.7090 INCHES YMRP = .0000 INCHES
BREF = 38.7090 INCHES ZMRP = .0000 INCHES
SCALE = .0300 SCALE

PARAMETRIC DATA

MACH = .850 ELEVON = .000
RUDDER = .000 SPDBRK = .000

ALPHAO(1) = -8.120 BETAO (1) = -8.000

SECTION (1)RIGHT VERTICAL DEPENDENT VARIABLE CP

Z/BV	.1580	.3160	.6000	.8400	.9250
X/CV					
.000	.2067	.0218	.0502	.2136	.1451
.050	-.7637	-.9271	-1.0910	-.6352	-.5336
.150	-.8743	-.9541	-1.0420	-.6355	-.5505
.300	-.4118	-.9145	-1.0210	-.6083	-.5559
.520	-.5270	-.5428	-.8464	-.5392	-.4855
.685	-.3545	-.4973	-.6480	-.4756	-.3904
.775	-.3233	-.3650	-.5702	-.4557	-.3771
.900		-.2553	-.4817	-.4026	-.3473

ALPHAO(1) = -8.110 BETAO (2) = -3.970

SECTION (1)RIGHT VERTICAL DEPENDENT VARIABLE CP

Z/BV	.1580	.3160	.6000	.8400	.9250
X/CV					
.000	.4184	.3218	.3889	.4412	.3670
.050	-.4892	-.5769	-.7429	-.8610	-.8307
.150	-.2165	-.5050	-.5748	-.7911	-.7589
.300	-.2472	-.3004	-.4797	-.6157	-.6290
.520	-.3275	-.4030	-.5339	-.5026	-.4272
.685	-.3566	-.6043	-.6584	-.3916	-.3354
.775	-.2974	-.4332	-.3798	-.2527	-.2392
.900		-.2686	-.1907	-.1440	-.1578

ALPHAO(1) = -8.070 BETAO (3) = .010

SECTION (1)RIGHT VERTICAL DEPENDENT VARIABLE CP

Z/BV	.1580	.3160	.6000	.8400	.9250
X/CV					
.000	.5193	.4923	.5627	.5355	.5400
.050	.0972	-.0584	-.1683	-.0302	-.1865
.150	.0281	-.0094	-.0722	-.1056	-.1078
.300	-.0590	-.1130	-.1438	-.1794	-.2031
.520	-.2241	-.3123	-.3594	-.3832	-.3604
.685	-.3460	-.6406	-.9519	-.6374	-.5641

ARC11-716 IA14 C1+T12+S12N25+AT11 RIGHT VERTICAL (RB1R36)

ALPHAO(1) = -8.070 BETAO (3) = .010

SECTION (1)RIGHT VERTICAL DEPENDENT VARIABLE CP

Z/BV	.1580	.3160	.6000	.8400	.9250
X/CV					
.775	-.2698	-.3618	-.5298	-.4172	-.2758
.900		-.2689	-.2690	-.2445	-.1499

ALPHAO(1) = -8.080 BETAO (4) = 4.090

SECTION (1)RIGHT VERTICAL DEPENDENT VARIABLE CP

Z/BV	.1580	.3160	.6000	.8400	.9250
X/CV					
.000	.4158	.3248	.3512	.2783	.3421
.050	.2962	.2640	.1932	.2318	.1662
.150	.1947	.1757	.1336	.1025	.0774
.300	.0827	.0388	.0086	-.0391	-.1069
.520	-.1344	-.2330	-.2785	-.3365	-.3449
.685	-.3578	-.5807	-1.0450	-.8675	-.8934
.775	-.2723	-.3216	-.4567	-.5365	-.3483
.900		-.2568	-.1908	-.2136	-.1404

ALPHAO(1) = -8.100 BETAO (5) = 8.160

SECTION (1)RIGHT VERTICAL DEPENDENT VARIABLE CP

Z/BV	.1580	.3160	.6000	.8400	.9250
X/CV					
.000	.2084	.0107	.0205	-.0138	.1433
.050	.4856	.4560	.3960	.4054	.3263
.150	.3531	.3213	.2804	.2486	.2019
.300	.2204	.1578	.1331	.0731	-.0214
.520	-.0386	-.1672	-.1704	-.2887	-.3206
.685	-.3380	-.4877	-.6549	-.8927	-.8832
.775	-.2557	-.2343	-.3418	-.4885	-.4309
.900		-.2338	-.2577	-.3637	-.2744

ARC11-716 IA14 O1+T12+S12N25+AT11 RIGHT VERTICAL (RB1R36)

ALPHAO(2) = -3.980 BETAO (1) = -8.050

SECTION (1)RIGHT VERTICAL DEPENDENT VARIABLE CP

Z/BV	.1580	.3160	.6000	.8400	.9250
X/CV					
.000	.1715	-.0350	-.0410	.1148	.0566
.050	-.7803	-.9718	-1.1180	-.6150	-.5264
.150	-.8799	-1.0170	-1.0380	-.6034	-.5370
.300	-.4666	-.9602	-1.0170	-.5685	-.5406
.520	-.5862	-.5419	-.8568	-.5188	-.4877
.685	-.3439	-.4705	-.6492	-.4618	-.3987
.775	-.3021	-.3438	-.5649	-.4377	-.3744
.900		-.2609	-.4540	-.3959	-.3440

ALPHAO(2) = -3.980 BETAO (2) = -3.990

SECTION (1)RIGHT VERTICAL DEPENDENT VARIABLE CP

Z/BV	.1580	.3160	.6000	.8400	.9250
X/CV					
.000	.3588	.2679	.3139	.3694	.2929
.050	-.5452	-.6576	-.7204	-.7954	-.7912
.150	-.2767	-.5561	-.6044	-.7705	-.7344
.300	-.2985	-.2926	-.5093	-.6016	-.6728
.520	-.3311	-.3932	-.5348	-.4652	-.4406
.685	-.3306	-.5590	-.6504	-.3827	-.3217
.775	-.2870	-.4184	-.3713	-.2400	-.2255
.900		-.2616	-.1541	-.1242	-.1358

ALPHAO(2) = -3.990 BETAO (3) = .060

SECTION (1)RIGHT VERTICAL DEPENDENT VARIABLE CP

Z/BV	.1580	.3160	.6000	.8400	.9250
X/CV					
.000	.4257	.4317	.4903	.4568	.4686
.050	.0521	-.1023	-.1704	-.0450	-.1247
.150	-.0294	-.0427	-.0847	.1223	-.1029
.300	-.0952	-.1314	-.1540	-.1945	-.2147
.520	-.2416	-.3185	-.3651	-.3992	-.3733
.685	-.3164	-.5842	-.8320	-.5993	-.4821
.775	-.2545	-.3315	-.4352	-.3848	-.2374
.900		-.2680	-.1953	-.2041	-.1026

AR311-718 TA14 O1+T12+S12N25+AT11 RIGHT VERTICAL (RB1R36)

ALPHAO (1) = -5.990 BETAO (4) = 4.070

SECTION (1)RIGHT VERTICAL DEPENDENT VARIABLE CP

X/CV \ Z/BV	.1580	.3160	.6000	.8400	.9250
.000	.3528	.2589	.2691	.1897	.2570
.050	.2419	.2214	.1606	.1981	.1436
.150	.1462	.1375	.1054	.0779	.0611
.300	.0451	.0074	-.0181	-.0614	-.1228
.520	-.1541	-.2466	-.2786	-.3505	-.3489
.685	-.3313	-.5619	-.8089	-.6415	-.5417
.775	-.2462	-.2818	-.3725	-.3755	-.2670
.900		-.2466	-.1674	-.1438	-.1064

ALPHAO(2) = -4.000 BETAO (5) = 8.110

SECTION (1)RIGHT VERTICAL DEPENDENT VARIABLE CP

X/CV \ Z/BV	.1580	.3160	.6000	.8400	.9250
.000	.1620	-.0384	-.0755	-.0858	.0596
.050	.4348	.4068	.3470	.3600	.2908
.150	.3071	.2831	.2443	.2159	.1733
.300	.1899	.1294	.1072	.0432	-.0437
.520	-.0821	-.1818	-.1900	-.3063	-.3395
.685	-.3297	-.4620	-.5675	-.6259	-.7509
.775	-.2552	-.2398	-.3125	-.4529	-.3995
.900		-.2399	-.2426	-.3625	-.2949

ALPHAO(3) = -.310 BETAO (1) = -8.050

SECTION (1)RIGHT VERTICAL DEPENDENT VARIABLE CP

X/CV \ Z/BV	.1580	.3160	.6000	.8400	.9250
.000	.1302	-.0984	-.1385	.0145	-.0331
.050	-.9125	-1.0300	-1.0730	-.8054	-.5256
.150	-.9291	-1.0810	-1.0250	-.5928	-.5243
.300	-.5116	-.9874	-1.0190	-.5619	-.3149
.520	-.5132	-.4814	-.8648	-.5080	-.4727
.685	-.3111	-.4391	-.6607	-.4482	-.3906
.775	-.2723	-.3161	-.5513	-.4292	-.3621
.900		-.2420	-.4103	-.4000	-.3289

ARC11-716 IA14 O1+T12+S12N25+AT11 RIGHT VERTICAL (RB1R36)

ALPHAO(3) = -.320 BETAO (2) = -3.990

SECTION (1)RIGHT VERTICAL DEPENDENT VARIABLE CP

Z/BV	.1580	.3160	.6000	.8400	.9250
X/CV					
.000	.3010	.2029	.2498	.2852	.2151
.050	-.5925	-.6683	-.7026	-.8055	-.7623
.150	-.3120	-.5829	-.6343	-.8029	-.6976
.300	-.3153	-.2852	-.5375	-.6357	-.6776
.520	-.3239	-.3831	-.5085	-.4553	-.4327
.685	-.3027	-.5076	-.5668	-.4014	-.3085
.775	-.2627	-.3742	-.3255	-.2385	-.2133
.900		-.2327	-.1417	-.1101	-.1163

ALPHAO(3) = -.330 BETAO (3) = .040

SECTION (1)RIGHT VERTICAL DEPENDENT VARIABLE CP

Z/BV	.1580	.3160	.6000	.8400	.9250
X/CV					
.000	.3511	.3758	.4385	.4019	.4112
.050	-.0001	-.1337	-.1905	-.0613	-.1328
.150	-.0677	-.0688	-.1072	-.1257	-.1119
.300	-.1286	-.1539	-.1672	-.2019	-.2195
.520	-.2457	-.3245	-.3761	-.4042	-.3696
.685	-.2894	-.5221	-.7312	-.5353	-.4175
.775	-.2338	-.3219	-.3929	-.3531	-.2009
.900		-.2498	-.1645	-.1475	-.0710

ALPHAO(3) = -.330 BETAO (4) = 8.130

SECTION (1)RIGHT VERTICAL DEPENDENT VARIABLE CP

Z/BV	.1580	.3160	.6000	.8400	.9250
X/CV					
.000	.1246	-.0970	-.1594	-.1854	-.0294
.050	.3996	.3750	.3130	.3328	.2583
.150	.2711	.2521	.2215	.1917	.1404
.300	.1621	.1029	.0859	.0374	-.0669
.520	-.0703	-.1884	-.1980	-.3057	-.3294
.685	-.3271	-.4480	-.4858	-.5341	-.6763
.775	-.2539	-.2348	-.2633	-.3978	-.3765
.900		-.2428	-.2272	-.3662	-.2833

[illegible] RIGHT VERTICAL (RB1R56)

ALPHAO(4) = 3.810 BETAO (1) = -4.010

SECTION (1)RIGHT VERTICAL DEPENDENT VARIABLE CP

Z/BV	.1580	.3160	.6000	.8400	.9250
X/CV					
.000	.2676	.1375	.1763	.1963	.1329
.050	-.6052	-.6847	-.6871	-.7598	-.7289
.150	-.3717	-.5909	-.6457	-.7813	-.6670
.300	-.3275	-.2890	-.5618	-.6430	-.6701
.520	-.3079	-.3880	-.4686	-.4086	-.4070
.685	-.2511	-.4321	-.4983	-.3678	-.2721
.775	-.2302	-.3055	-.2713	-.2046	-.1792
.900		-.2308	-.1226	-.0755	-.0876

ALPHAO(4) = 3.810 BETAO (2) = .040

SECTION (1)RIGHT VERTICAL DEPENDENT VARIABLE CP

Z/BV	.1580	.3160	.6000	.8400	.9250
X/CV					
.030	.3408	.3433	.3863	.3428	.3521
.090	-.0612	-.1095	-.1785	-.0789	-.1574
.190	-.0954	-.0874	-.1072	-.1326	-.1108
.300	-.1468	-.1537	-.1697	-.2061	-.2351
.520	-.2424	-.3002	-.3671	-.3944	-.3511
.685	-.2684	-.4856	-.6723	-.4780	-.3855
.775	-.2277	-.3017	-.3824	-.2923	-.1697
.900		-.2301	-.1155	-.1076	-.0474

ALPHAO(4) = 3.800 BETAO (3) = 4.090

SECTION (1)RIGHT VERTICAL DEPENDENT VARIABLE CP

Z/BV	.1580	.3160	.6000	.8400	.9250
X/CV					
.000	.2455	.1391	.1304	.0218	.0899
.090	.1612	.1670	.1089	.1824	.1039
.190	.0840	.0872	.0740	.0486	.0220
.300	.0051	-.0137	-.0386	-.0875	-.1373
.520	-.1543	-.2502	-.2700	-.3531	-.3091
.685	-.3022	-.4847	-.5910	-.4664	-.3597
.775	-.2240	-.2622	-.2849	-.2944	-.1784
.900		-.2347	-.1350	-.1182	-.0783

ORIGINAL PAGE IS OF POOR QUALITY

ARC11-716 IA14 OI+T12+S12N25+AT11 RIGHT VERTICAL (RB1R36)

ALPHAO(4) = 3.780 BETAO (4) = 8.180

SECTION (1)RIGHT VERTICAL DEPENDENT VARIABLE CP

Z/BV	.1580	.3160	.6000	.8400	.9250
X/CV					
.000	.0840	-.1757	-.2685	-.2082	-.1179
.050	.3660	.3483	.2780	.3062	.2311
.150	.2551	.2405	.1963	.1774	.1316
.300	.1528	.0969	.0664	.0281	-.0898
.520	-.0793	-.1953	-.2068	-.3010	-.3109
.685	-.3134	-.4114	-.4077	-.4795	-.5821
.775	-.2355	-.2293	-.2509	-.3770	-.5031
.900		-.2195	-.1801	-.3573	-.2713

ALPHAO(5) = 7.940 BETAO (1) = .030

SECTION (1)RIGHT VERTICAL DEPENDENT VARIABLE CP

Z/BV	.1580	.3160	.6000	.8400	.9250
X/CV					
.000	.3158	.2973	.3404	.2845	.2918
.050	-.1091	-.1104	-.1893	-.0908	-.1618
.150	-.1210	-.0990	-.1113	-.1426	-.1105
.300	-.1569	-.1684	-.1707	-.2072	-.2219
.520	-.2488	-.3068	-.3592	-.3902	-.3094
.685	-.2477	-.4403	-.6073	-.4443	-.3195
.775	-.2103	-.2806	-.3092	-.2448	-.1375
.900		-.2244	-.1068	-.0844	-.0128

ALPHAO(5) = 7.930 BETAO (2) = 4.130

SECTION (1)RIGHT VERTICAL DEPENDENT VARIABLE CP

Z/BV	.1580	.3160	.6000	.8400	.9250
X/CV					
.000	.1977	.0979	.0577	-.0520	.0005
.050	.0898	.1456	.1033	.1478	.0907
.150	.0258	.0817	.0634	.0373	.0188
.300	-.0241	-.0263	-.0373	-.0763	-.1436
.520	-.1650	-.2343	-.2685	-.3227	-.2911
.685	-.2801	-.4478	-.5222	-.3887	-.3285
.775	-.2066	-.2552	-.2495	-.2533	-.1672
.900		-.2328	-.1259	-.0985	-.0599

[illegible] (RB1036)

[illegible] BETA [illegible]

[illegible] [illegible] [illegible] [illegible]

Y/CV	.1500	.3150	.6000	.8450	[illegible]
X/CV					
.000	.0116	-.2557	.3540	-.3837	.1635
.150	.2941	.3116	.2498	.2826	.2070
.350	.1969	.2091	.1925	.1720	.1122
.500	.0471	.0822	.0610	.0255	-.0816
.620	-.0903	-.1849	-.2120	-.2048	-.2986
.695	-.3060	-.4087	-.3254	-.4073	-.4073
.775	-.2459	-.2433	-.2468	-.2891	-.2355
.900		-.2457	-.1615	-.2589	-.2484

ORIGINAL PAGE IS OF POOR QUALITY

ARC11-716 IA14 O1+T12+S12N25+AT11 RIGHT VERTICAL (RB1R37) (15 FEB 74)

REFERENCE DATA

SREF = 2.4210 SQ.FT. XMRP = 29.5800 INCHES
LREF = 38.7090 INCHES YMRP = .0000 INCHES
BREF = 38.7090 INCHES ZMRP = .0000 INCHES
SCALE = .0300 SCALE

PARAMETRIC DATA

MACH = .950 ELEVON = .000
RUDDER = .000 SPDBRK = .000

ALPHAO(1) = -8.060 BETAO (1) = -3.980

SECTION (1)RIGHT VERTICAL DEPENDENT VARIABLE CP

Z/BV	.1580	.3160	.6000	.8400	.9250
X/CV					
.000	.4831	.4159	.4567	.4865	.4204
.050	-.3279	-.5405	-.7549	-1.0660	-1.1300
.150	-.1101	-.3822	-.5378	-.7449	-1.0290
.300	-.2544	-.2633	-.4405	-.5116	-.4096
.520	-.2961	-.3590	-.4248	-.4571	-.3337
.685	-.5014	-.7429	-.9275	-.9114	-.9778
.775	-.3764	-.5255	-.8281	-.8805	-.9574
.900		-.4888	-.4568	-.5244	-.4951

ALPHAO(1) = -8.050 BETAO (2) = .040

SECTION (1)RIGHT VERTICAL DEPENDENT VARIABLE CP

Z/BV	.1580	.3160	.6000	.8400	.9250
X/CV					
.000	.5174	.9039	.5794	.5505	.5585
.050	.1285	-.1491	-.2083	-.1114	-.2441
.150	.0363	.0122	-.0184	-.0527	-.0923
.300	-.0409	-.0542	-.0836	-.1153	-.1339
.520	-.1445	-.2261	-.2546	-.2700	-.3105
.685	-.4441	-.8172	-1.0110	-.9725	-.9645
.775	-.3385	-.5058	-.9685	-.9725	-.9110
.900		-.3866	-.5072	-.6354	-.4140

ALPHAO(1) = -8.070 BETAO (3) = 4.090

SECTION (1)RIGHT VERTICAL DEPENDENT VARIABLE CP

Z/BV	.1580	.3160	.6000	.8400	.9250
X/CV					
.000	.4733	.4252	.4103	.3478	.4042
.050	.3301	.2820	.2542	.2687	.2166
.150	.2322	.2084	.1780	.1622	.1141
.300	.1346	.0940	.0723	.0322	-.0388
.520	-.0366	-.1230	-.1732	-.2270	-.3195
.685	-.3813	-.7672	-.9803	-.9351	-.9525

[illegible] RIGHT VERTICAL (RB1R37)

ALPHA [illegible] BETA [illegible]

SECTION [illegible] RIGHT VERTICAL DEPENDENT VARIABLE [illegible]

Z/BV	.1580	.3160	.6000	.8400	.9250
X/CV					
[illegible]	-.3156	-.4155	-.8921	-.9123	[illegible]
[illegible]		-.5018	-.6401	-.8736	-.4517

ALPHA(1) = -8.100 BETA(4) = [illegible]

SECTION (1)RIGHT VERTICAL DEPENDENT VARIABLE CP

Z/BV	.1580	.3160	.6000	.8400	.9250
X/CV					
.000	.3261	.1881	.1898	.1059	.2034
.050	.3293	.4918	.4370	.4266	.3604
.150	.3984	.3873	.3192	.2873	.2253
.370	.2779	.2198	.1839	.1329	.0451
.520	.0577	-.0578	-.0746	-.1723	-.3090
.645	-.3590	-.5729	-.9192	-.8922	-.9044
.775	-.3277	-.5598	-.7895	-.8526	-.8837
.900		-.2268	-.5214	-.8066	-.9618

ALPHA(2) = -6.080 BETA(1) = -8.040

SECTION (1)RIGHT VERTICAL DEPENDENT VARIABLE CP

Z/BV	.1580	.3160	.6000	.8400	.9250
X/CV					
.000	.2929	.1367	.1325	.1869	.0887
.090	-.5778	-.7908	-1.0290	-1.0150	-.9293
.190	-.6515	-.7810	-.9940	-1.0300	-.9156
.300	-.5271	-.7293	-.9581	-.9409	-.8304
.520	-.4940	-.5763	-.9038	-.7318	-.7070
.645	-.5066	-.6590	-.8799	-.6555	-.6038
.775	-.3168	-.6021	-.7734	-.6274	-.5678
.900		-.4332	-.6469	-.6220	-.5211

ARC11-716 IA14 O6+T12+S12N25+AT11 RIGHT VERTICAL (RB1R37)

ALPHAO(2) = -4.080 BETAO (2) = -4.020

SECTION (1)RIGHT VERTICAL DEPENDENT VARIABLE CP

Z/BV	.1580	.3160	.6000	.8400	.9250
X/CV					
.000	.4115	.3467	.3687	.3987	.3240
.090	-.3855	-.5096	-.8165	-.9985	-.9870
.150	-.1621	-.3976	-.6339	-.7842	-.8818
.300	-.3050	-.3444	-.4862	-.5981	-.6157
.520	-.3629	-.3887	-.4357	-.4920	-.4550
.685	-.4672	-.6233	-.9802	-.8870	-.7551
.775	-.3245	-.4984	-.6062	-.5815	-.5141
.900		-.4421	-.4556	-.4618	-.3713

ALPHAO(2) = -4.080 BETAO (3) = .010

SECTION (1)RIGHT VERTICAL DEPENDENT VARIABLE CP

Z/BV	.1580	.3160	.6000	.8400	.9250
X/CV					
.000	.4343	.4052	.4590	.4590	.4709
.090	.0663	-.2578	-.2492	-.1583	-.2367
.150	-.0408	-.0832	-.0706	-.1036	-.0983
.300	-.1632	-.1082	-.1508	-.1606	-.1677
.520	.1884	-.2651	-.3051	-.2987	-.3432
.685	-.4378	-.7811	-1.0270	-.9727	-.9302
.775	-.3278	-.4929	-.9791	-.8545	-.6855
.900		-.3855	-.4837	-.4640	-.3515

ALPHAO(2) = -4.090 BETAO (4) = 4.070

SECTION (1)RIGHT VERTICAL DEPENDENT VARIABLE CP

Z/BV	.1580	.3160	.6000	.8400	.9250
X/CV					
.000	.4074	.3805	.3509	.2546	[illegible]
.090	.2486	.2074	.1931	.2195	.1680
.150	.1490	.1382	.1235	.1153	.0678
.300	.0601	.0436	.0209	-.0199	-.0854
.520	-.0462	-.1547	-.1973	-.2665	-.3678
.685	-.4808	-.7380	-.8781	-.9428	-.9863
.775	-.3202	-.4181	-.9067	-.9351	-.9730
.900		-.3209	-.4605	-.0946	-.4327

AR(11)716 (A14 [illegible]+T12+S12N63+AT11 RIGHT VERTICAL (RB1R37)

ALPHAO([illegible]) = -4.110 BETAO (5) = 8.110

SECTION (1)RIGHT VERTICAL DEPENDENT VARIABLE CP

Z/BV	.1580	.3160	.6000	.8400	.9250
X/CV					
.000	.2893	.1452	.1093	.0200	.1052
.050	.4644	.4296	.3785	.3753	.3123
.150	.3409	.3148	.2664	.2449	.1830
.300	.2284	.1800	.1383	.0983	.0068
.520	.0270	-.0823	-.1100	-.1981	-.5423
.685	-.3589	-.5973	-.9280	-.8797	-.9208
.775	-.3067	-.3648	-.6398	-.8662	-.9114
.900		-.2354	-.3015	-.6765	-.8640

ALPHAO(3) = -.310 BETAO (1) = -8.040

SECTION (1)RIGHT VERTICAL DEPENDENT VARIABLE CP

Z/BV	.1580	.3160	.6000	.8400	.9250
X/CV					
.000	.2575	.0975	.0569	.0868	-.0085
.050	-.5889	-.7783	-1.0460	-1.0220	-.8711
.150	-.6709	-.8224	-1.0260	-1.0140	-.8747
.300	-.3696	-.7303	-.9676	-.9043	-.8044
.520	-.5410	-.5928	-.9156	-.7301	-.6834
.685	-.4578	-.6245	-.8459	-.6492	-.5796
.775	-.3039	-.5865	-.7585	-.6234	-.5321
.900		-.3851	-.5908	-.6105	-.4910

ALPHAO(3) = -.320 BETAO (2) = -4.000

SECTION (1)RIGHT VERTICAL DEPENDENT VARIABLE CP

Z/BV	.1580	.3160	.6000	.8400	.9250
X/CV					
.000	.3614	.2775	.2956	.3135	.2508
.050	-.4191	-.6379	-.8392	-.9377	-.9081
.150	-.2208	-.4050	-.6900	-.8128	-.8567
.300	-.3593	-.4123	-.4874	-.6016	-.6857
.520	-.4193	-.4327	-.4630	-.4808	-.4990
.685	-.4355	-.5830	-.9781	-.6378	-.5437
.775	-.3175	-.5400	-.5467	-.4695	-.4048
.900		-.3985	-.4207	-.3699	-.3464

ARC11-716 IA14 O1+T12+S12N25+AT11 RIGHT VERTICAL (RB1R37)

ALPHAO(3) = -.320 BETAO (3) = .040

SECTION (1)RIGHT VERTICAL DEPENDENT VARIABLE CP

Z/BV	.1580	.3160	.6000	.8400	.9250
X/CV					
.000	.3993	.3330	.4175	.3667	.3932
.050	.0177	-.3248	-.2910	-.1690	-.2305
.150	-.0947	-.1758	-.1146	-.1407	-.1262
.300	-.2310	-.2094	-.1752	-.1909	-.2225
.520	-.2557	-.2954	-.3395	-.3391	-.3859
.685	-.4164	-.7123	-1.0340	-.9177	-.7584
.775	-.3184	-.4529	-.8338	-.6372	-.3931
.900		-.4141	-.4887	-.4223	-.2621

ALPHAO(3) = -.320 BETAO (4) = 4.090

SECTION (1)RIGHT VERTICAL DEPENDENT VARIABLE CP

Z/BV	.1580	.3160	.6000	.8400	.9250
X/CV					
.000	.3498	.2903	.2531	.1648	.2226
.050	.1718	.1180	.1365	.1778	.1299
.150	.0643	.0623	.0745	.0770	.0382
.300	-.0148	-.0155	-.0221	-.0421	-.1192
.520	-.1233	-.1819	-.2241	-.2915	-.3959
.685	-.4109	-.7146	-.9864	-.9243	-.9704
.775	-.3036	-.4114	-.8657	-.9499	-.9943
.900		-.2989	-.3993	-.5750	-.4042

ALPHAO(3) = -.330 BETAO (5) = 8.130

SECTION (1)RIGHT VERTICAL DEPENDENT VARIABLE CP

Z/BV	.1580	.3160	.6000	.8400	.9250
X/CV					
.000	.2405	.1021	.0239	-.0867	.0110
.050	.4091	.3846	.3305	.3272	.2664
.150	.2909	.2742	.2269	.2103	.1501
.300	.1909	.1472	.1045	.0672	-.0279
.520	.0072	-.1027	-.1399	-.2207	-.3677
.685	-.3731	-.5815	-.9214	-.8706	-.9280
.775	-.3049	-.3535	-.4424	-.8574	-.9203
.900		-.2390	-.2803	-.5150	-.6041

A 11-71E 1A14 3(*T12,5G12.5,*A(1: RIGHT VERTICAL (RB1F37)

ALPHAO = 4.030 BETAO (1) = 8.050

SECTION (1)RIGHT VERTICAL DEPENDENT VARIABLE CP

Z/BV	.1580	.3160	.6000	.8400	.9250
X/CV					
.000	.1996	.0475	-.0275	-.0267	-.1248
.050	-.6304	-.7997	-1.0670	-1.0099	-.9606
.150	-.7125	-.8551	-1.0590	-.9968	-.8714
.300	-.4271	-.7414	-1.0010	-.8838	-.7635
.520	-.5472	-.5828	-.9163	-.7105	-.6671
.685	-.3686	-.5838	-.8221	-.6535	-.5914
.775	-.2731	-.5041	-.7255	-.6466	-.5225
.900		-.3060	-.4545	-.5958	-.4972

ALPHAO(4) = 4.030 BETAO (2) = -4.010

SECTION (1)RIGHT VERTICAL DEPENDENT VARIABLE CP

Z/BV	.1580	.3160	.6000	.8400	.9250
X/CV					
.000	.3131	.1958	.2028	.2095	.1469
.050	-.4358	-.7196	-.8787	-.8742	-.8460
.150	-.2832	-.4684	-.7488	-.8511	-.8356
.300	-.4229	-.4682	-.5056	-.6885	-.7601
.520	-.4730	-.4440	-.4604	-.5140	-.5380
.685	-.3708	-.5043	-.7958	-.4407	-.4125
.775	-.2862	-.4391	-.5412	-.3321	-.3395
.900		-.3482	-.2853	-.2853	-.3007

ALPHAO(4) = 4.020 BETAO (3) = .030

SECTION (1)RIGHT VERTICAL DEPENDENT VARIABLE CP

Z/BV	.1580	.3160	.6000	.8400	.9250
X/CV					
.000	.3700	.2748	.3104	.2737	.3000
.050	-.0647	-.4022	-.4214	-.2640	-.3107
.150	-.1549	-.2377	-.1949	-.2039	-.1742
.300	-.2900	-.2944	-.2593	-.2513	-.2761
.520	-.3348	-.3535	-.3890	-.3825	-.4214
.685	-.3728	-.5834	-1.0490	-.7512	-.5214
.775	-.3081	-.4447	-.6113	-.4860	-.3024
.900		-.3792	-.4274	-.3367	-.2207

ORIGINAL PAGE IS OF POOR QUALITY

ARC11-716 IA14 O1+T12+S12N25+AT11 RIGHT VERTICAL (RB1R37)

ALPHAO(4) = 4.020 BETAO (4) = 4.100

SECTION (1)RIGHT VERTICAL DEPENDENT VARIABLE CP

Z/BV	.1580	.3160	.6000	.8400	.9250
X/CV					
.000	.3024	.2271	.1764	.0754	.1305
.050	.0906	.0122	.0602	.1320	.0884
.150	-.0385	-.0322	.0167	.0387	.0021
.300	-.1235	-.1091	-.0590	-.0677	-.1492
.520	-.2145	-.1999	-.2490	-.3065	-.4093
.685	-.3939	-.6545	-.9817	-.8890	-.9397
.775	-.2924	-.3904	-.6327	-.9248	-.6104
.900		-.2814	-.3156	-.4145	-.3583

ALPHAO(4) = 4.010 BETAO (5) = 8.140

SECTION (1)RIGHT VERTICAL DEPENDENT VARIABLE CP

Z/BV	.1580	.3160	.6000	.8400	.9250
X/CV					
.000	.1807	.0601	-.0633	-.1947	-.1059
.050	.3281	.3212	.2760	.2741	.2169
.150	.2265	.2233	.1827	.1596	.1102
.300	.1466	.1083	.0669	.0295	-.0650
.520	-.0239	-.1209	-.1748	-.2428	-.3995
.685	-.3818	-.5671	-.9101	-.8651	-.9245
.775	-.3108	-.3576	-.3899	-.7478	-.8778
.900		-.2472	-.2799	-.4466	-.4099

ALPHAO(5) = 7.940 BETAO (1) = -8.030

SECTION (1)RIGHT VERTICAL DEPENDENT VARIABLE CP

Z/BV	.1580	.3160	.6000	.8400	.9250
X/CV					
.000	.1395	-.0188	-.1094	-.1384	-.2350
.050	-.6092	-.8762	-1.0600	-.8822	-.6931
.150	-.3717	-.8865	-1.0570	-.8360	-.7016
.300	-.5335	-.6816	-1.0130	-.7545	-.6442
.520	-.5414	-.4312	-.8840	-.6860	-.5862
.685	-.3599	-.3230	-.6854	-.6348	-.5292
.775	-.2706	-.3137	-.4876	-.6523	-.5072
.900		-.2873	-.2391	-.5497	-.4930

[illegible] 2N25+AT11 RIGHT VERTICAL (RB1P37)

[illegible] 7.940 BETAO (2) = 4.010

SECTION (1)RIGHT VERTICAL DEPENDENT VARIABLE CP

Z/BV	.1580	.3160	.6000	.8400	.9250
X/CV					
.000	.2379	.1381	.1577	.1151	.0438
.050	-.2481	-.7235	-.8887	-.8553	-.8353
.150	-.2597	-.4659	-.7904	-.9675	-.9165
.300	-.4235	-.4838	-.5313	-.7410	-.7884
.520	-.4717	-.4345	-.4775	-.5325	-.5107
.685	-.3479	-.4358	-.6266	-.3246	-.3329
.775	-.2686	-.3763	-.3608	-.2420	-.2720
.900		-.2990	-.2368	-.1937	-.2057

ALPHAO(5) = 7.940 BETAO (3) = .040

SECTION (1)RIGHT VERTICAL DEPENDENT VARIABLE CP

Z/BV	.1580	.3160	.6000	.8400	.9250
X/CV					
.000	.2834	.2067	.2117	.2105	.2505
.050	-.1380	-.3617	-.4801	-.2353	-.2073
.150	-.2030	-.2954	-.2629	-.1542	-.1367
.300	-.3409	-.3546	-.2717	-.2046	-.2340
.520	-.3735	-.3539	-.3456	-.3633	-.3669
.685	-.3255	-.4477	-.7467	-.5232	-.3061
.775	-.2852	-.3888	-.4969	-.3466	-.2182
.900		-.2922	-.2328	-.2755	-.1161

ALPHAO(5) = 7.930 BETAO (4) = 4.110

SECTION (1)RIGHT VERTICAL DEPENDENT VARIABLE CP

Z/BV	.1580	.3160	.6000	.8400	.9250
X/CV					
.000	.2076	.1807	.1086	-.0166	.0287
.050	-.0905	-.0470	.0630	.1111	.0807
.150	-.1906	-.0568	.0159	.0234	-.0063
.300	-.1812	-.1066	-.0615	-.0835	-.1644
.520	-.2168	-.2155	-.2480	-.3049	-.4069
.685	-.3569	-.6405	-.9665	-.8464	-.8093
.775	-.2742	-.3816	-.4668	-.7414	-.5460
.900		-.2841	-.2973	-.3243	-.3432

ARC11-716 IA14 O1+T12+S12N25+AT11 RIGHT VERTICAL (RB1R37)

ALPHAO(5) = 7.920 BETAO (5) = 8.180

SECTION (1)RIGHT VERTICAL DEPENDENT VARIABLE CP

Z/BV	.1580	.3160	.6000	.8400	.9250
X/CV					
.000	.1032	-.0108	-.1684	-.3259	-.2222
.050	.1673	.2773	.2429	.2364	.1843
.150	.1214	.1834	.1570	.1302	.0851
.300	.0880	.0791	.0464	.0067	-.0859
.520	-.0708	-.1254	-.1969	-.2576	-.4209
.685	-.3718	-.6394	-.8394	-.8449	-.9923
.775	-.2961	-.3366	-.3511	-.4937	-.6333
.900		-.2721	-.2737	-.3969	-.3556

ARC11-716 IA14 OL+S12+S12N25+AT11 RIGHT VERTICAL (RB1R38) (15 FEB 74)

REFERENCE DATA

SREF = 2.4210 SQ FT. XMRP = 29.5870 INCHES
CREF = 38.7090 INCHES YMRP = .0000 INCHES
BREF = 38.7090 INCHES ZMRP = .0000 INCHES
SCALE = .0300 SCALE

PARAMETRIC DATA

MACH = 1.050 ELEVON = .000
RUDDER = .000 SPOBRK = .000

ALPHAO(1) = -8.080 BETAO (1) = -8.020

SECTION (1)RIGHT VERTICAL DEPENDENT VARIABLE CP

Z/BV	.1580	.3160	.6000	.8400	.9250
X/CV					
.000	.4335	.3155	.3447	.4086	.3177
.050	.3720	-.5349	-.7616	-.0805	-1.0000
.150	-.4719	-.5546	-.7407	-.8311	-.9322
.300	-.1078	-.5054	-.6914	-.7503	-.7268
.520	-.2582	-.3877	-.6835	-.7057	-.5714
.685	-.5496	-.7465	-.9180	-.6188	-.6548
.775	-.4191	-.5938	-.7937	-.5776	-.5161
.900		-.5299	-.5965	-.5480	-.4831

ALPHAO(1) = -8.070 BETAO (2) = -4.980

SECTION (1)RIGHT VERTICAL DEPENDENT VARIABLE CP

Z/BV	.1580	.3160	.6000	.8400	.9250
X/CV					
.000	.5423	.4748	.5101	.5586	.4795
.050	-.2244	-.4172	-.6634	-.9296	-.9541
.150	-.0776	-.3900	-.5335	-.7273	-.8401
.300	-.1188	-.2285	-.4245	-.4559	-.6155
.520	-.1859	-.2269	-.3578	-.3936	-.2847
.685	-.4968	-.8028	-.7788	-.8104	-.7998
.775	-.3829	-.5570	-.7780	-.8088	-.8027
.900		-.4652	-.5455	-.6728	-.7541

ALPHAO(1) = -8.080 BETAO (3) = .030

SECTION (1)RIGHT VERTICAL DEPENDENT VARIABLE CP

Z/BV	.1580	.3160	.6000	.8400	.9250
X/CV					
.000	.5970	.5793	.6582	.6330	.6408
.050	.2218	-.0806	-.1150	-.0989	-.1586
.150	.1491	.0837	.1000	.0723	.0911
.300	.0320	.0249	.0490	.0084	-.0022
.520	-.0300	-.0742	-.1287	-.1154	-.1504
.685	-.4248	-.7572	-.7837	-.7476	-.7444

ORIGINAL PAGE IS OF POOR QUALITY

ARC11-716 IA14 O1+T12+S12N25+AT11 RIGHT VERTICAL (RB1R38)

ALPHAO(1) = -8.080 BETAO (3) = .030

SECTION (1)RIGHT VERTICAL DEPENDENT VARIABLE CP

Z/BV	.1580	.3160	.6000	.8400	.9250
X/CV					
.775	-.3574	-.5675	-.7450	-.7403	-.7404
.900		-.4305	-.7100	-.7497	-.7114

ALPHAO(1) = -8.070 BETAO (4) = 4.120

SECTION (1)RIGHT VERTICAL DEPENDENT VARIABLE CP

Z/BV	.1580	.3160	.6000	.8400	.9250
X/CV					
.000	.5591	.5287	.5213	.4618	.5084
.050	.4245	.3722	.3460	.3673	.3242
.150	.3246	.3022	.2816	.2767	.2486
.300	.2367	.1993	.1795	.1625	.0966
.520	.0830	.0166	-.0192	-.0658	-.1536
.685	-.4351	-.6993	-.7309	-.7197	-.7308
.775	-.3475	-.5312	-.6774	-.6870	-.7345
.900		-.3568	-.5994	-.6899	-.7319

ALPHAO(1) = -8.100 BETAO (5) = 8.160

SECTION (1)RIGHT VERTICAL DEPENDENT VARIABLE CP

Z/BV	.1580	.3160	.6000	.8400	.9250
X/CV					
.000	.4316	.3162	.3113	.2449	.3200
.050	.6237	.5853	.5319	.5205	.4651
.150	.3005	.4702	.4263	.4034	.3559
.300	.3861	.3297	.3016	.2611	.1767
.520	.1886	.0886	.0735	-.0218	-.1451
.685	-.3482	-.6317	-.6837	-.6877	-.7097
.775	-.3265	-.3920	-.6034	-.6308	-.6817
.900		-.3299	-.4847	-.6023	-.6693

ARC1 7.6 014 O1+T12+S.2N25+AT11 RIGHT VERTICAL (RB1R38)

ALPHA ( ) = -4.090 BETAO (1) = -8.040

SECTION (1)RIGHT VERTICAL DEPENDENT VARIABLE CP

Z/BV	.1580	.3160	.6000	.8400	.9250
X/CV					
.000	.4041	.2836	.2793	.3191	.2308
.050	-.3817	-.5531	-.7897	-.8815	-.9876
.150	-.4790	-.5903	-.7784	-.8528	-.9376
.300	-.1546	-.5159	-.7155	-.7670	-.7580
.520	-.3124	-.4028	-.6881	-.7126	-.5842
.685	-.5435	-.7070	-.9081	-.5069	-.5781
.775	-.5914	-.5703	-.7562	-.5716	-.5078
.900		-.5206	-.5759	-.5651	-.4661

ALPHAO(2) = -4.090 BETAO (2) = -4.020

SECTION (1)RIGHT VERTICAL DEPENDENT VARIABLE CP

Z/BV	.1580	.3160	.6000	.8400	.9250
X/CV					
.000	.5162	.4521	.4784	.4975	.4498
.050	-.2159	-.4331	-.6516	-.8733	-.8923
.150	-.0315	-.2389	-.4647	-.6152	-.8402
.300	-.1515	-.2196	-.3144	-.3210	-.2671
.520	-.2131	-.2506	-.2913	-.3200	-.2240
.685	-.4795	-.7739	-.7931	-.7596	-.7822
.775	-.5650	-.5198	-.8027	-.7826	-.7922
.900		-.4697	-.4471	-.6832	-.7488

ALPHAO(2) = -4.090 BETAO (3) = .040

SECTION (1)RIGHT VERTICAL DEPENDENT VARIABLE CP

Z/BV	.1580	.3160	.6000	.8400	.9250
X/CV					
.000	.5563	.5115	.5657	.5506	.5622
.050	.1763	-.1276	-.1490	-.0801	-.1140
.150	.1017	.0262	.0619	.0349	.0612
.300	-.0237	-.0468	.0050	-.0274	-.0383
.520	-.0886	-.1074	-.1648	-.1460	-.1820
.685	-.4204	-.7650	-.7882	-.7553	-.7588
.775	-.3421	-.5257	-.7562	-.7534	-.7606
.900		-.4049	-.7212	-.7639	-.7435

ARC11-716 IA14 O1+T12+S12N25+AT11 RIGHT VERTICAL (RB1R38)

ALPHAO(2) = -4.090 BETAO (4) = 4.080

SECTION (1)RIGHT VERTICAL DEPENDENT VARIABLE CP

Z/BV	.1580	.3160	.6000	.8400	.9250
X/CV					
.000	.5075	.4699	.4491	.3784	.4259
.050	.5537	.2924	.2758	.3141	.2820
.150	.2478	.2302	.2208	.2308	.2109
.300	.1606	.1393	.1266	.1227	.0618
.520	.0359	-.0226	-.0477	-.1036	-.1858
.685	-.4112	-.4121	-.7447	-.7332	-.7477
.775	-.5295	-.5218	-.6900	-.7141	-.7573
.900		-.3313	-.6187	-.7110	-.7631

ALPHAO(2) = -4.100 BETAO (5) = 8.120

SECTION (1)RIGHT VERTICAL DEPENDENT VARIABLE CP

Z/BV	.1580	.3160	.6000	.8400	.9250
X/CV					
.000	.3431	.2885	.2498	.1576	.2376
.050	.5547	.5214	.4750	.4682	.4150
.150	.4349	.4151	.3758	.3530	.3144
.300	.3329	.2879	.2584	.2171	.1353
.520	.1556	.0622	.0399	-.0565	-.1815
.685	.3453	-.6377	-.6886	-.6943	-.7259
.775	-.3423	-.3884	-.6110	-.6588	-.7058
.900		-.3279	-.5044	-.6217	-.6934

ALPHAO(3) = -.310 BETAO (1) = -8.040

SECTION (1)RIGHT VERTICAL DEPENDENT VARIABLE CP

Z/BV	.1580	.3160	.6000	.8400	.9250
X/CV					
.000	.3805	.2424	.2294	.2426	.1533
.050	-.4187	-.5762	-.8060	-.8924	-.9820
.150	-.5297	-.6032	-.7999	-.8747	-.9348
.300	-.1942	-.5214	-.7263	-.7863	-.7682
.520	-.3572	-.4380	-.6852	-.7174	-.6109
.685	-.5247	-.6511	-.8967	-.6076	-.5690
.775	-.3420	-.5905	-.7171	-.5829	-.5234
.900		-.5003	-.5584	-.5930	-.4978

DATE 06 APR 75 TABULATED PRESSURE DATA NASA - VOL. 7

ARC11 [illegible] 14 DE+T12+S12N25+A751 RIGHT VERTICAL (PB1R38)

ALPHA [illegible] -.52[illegible] BETA (2) = -4.010

SECTION (1)RIGHT VERTICAL DEPENDENT VARIABLE CP

Z/BV	.1580	.3160	.6000	.8400	.9250
X/CV					
.000	.4696	.3867	.4111	.4115	[illegible]
.050	-.2533	.4673	-.6758	-.8434	-.8910
.150	-.0822	-.2723	-.5055	-.6235	-.8399
.300	-.1927	-.2546	-.3352	-.3948	-.3281
.520	-.2513	-.2934	-.3222	-.3551	-.2778
.685	-.4524	-.7268	-.9244	-.7421	-.7938
.775	-.3424	-.4936	-.8175	-.7765	-.7978
.900		-.4586	-.4353	-.5235	-.5945

ALPHAO(3) = -.330 BETAO (3) = .040

SECTION (1)RIGHT VERTICAL DEPENDENT VARIABLE CP

Z/BV	.1580	.3160	.6000	.8400	.9250
X/CV					
.000	.5151	.4495	.4775	.4705	.4890
.050	.1199	-.1664	-.2077	-.1114	-.1361
.150	.0589	-.0236	-.0021	-.0038	.0566
.300	-.0802	-.1044	-.0367	-.0602	-.0844
.520	-.1372	-.1515	-.2056	-.1787	-.2171
.685	-.4337	-.7643	-.8017	-.7558	-.7740
.775	-.3509	-.4972	-.7723	-.7649	-.7812
.900		-.3948	-.7032	-.7722	-.7743

ALPHAO(3) = -.320 BETAO (4) = 4.090

SECTION (1)RIGHT VERTICAL DEPENDENT VARIABLE CP

Z/BV	.1580	.3160	.6000	.8400	.9250
X/CV					
.000	.4532	.4083	.3708	.2942	.3451
.050	.3020	.2271	.2146	.2504	.2212
.150	.1806	.1719	.1068	.1693	.1704
.300	.0910	.0881	.0756	.0696	.0196
.520	-.0084	-.0548	-.0998	-.1296	-.2229
.685	-.4188	-.7253	-.7627	-.7322	-.7635
.775	-.3319	-.5119	-.7167	-.7241	-.7767
.900		-.3543	-.6992	-.7121	-.7814

ARC11-716 IA14 OL+T12+S12N25+AT11 RIGHT VERTICAL (RB1R38)

ALPHAO(3) = -.330 BETAO (4) = 8.130

SECTION (1)RIGHT VERTICAL DEPENDENT VARIABLE CP

Z/BV	.1580	.3160	.6000	.8400	.9250
X/CV					
.000	.3424	.2433	.1346	.0890	.1606
.050	.4852	.4551	.4118	.4185	.3698
.150	.3548	.3507	.3214	.3110	.2842
.300	.2691	.2352	.2121	.1823	.0958
.520	.1145	[illegible]	.0109	-.0779	-.2133
.695	[illegible]	[illegible]	-.6890	-.6461	-.7347
.775	-.5564	-.5417	-.6224	-.6705	-.7215
.900		-.5342	-.4897	-.6258	-.7068

ALPHAO(4) = 4.020 BETAO (1) = -8.050

SECTION (1)RIGHT VERTICAL DEPENDENT VARIABLE CP

Z/BV	.1580	.3160	.6000	.8400	.9250
X/CV					
.000	.2839	.1659	.1464	.1387	.0547
.050	[illegible]	-.6175	-.8827	[illegible]	-.9751
.150	[illegible]	-.6382	-.7322	.8788	-.9177
.300	.2736	-.5715	[illegible]	-.8264	-.7892
.520	-.4546	-.4382	[illegible]	-.7140	-.6366
.695	-.4059	.6175	-.8559	-.6032	-.5683
.775	.5265	.6157	-.7017	-.6011	-.5345
.900		-.5900	.5617	-.6255	-.5199

ALPHAO(4) = 4.020 BETAO (2) = -4.020

SECTION (1)RIGHT VERTICAL DEPENDENT VARIABLE CP

Z/BV	.1580	.3160	.6000	.8400	.9250
X/CV					
.000	.4183	.3066	.3241	.3111	.2696
.050	-.2940	-.5192	-.7179	-.8194	-.8974
.150	-.1317	.3183	-.5498	-.6488	-.6962
.300	-.2402	.3226	-.3748	-.4601	-.4340
.520	-.3317	-.3523	-.3759	-.3852	-.3535
.695	-.3938	-.5723	-.8603	-.7515	-.7756
.775	-.5365	-.4970	-.7065	-.7726	-.7920
.900		-.4249	-.4278	-.4882	-.4591

AFC11-716 DATA (S+T12+[illegible]12N25+AT11 RIGHT VERTICAL WB1F38

ALPHA [illegible] = 4.020 BETA [illegible] = [illegible]

SECTION (1)RIGHT VERTICAL DEPENDENT VARIABLE CP

Z/BV	.1580	.3160	.6000	.8400	[illegible]
X/CV					
.000	.4608	.3755	.3778	.3654	.3942
[illegible]	.0567	-.2165	-.2838	-.1793	-.1872
.15[illegible]	-.0001	-.0968	-.0977	[illegible]	-.0039
.300	-.1496	-.1855	-.1043	[illegible]	-.1400
.520	[illegible]	-.2103	-.2560	-.2266	-.2619
.685	-.4428	-.7291	-.8169	-.7669	-.7957
.775	-.3312	-.4689	[illegible]	-.7880	-.8111
.900		-.4058	-.5215	-.7087	-.7686

ALPHA(4) = 4.010 BETA(4) = 4.110

SECTION (1)RIGHT VERTICAL DEPENDENT VARIABLE CP

Z/BV	.1580	.3160	.6000	.8400	.9250
X/CV					
.000	.4007	.3550	.2838	.2060	.2576
.090	.2298	.1313	.1354	.1785	.1610
.190	.1073	.0792	.0995	.1058	.1118
.300	-.0014	.0215	.0136	.0168	-.0539
.520	-.0705	-.1057	-.1906	-.1843	-.2794
.685	-.4343	[illegible]	-.7792	-.7408	-.7317
.775	-.3428	-.5016	-.7411	-.7628	-.8131
.900		-.3425	-.6614	-.7434	-.7922

ALPHA(4) = 4.000 BETA(5) = 8.160

SECTION (1)RIGHT VERTICAL DEPENDENT VARIABLE CP

Z/BV	.1580	.3160	.6000	.8400	.9250
X/CV					
.000	.2658	.1098	.1151	.0076	.0680
.090	.5080	.3654	.3545	.3537	.3536
.190	.2635	.2089	.2541	.2561	.2305
[illegible]	.1015	.1506	.1907	.1508	.0511
.520	.0480	-.0004	-.0425	-.1074	-.2499
.685	-.4151	-.6550	-.6951	-.6685	.7426
.775	-.3120	-.3095	-.6333	-.6934	-.7355
.900		-.3170	-.4208	-.6296	-.7144

ARC11-716 IA14 O1+T12+S12N25+AT11 RIGHT VERTICAL (RB1R38)

ALPHAO(5) = 7.930 BETAO (1) = -8.010

SECTION (1)RIGHT VERTICAL DEPENDENT VARIABLE CP

Z/BV	.1580	.3160	.6000	.8400	.9250
W/CV					
.000	.3709	.1274	.0829	.0418	-.0900
.090	-.5389	-.8635	-.8547	-.8911	-.9301
.190	-.2099	-.6562	-.8528	-.9020	-.9011
.300	-.5824	-.5132	-.7863	-.8666	-.8879
.525	-.4904	-.4853	-.7134	-.7328	-.7687
.685	-.4125	-.4983	-.7123	-.6444	-.6448
.775	-.5247	-.4571	-.6559	-.6564	-.6324
.900		.3191	-.5049	-.6653	-.6268

ALPHAO(5) = 7.930 BETAO (2) = -3.990

SECTION (1)RIGHT VERTICAL DEPENDENT VARIABLE CP

Z/BV	.1580	.3160	.6000	.8400	.9250
W/CV					
.000	.4290	.2581	.2484	.2199	.1827
.090	.2517	-.9471	-.7317	-.9310	-.8199
.190	.1271	-.3129	-.5612	.5750	-.7621
.300	.2946	-.3743	-.5033	-.4758	-.5374
.525	-.3965	-.3905	-.4160	-.4201	-.3600
.685	.4225	-.4907	.8593	-.7716	-.7431
.775	.2985	-.5345	-.5361	-.5467	-.5658
.900		.4014	-.4294	-.4238	-.3774

ALPHAO(5) = 7.930 BETAO (3) = .040

SECTION (1)RIGHT VERTICAL DEPENDENT VARIABLE CP

Z/BV	.1580	.3160	.6000	.8400	.9250
W/CV					
.000	.4194	.3119	.2940	.2619	.2947
.090	-.0079	-.2591	-.3458	-.2591	-.2646
.190	.0456	-.1580	-.1667	-.1393	-.0490
.300	-.2138	-.2567	-.1842	.1751	-.1966
.525	-.2970	-.2641	-.3065	-.2781	-.3048
.685	-.4981	-.6931	-.8390	-.7903	-.8136
.775	-.3493	-.4549	-.8223	-.8225	-.8389
.900		-.4912	-.4641	-.5958	-.4601

ARC11-716 IA14 OI+T12(S12N25+AT11 RIGHT VERTICAL (RB1R58)

ALPHAO(3) = 7.990 BETAO (4) = 4.110

SECTION (1)RIGHT VERTICAL DEPENDENT VARIABLE CP

Z/BV	.1580	.3160	.6000	.8400	.9250
X/CV					
.000	.4147	.2847	.2098	.1220	.1731
.050	.1567	.0574	.0563	.1153	.1082
.150	.0353	.0027	.0295	.0410	.0727
.300	-.0776	-.0541	-.0377	-.0340	-.0899
.520	-.1352	-.1455	-.1866	-.2232	-.2897
.685	-.4603	-.7504	-.7900	-.7390	-.7826
.775	-.3631	-.4941	-.7529	-.7646	-.8034
.900		-.3417	-.5621	-.7209	-.7828

ALPHAO(5) = 7.910 BETAO (5) = 8.200

SECTION (1)RIGHT VERTICAL DEPENDENT VARIABLE CP

Z/BV	.1580	.3160	.6000	.8400	.9250
X/CV					
.000	.2818	.1488	.0453	-.1031	-.0413
.050	.3063	.2829	.2836	.3101	.2777
.150	.1844	.2075	.2179	.2173	.2232
.300	.0995	.1167	.1265	.1060	.0236
.520	-.0043	-.0084	-.0645	-.1348	-.2726
.685	-.5548	-.6531	-.6976	-.6951	-.7482
.775	-.3421	-.4649	-.6107	-.7008	-.7379
.900		-.3467	-.4665	-.6259	-.7074

ORIGINAL PAGE IS OF POOR QUALITY

ARC11-716 IA14 O1+T12+S12N25+AT11 RIGHT VERTICAL (RB1R39) (15 FEB 74)

REFERENCE DATA

SREF = 2.4210 SQ.FT. XMRP = 29.5800 INCHES
LREF = 38.7090 INCHES YMRP = .0000 INCHES
BREF = 38.7090 INCHES ZMRP = .0000 INCHES
SCALE = .0300 SCALE

PARAMETRIC DATA

MACH = 1.150 ELEVON = .000
RUDDER = .000 SPDBRK = .000

ALPHAO(1) = -8.110 BETAO (1) = -8.020

SECTION (1)RIGHT VERTICAL DEPENDENT VARIABLE CP

Z/BV	.1580	.3160	.6000	.8400	.9250
X/CV					
.000	.5255	.4249	.4498	.4991	.4177
.050	-.2416	-.3900	-.6055	-.7410	-.8643
.150	-.3416	-.4092	-.5972	-.6772	-.7699
.300	-.0026	-.3657	-.5367	-.5716	-.5967
.520	-.1496	-.2690	-.5267	-.5460	-.4476
.685	-.5035	-.6511	-.7513	-.7001	-.7569
.775	-.3748	-.5504	-.7152	-.6137	-.7343
.900		-.4742	-.5501	-.5121	-.5507

ALPHAO(1) = -8.100 BETAO (2) = -4.000

SECTION (1)RIGHT VERTICAL DEPENDENT VARIABLE CP

Z/BV	.1580	.3160	.6000	.8400	.9250
X/CV					
.000	.6523	.6051	.6393	.6563	.6064
.050	-.0376	-.2634	-.4921	-.6837	-.7212
.150	.1255	-.0797	-.2710	-.5907	-.5877
.300	.0256	-.0492	-.1520	-.1519	-.3438
.520	-.0366	-.0780	-.1449	-.1472	-.0665
.685	-.4526	-.6449	-.5927	-.5982	-.5884
.775	-.3540	-.5695	-.6141	-.6069	-.5937
.900		-.4210	-.5960	-.6106	-.5636

ALPHAO(1) = -8.090 BETAO (3) = .030

SECTION (1)RIGHT VERTICAL DEPENDENT VARIABLE CP

Z/BV	.1580	.3160	.6000	.8400	.9250
X/CV					
.000	.6736	.6588	.7132	.7019	.7077
.050	.3090	.0228	-.0249	-.0038	-.0291
.150	.2525	.1814	.1755	.1719	.2038
.300	.1434	.1057	.1514	.1184	.1030
.520	.0639	.0349	-.0206	-.0023	-.0279
.685	-.4695	-.5986	-.6175	-.5850	-.5812

ARC11-716 IA14 O1+T12+S12N25+AT11 RIGHT VERTICAL (RB1R39)

ORIGINAL PAGE IS OF POOR QUALITY

ALPHAO(1) = -8.090 BETAO (3) = .030

SECTION (1)RIGHT VERTICAL DEPENDENT VARIABLE CP

Z/BV	.1580	.3160	.6000	.8400	.9250
X/CV					
.775	-.3420	-.5897	-.5853	-.5813	-.5815
.900		-.3937	-.5611	-.5950	-.5631

ALPHAO(1) = -8.100 BETAO (4) = 4.080

SECTION (1)RIGHT VERTICAL DEPENDENT VARIABLE CP

Z/BV	.1580	.3160	.6000	.8400	.9250
X/CV					
.000	.6467	.6204	.6083	.5495	.5957
.050	.5062	.4407	.4213	.4408	.4086
.150	.4058	.3777	.3688	.3604	.3493
.300	.3131	.2891	.2744	.2559	.1989
.520	.1888	.1376	.0942	.0450	-.0260
.685	-.4351	-.5547	-.5587	-.5704	-.5648
.775	-.3352	-.5221	-.5178	-.5420	-.5726
.900		-.3253	-.4812	-.5476	-.5857

ALPHAO(1) = -8.130 BETAO (5) = 8.160

SECTION (1)RIGHT VERTICAL DEPENDENT VARIABLE CP

Z/BV	.1580	.3160	.6000	.8400	.9250
X/CV					
.000	.5117	.4132	.4010	.3334	.4102
.050	.6715	.6354	.5869	.5887	.5377
.150	.5492	.5251	.4909	.4773	.4425
.300	.4416	.3947	.3747	.3468	.2684
.520	.2699	.1919	.1740	.0926	-.0249
.685	-.3814	-.4911	-.5193	-.5477	-.5471
.775	-.3029	-.3939	-.4565	-.4866	-.5288
.901		-.2393	-.3706	-.4632	-.5228

ARC11-716 IA14 O1+T12+S12N25+AT11 RIGHT VERTICAL (RB1R39)

ALPHAO (2) = -4.100 BETAO (1) = -8.030

SECTION (1)RIGHT VERTICAL DEPENDENT VARIABLE CP

Z/BV	.1580	.3160	.6000	.8400	.9250
X/CV					
.000	.4794	.3788	.3868	.4162	.3413
.050	-.2683	-.4187	-.6451	-.7613	-.8707
.150	-.3740	-.4415	-.6385	-.6924	-.7763
.300	-.0446	-.3830	-.5673	-.5892	-.6012
.520	-.2021	-.3063	-.5412	-.5687	-.4533
.685	-.4978	-.6634	-.7669	-.6636	-.7419
.775	-.3675	-.5289	-.7325	-.6065	-.6739
.900		-.4858	-.5194	-.5196	-.4494

ALPHAO (2) = -4.110 BETAO (2) = -4.010

SECTION (1)RIGHT VERTICAL DEPENDENT VARIABLE CP

Z/BV	.1580	.3160	.6000	.8400	.9250
X/CV					
.000	.5962	.5421	.5719	.5770	.5303
.050	-.0876	-.2941	-.5284	-.7004	-.7297
.150	.0806	-.1038	-.2708	-.6022	-.6188
.300	-.0215	-.0933	-.1749	.1526	-.2686
.520	-.0948	-.1243	-.1822	-.1737	-.1012
.685	-.4312	-.6618	-.6152	-.6117	-.5995
.775	-.3240	-.5027	-.6319	-.6204	-.6113
.900		-.3967	-.6144	-.6246	-.5939

ALPHAO (2) = -4.110 BETAO (3) = .040

SECTION (1)RIGHT VERTICAL DEPENDENT VARIABLE CP

Z/CV	.1580	.3160	.6000	.8400	.9250
X/CV					
.000	.6396	.5988	.6300	.6190	.6407
.050	.2599	-.0077	-.0471	-.0100	-.0132
.150	.2117	.1310	.1268	.1421	.1922
.300	.0767	.0420	.0980	.0861	.0675
.520	.0145	-.0129	-.0498	-.0267	-.0588
.685	-.4083	-.6065	-.6126	-.5843	-.5904
.775	-.3066	-.5241	-.5896	-.5850	-.5950
.900		-.3636	-.5612	-.5994	-.5847

ARC11-716 IA14 O1+T12+S12N25+AT11 RIGHT VERTICAL (RB1R39)

ORIGINAL PAGE IS OF POOR QUALITY

ALPHAO(2) = -4.110 BETAO (4) = 4.170

SECTION (1)RIGHT VERTICAL DEPENDENT VARIABLE CP

Z/BV	.1580	.3160	.6000	.8400	.9250
X/CV					
.000	.5855	.5556	.5310	.4614	.5033
.050	.4308	.3688	.3568	.3821	.3579
.150	.3339	.3170	.3093	.3058	.3042
.300	.2410	.2329	.2207	.2075	.1503
.520	.1373	.0993	.0537	.0080	-.0694
.685	-.4472	-.5690	-.5805	-.5801	-.5916
.775	-.3222	-.5414	-.5436	-.5631	-.6058
.900		-.3277	-.4907	-.5648	-.6262

ALPHAO(2) = -4.130 BETAO (5) = 8.110

SECTION (1)RIGHT VERTICAL DEPENDENT VARIABLE CP

Z/BV	.1580	.3160	.6000	.8400	.9250
X/CV					
.000	.4736	.3947	.3521	.2793	.3474
.050	.5996	.5584	.5125	.5257	.4855
.150	.4778	.4541	.4246	.4242	.4033
.300	.3752	.3376	.3126	.3035	.2287
.520	.2253	.1554	.1362	.0628	-.0545
.685	-.4081	-.5120	-.5311	-.5512	-.5669
.775	-.3020	-.4391	-.4737	-.5035	-.5517
.900		-.2488	-.3913	-.4765	-.5447

ALPHAO(3) = -.330 BETAO (1) = -4.020

SECTION (1)RIGHT VERTICAL DEPENDENT VARIABLE CP

Z/BV	.1580	.3160	.6000	.8400	.9250
X/CV					
.000	.5280	.4571	.4880	.4754	.4348
.050	-.1474	-.3540	-.5905	-.7412	-.7704
.150	-.0047	-.1941	-.3422	-.6507	-.6899
.300	-.0837	-.1550	-.2476	-.2340	-.4269
.520	-.1586	-.1919	-.2382	-.2320	-.1566
.685	-.4474	-.6793	-.6593	-.6288	-.6228
.775	-.3310	-.4868	-.6600	-.6465	-.6339
.900		-.4213	-.5138	-.6487	-.6407

ARC11-716 IA14 C1+T12+S12N25+AT11 RIGHT VERTICAL (RB1R39)

ALPHAO(3) = -.330 BETAO (2) = .040

SECTION (1)RIGHT VERTICAL DEPENDENT VARIABLE CP

Z/BV	.1580	.3160	.6000	.8400	.9250
X/CV					
.000	.5758	.5262	.5509	.5342	.5600
.050	.1726	-.0712	-.1370	-.1145	-.0974
.150	.1498	.0571	.0597	.0677	.1491
.300	.0693	-.0272	.0260	.0353	.0182
.520	-.0753	-.0704	-.0993	-.0822	-.0989
.685	-.3361	-.6342	-.6272	-.6062	-.6092
.775	-.2995	-.4750	-.6102	-.6201	-.6196
.900		-.3550	-.5987	-.6297	-.6185

ALPHAO(3) = -.340 BETAO (3) = 4.070

SECTION (1)RIGHT VERTICAL DEPENDENT VARIABLE CP

Z/BV	.1580	.3160	.6000	.8400	.9250
X/CV					
.000	.5237	.4881	.4610	.3793	.4302
.050	.3754	.2988	.2928	.3227	.3055
.150	.2625	.2390	.2562	.2534	.2589
.300	.1592	.1793	.1751	.1666	.1047
.520	.0907	.0638	.0133	-.0260	-.1071
.685	-.4560	-.5771	-.5896	-.5815	-.6054
.775	.5093	.5465	-.5580	-.5790	-.6227
.900		-.3343	-.5024	-.5740	-.6343

ALPHAO(3) = -.340 BETAO (4) = 8.140

SECTION (1)RIGHT VERTICAL DEPENDENT VARIABLE CP

Z/BV	.1580	.3160	.6000	.8400	.9250
X/CV					
.000	.4037	.3383	.2817	.2036	.2649
.050	.5310	.4890	.4562	.4618	.4249
.150	.3980	.3946	.3723	.3668	.3501
.300	.3090	.2892	.2599	.2555	.1757
.520	.1835	.1236	.0947	.0296	-.0970
.685	-.4175	-.5289	-.5432	-.5516	-.5876
.775	-.2933	-.4650	-.5041	-.5235	-.5783
.900		-.2829	-.4157	-.4893	-.5735

ARC11-716 IA14 O1+T12+S12N25+AT11 RIGHT VERTICAL (RB1R39)

ALPHAO(4) = 4.010 BETAO (1) = -8.080

SECTION (1)RIGHT VERTICAL DEPENDENT VARIABLE CP

X/CV \ Z/BV	.1580	.3160	.6000	.8400	.9250
.000	.3490	.2299	.2208	.2297	.1630
.050	-.4406	-.5119	-.6871	-.7505	-.8226
.150	-.5197	-.5221	-.6864	-.7435	-.7924
.300	-.1835	-.4927	-.6213	-.6707	-.6598
.520	-.3294	-.4258	-.5967	-.6376	-.5367
.685	-.4000	-.5437	-.7603	-.5623	-.5574
.775	-.2944	-.5677	-.6340	-.5396	-.4893
.900		-.4002	-.5123	-.5414	-.4616

ALPHAO(4) = 4.010 BETAO (2) = -4.010

SECTION (1)RIGHT VERTICAL DEPENDENT VARIABLE CP

X/CV \ Z/BV	.1580	.3160	.6000	.8400	.9250
.000	.4779	.3905	.4016	.3829	.3496
.050	-.1977	-.3925	-.6039	-.7339	-.7667
.150	-.0557	-.2179	-.4001	-.6548	-.7066
.300	-.1726	-.2089	-.2560	-.2615	-.2790
.520	-.2096	-.2395	-.2650	-.2710	-.1657
.685	-.4337	-.6465	-.6902	-.6300	-.6340
.775	-.3077	-.4605	-.6796	-.6509	-.6531
.900		-.4312	-.4412	-.6511	-.6727

ALPHAO(4) = 4.000 BETAO (3) = .050

SECTION (1)RIGHT VERTICAL DEPENDENT VARIABLE CP

X/CV \ Z/BV	.1580	.3160	.6000	.8400	.9250
.000	.5299	.4469	.4410	.4085	.4865
.050	.1543	-.1081	-.1913	-.1531	-.1084
.150	.0964	-.0012	-.0158	.0100	.1183
.300	-.0452	-.0935	-.0406	.0103	-.0106
.520	-.1085	-.1195	-.1620	-.1049	-.1262
.685	-.4003	-.6493	-.6463	-.5909	-.6123
.775	-.2874	-.4417	-.6236	-.6048	-.6259
.900		-.5574	-.5710	-.6168	-.6276

ARC11-716 TA14 O1+T12+S12N25+AT11 RIGHT VERTICAL (RB1R39)

ALPHAO(4) = 4.000 BETAO (4) = 4.100

SECTION (1)RIGHT VERTICAL DEPENDENT VARIABLE CP

Z/BV	.1580	.3160	.6000	.8400	.9250
X/CV					
.000	.4699	.4141	.3609	.2917	.3410
.050	.3196	.2151	.2096	.2601	.2534
.150	.2068	.1552	.1776	.1931	.2119
.300	.0929	.0973	.1199	.1191	.0557
.520	.0264	.0092	-.0513	-.0651	-.1457
.645	-.4718	-.5855	-.5996	-.5849	-.6209
.775	-.5059	-.5340	-.5762	-.6003	-.6425
.900		-.5135	-.5177	-.5837	-.6468

ALPHAO(5) = 5.990 BETAO (5) = 8.140

SECTION (1)RIGHT VERTICAL DEPENDENT VARIABLE CP

Z/BV	.1580	.3160	.6000	.8400	.9250
X/CV					
.000	.3329	.2574	.1968	.1134	.1734
.050	.4404	.4072	.3728	.4037	.3735
.150	.3459	.3157	.3072	.3158	.3136
.300	.2227	.2186	.1953	.2111	.1313
.520	.0254	.0754	.0353	.0004	-.1330
.645	-.4734	-.5470	-.5539	-.5572	-.5957
.775	-.5042	-.4925	-.5252	-.5463	-.5919
.900		-.5465	-.4427	-.5031	-.5866

ALPHAO(5) = 7.920 BETAO (1) = -8.050

SECTION (1)RIGHT VERTICAL DEPENDENT VARIABLE CP

Z/BV	.1580	.3160	.6000	.8400	.9250
X/CV					
.000	.3751	.1929	.1666	.1365	.0680
.050	-.4338	-.5419	-.6904	-.7446	-.8075
.150	-.1174	-.5419	-.6917	-.7533	-.7772
.300	-.2771	-.4731	-.6309	-.6967	-.6900
.520	-.4056	-.3712	-.5941	-.6520	-.5694
.645	-.3937	-.4239	-.6450	-.5513	-.5337
.775	-.3052	-.4759	-.5991	-.5483	-.5087
.900		-.2782	-.4995	-.5428	-.4916

ARC11-716 IA14 O1+T12+S12N25+AT11 RIGHT VERTICAL (RB1R39)

ALPHAO(5) = 7.930 BETAO (2) = -3.990

SECTION (1)RIGHT VERTICAL DEPENDENT VARIABLE CP

Z/BV	.1580	.3160	.6000	.8400	.9250
X/CV					
.000	.4550	.3235	.3077	.2681	.2443
.050	-.1917	-.4298	-.6176	-.7496	-.7679
.150	-.0526	-.2424	-.4626	-.6211	-.7296
.300	-.1807	-.2699	-.3084	-.3280	-.3164
.520	-.2802	-.2932	-.3224	-.3118	-.2357
.685	-.4056	-.5510	-.7230	-.6308	-.6572
.775	-.2951	-.4556	-.6961	-.6681	-.6751
.900		-.4274	-.4017	-.5620	-.6655

ALPHAO(5) = 7.930 BETAO (3) = .040

SECTION (1)RIGHT VERTICAL DEPENDENT VARIABLE CP

Z/BV	.1580	.3160	.6000	.8400	.9250
X/CV					
.000	.4929	.3916	.3624	.3491	.3729
.050	.0892	-.1526	-.2405	-.1717	-.2015
.150	.0546	-.0598	-.0787	-.0356	.0518
.300	-.1072	-.1507	-.0876	-.0616	-.0788
.520	-.1627	-.1661	-.1899	-.1668	-.1771
.685	-.4168	-.6600	-.6612	-.6136	-.6515
.775	-.3127	-.4547	-.6344	-.6433	-.6733
.900		-.3826	-.5896	-.6455	-.6734

ALPHAO(5) = 7.930 BETAO (4) = 4.120

SECTION (1)RIGHT VERTICAL DEPENDENT VARIABLE CP

Z/BV	.1580	.3160	.6000	.8400	.9250
X/CV					
.000	.4650	.3721	.2843	.1982	.2413
.050	.2398	.1568	.1502	.1684	.1988
.150	.1276	.0999	.1132	.1222	.1623
.300	.0196	.0394	.0553	.0538	.0077
.520	-.0225	-.0328	-.0905	-.0963	-.1824
.685	-.5169	-.6089	-.6269	-.5774	-.6325
.775	-.3235	-.5679	-.6022	-.6054	-.6564
.900		-.3207	-.5362	-.5772	-.6596

ARC11-716 IA14 OI+T12+S12N25+AT11 RIGHT VERTICAL (RB1R39)

ALPHAO(5) = 7.910 BETAO (5) = 8.200

SECTION (1)RIGHT VERTICAL DEPENDENT VARIABLE CP

Z/BV	.1580	.3160	.6000	.8400	.9250
X/CV					
.000	.3542	.2149	.1188	.0242	.0775
.050	.3353	.3201	.2945	.3134	.3104
.150	.1956	.2278	.2304	.2360	.2676
.300	.1041	.1374	.1378	.1501	.0853
.520	.0187	.0299	-.0195	-.0425	-.1657
.685	-.5969	-.5595	-.5848	-.5562	-.6107
.775	-.5404	-.5661	-.5563	-.5633	-.6117
.900		-.5456	-.4699	-.5177	-.6047

AK011-718 IA14 OI+T12+S12N25+AT11 RIGHT VERTICAL (RB1R40) (15 FEB 74)

REFERENCE DATA

SREF = 2.4210 SQ.FT. XMRP = 29.5800 INCHES
LREF = 38.7090 INCHES YMRP = .0000 INCHES
BREF = 38.7090 INCHES ZMRP = .0000 INCHES
SCALE = .0300 SCALE

PARAMETRIC DATA

MACH = 1.400 ELEVON = .000
RUDDER = .000 SPOBRK = .000

ALPHAO(1) = 7.990 BETAO (1) = -8.040

SECTION (1)RIGHT VERTICAL DEPENDENT VARIABLE CP

Z/CV	.1580	.3160	.6000	.8400	.9250
X/CV					
.030	.6073	.4815	.5525	.5664	.5061
.050	-.1908	-.2514	-.3862	-.5023	-.5665
.150	.3124	-.2698	-.3824	-.4721	-.5313
.300	.0631	-.2730	-.3439	-.3666	-.4251
.520	-.0621	-.2401	-.3508	-.3406	-.3007
.685	-.4226	-.4368	-.5371	-.4953	-.5060
.775	-.3078	-.4687	-.5128	-.5351	-.5231
.900		-.3973	-.4538	-.5953	-.5114

ALPHAO(1) = -7.010 BETAO (2) = -4.000

SECTION (1)RIGHT VERTICAL DEPENDENT VARIABLE CP

Z/BV	.1580	.3160	.6000	.8400	.9250
X/CV					
.000	.7587	.6411	.6063	.7154	.6989
.050	-.0044	-.1509	-.3853	-.4050	-.4446
.150	.1180	.0658	-.2315	-.3140	-.3243
.300	.1135	.0249	-.0173	-.2150	-.2067
.520	.0033	-.0224	-.0606	-.0370	-.0907
.685	-.4185	-.4016	-.4156	-.3493	-.3691
.775	-.3247	-.4210	-.4156	-.3657	-.36[illegible]3
.900		-.3988	-.3884	-.3775	-.3[illegible]1

ALPHAO (1) = -7.000 BETAO (3) = .030

SECTION (1)RIGHT VERTICAL DEPENDENT VARIABLE CP

Z/BV	.1580	.3160	.6000	.8400	.9250
X/CV					
.000	.8002	.7241	.7384	.7245	.7558
.050	.2803	.1252	.0259	.0032	.0150
.150	.3428	.2413	.2148	.2381	.2597
.300	.2048	.1394	.1039	.2072	.2031
.520	.1028	.0974	.0834	.0996	.0997
.685	-.3470	-.3716	-.3553	-.3162	-.3283

ORIGINAL PAGE IS OF POOR QUALITY

ARC11-716 IA14 O1+T12+S12N25+AT11 RIGHT VERTICAL (RB1R40)

ALPHAO(1) = -7.900 BETAO (3) = .030

SECTION (1)RIGHT VERTICAL DEPENDENT VARIABLE CP

Z/BV	.1540	.3160	.6000	.8400	.9250
X/CV					
.775	-.5077	-.3851	-.3472	-.3314	-.3403
.900		-.3685	-.3222	-.3481	-.3456

ALPHAO(1) = -7.910 BETAO (4) = 4.100

SECTION 1 RIGHT VERTICAL DEPENDENT VARIABLE CP

Z/BV	.1540	.3160	.6000	.8400	.9250
X/CV					
.025	.7001	.6649	.6805	.6354	.6829
.050	.5177	.4850	.4829	.5017	.5061
.100	.4265	.3994	.4195	.4404	.4247
.150	[illegible]	.5031	[illegible]	.5243	.5237
.250	[illegible]	[illegible]	[illegible]	.1984	.1493
.500	[illegible]	[illegible]	[illegible]	.3147	-.3072
.775	-.3[illegible]	.3215	[illegible]	.3081	-.3244
.900		-.354	[illegible]	.3091	-.3425

ALPHAO(1) = [illegible] BETAO (5) = 8.190

SECTION 1 RIGHT VERTICAL DEPENDENT VARIABLE CP

Z/BV	.1540	.3160	.6000	.8400	.9250
X/CV					
.025	.6198	.5038	.5196	.4517	.5206
.050	.7560	.6922	.6896	.6839	.6685
.100	.6317	.5842	.5860	.5982	.5546
.250	.4830	.4957	.4805	.4980	.4252
.500	.3741	.3353	.3285	.2832	.1800
.675	-.1919	-.2482	-.2451	-.2739	-.2854
.775	-.2859	-.2490	-.2203	-.2412	-.2793
.900		-.1940	-.1690	-.2199	-.2808

APC11-716 IA14 OL+T12+S12N25+AT11 RIGHT VERTICAL (RB1R40)

ALPHAO (2) = -4.010 BETAO (1) = -8.050

SECTION (1)RIGHT VERTICAL DEPENDENT VARIABLE CP

Z/BV	.1580	.3160	.6000	.8400	.9250
X/CV					
.000	.5558	.6074	.4526	.4705	.4108
.050	-.2469	-.2761	-.4020	-.4925	-.5643
.150	-.3446	-.2938	-.4094	-.4686	-.5399
.300	.0424	-.5076	-.3654	-.3854	-.4274
.520	[illegible]	-.2785	-.3687	-.3680	-.2953
.645	-.4250	-.4441	-.5357	-.4976	-.5158
.775	-.5166	-.4889	-.5214	-.5089	.5292
.900		-.4014	-.4164	-.3786	-.4833

ALPHAO (2) = -4.010 BETAO (2) = -4.020

SECTION (1)RIGHT VERTICAL DEPENDENT VARIABLE CP

Z/BV	.1580	.3160	.6000	.8400	.9250
X/CV					
.000	.6949	.5812	.6175	.6[illegible]40	.6015
.050	-.0800	-.1847	-.4024	-.4215	-.4575
.150	.0752	-.0872	-.2639	-.3405	-.3422
.300	.0787	-.0160	-.0506	-.2394	-.2321
.520	-.0416	-.0665	-.0955	-.0671	-.0490
.645	-.4162	-.4218	-.4289	-.3642	-.3735
.775	-.3056	-.4429	-.4304	-.3863	-.3760
.900		-.3738	-.3767	-.3969	-.3862

ALPHAO (2) = -5.030 BETAO (3) = .030

SECTION (1)RIGHT VERTICAL DEPENDENT VARIABLE CP

Z/BV	.1580	.3160	.6000	.8400	.9250
X/CV					
.000	.7310	.6520	.6365	.6293	.6346
.050	.2274	.0846	-.0159	-.0356	-.0280
.150	.2449	.1073	.1555	.1864	.2147
.300	.1926	.1056	.1292	.1517	.1499
.520	.0467	.0304	.0416	.0594	.0585
.645	-.3762	-.3414	-.3606	-.3261	-.3438
.775	-.3037	-.4018	-.3645	-.3467	-.3601
.900		-.3439	-.3372	-.3586	-.3682

ARC11-716 IA14 OI+T12+S12N25+AT11 RIGHT VERTICAL (RB1R40)

ALPHA(I 2) = -5.940 BETA(J 4) = 4.100

SECTION 1 RIGHT VERTICAL DEPENDENT VARIABLE CP

X/BV	.1590	.3160	.6000	.8400	.9250
Y/CV					
.005	[illegible]	.5988	.6019	.5504	.5964
.015	[illegible]	.4179	.4047	.4336	.4482
.035	.3449	.3197	.3559	.3858	.3791
[illegible]	[illegible]	[illegible]	.2471	.3283	.2715
.152	[illegible]	[illegible]	.1659	.1652	.1004
.685	-.3553	.3165	-.3310	-.3048	-.3211
.775	[illegible]	[illegible]	-.3586	-.3546	-.3452
.900		.3211	.2722	-.3046	-.3586

ALPHA(I 2) = [illegible] BETA(J 5) = 8.150

SECTION [illegible] VERTICAL DEPENDENT VARIABLE CP

X/CV	.1590	.3160	.6000	.8400	.9250
Y/CV					
.028	[illegible]	.4158	.4356	.3523	.4203
[illegible]	[illegible]	[illegible]	[illegible]	.4032	[illegible]
[illegible]	[illegible]	[illegible]	[illegible]	.3237	[illegible]
[illegible]	[illegible]	[illegible]	[illegible]	.4507	[illegible]
[illegible]	[illegible]	[illegible]	[illegible]	.2448	.1301
[illegible]	[illegible]	[illegible]	[illegible]	.2777	-.2598
[illegible]	[illegible]	[illegible]	.2815	[illegible]	[illegible]
[illegible]		[illegible]	[illegible]	[illegible]	[illegible]

ALPHA [illegible] BETA [illegible] = [illegible]

SECTION 1 RIGHT VERTICAL DEPENDENT VARIABLE CP

X/CV	.1590	.3160	.6000	.8400	.9250
Y/CV					
[illegible]	.5240	.5473	.5905	.5847	.5193
.050	-.2981	-.5134	-.4218	-.4993	-.5559
.150	-.5714	-.5203	-.4517	-.4768	-.5622
[illegible]	[illegible]	[illegible]	[illegible]	[illegible]	[illegible]
.525	-.1574	-.2486	-.3857	-.3965	[illegible]
.685	-.3842	-.4556	-.5385	-.5018	[illegible]
.775	-.2805	-.4594	-.5291	-.4731	-.5193
.900		-.3953	-.4057	-.3839	-.4074

ARC11-716 1A14 01+T12+S12N25+AT11 RIGHT VERTICAL (RB1R40)

ALPHAO(3) = -.380 BETAO (2) = -4.020

SECTION (1)RIGHT VERTICAL DEPENDENT VARIABLE CP

X/CV \ Z/BV	.1580	.3160	.6000	.8400	.9250
.000	.6309	.5155	.5438	.5302	.5065
.050	-.0815	-.2204	-.4230	-.4463	-.4791
.150	.0082	-.1189	-.2775	-.3742	-.3771
.300	.0330	-.0528	-.0876	-.2686	-.2659
.520	-.0704	-.0994	-.1307	-.1057	-.0625
.685	-.4194	-.4470	-.4472	-.3815	-.3892
.775	-.3041	-.4598	-.4436	-.4094	-.3947
.900		-.3599	-.3946	-.4187	-.4175

ALPHAO(3) = -.380 BETAO (3) = .020

SECTION (1)RIGHT VERTICAL DEPENDENT VARIABLE CP

X/CV \ Z/BV	.1580	.3160	.6000	.8400	.9250
.000	.6548	.5997	.5869	.5482	.5734
.050	.1614	.0531	-.0345	-.0645	-.0565
.150	.2466	.1505	.1221	.1337	.1714
.300	.1160	.0707	.0911	.1054	.1109
.520	.0206	.0213	.0104	.0160	.0263
.685	-.4012	-.3868	-.3795	-.3562	-.3588
.775	-.2793	-.4105	-.3787	-.3808	-.3806
.900		-.3711	-.3652	-.3880	-.3897

ALPHAO(3) = -.390 BETAO (4) = 4.090

SECTION (1)RIGHT VERTICAL DEPENDENT VARIABLE CP

X/CV \ Z/BV	.1580	.3160	.6000	.8400	.9250
.000	.6476	.5388	.5323	.4729	.5199
.050	.4706	.3606	.3465	.3722	.3922
.150	.3437	.2686	.2980	.3273	.3376
.300	.2019	.2095	.2500	.2679	.2294
.520	.1335	.1363	.1243	.1266	.0767
.685	-.3495	-.3325	-.3470	-.3170	-.3373
.775	-.2842	-.3559	-.3267	-.3293	-.3616
.900		-.3364	-.2896	-.3190	-.3760

ARC11-716 IA14 O1+T12+S12N25+AT11 RIGHT VERTICAL (RB1R40)

ALPHAO(3) = -.390 BETAO (5) = 8.140

SECTION (1)RIGHT VERTICAL DEPENDENT VARIABLE CP

Z/BV	.1580	.3160	.6000	.8400	.9250
X/CV					
.000	.5335	.3823	.3763	.2770	.3497
.050	.6193	.5370	.5524	.5385	.5496
.150	.4606	.4358	.4644	.4660	.4565
.300	.3378	.3715	.3759	.3903	.3254
.520	.2840	.2581	.2239	.2097	.1033
.685	-.2639	-.2827	-.2846	-.2848	-.3157
.775	-.3166	-.2839	-.2724	-.2835	-.3190
.900		-.2506	-.2205	-.2539	-.3177

ALPHAO(4) = 4.080 BETAO (1) = -8.060

SECTION (1)RIGHT VERTICAL DEPENDENT VARIABLE CP

Z/BV	.1580	.3160	.6000	.8400	.9250
X/CV					
.000	.4798	.3148	.3269	.3020	.2499
.050	-.3230	-.3538	-.4341	-.4895	-.5524
.150	-.4054	-.3593	-.4422	-.5015	-.5679
.300	-.0840	-.3637	-.3943	-.4268	-.4279
.520	.1971	-.3147	-.3935	-.4118	-.3190
.685	-.2999	-.4449	-.5382	-.4985	-.5303
.775	-.2725	-.4199	-.5220	-.4738	-.5114
.900		-.3736	-.4005	-.3946	-.3848

ALPHAO(4) = 4.080 BETAO (2) = -4.020

SECTION (1)RIGHT VERTICAL DEPENDENT VARIABLE CP

Z/BV	.1580	.3160	.6000	.8400	.9250
X/CV					
.000	.5754	.4337	.4618	.4298	.4144
.050	-.0945	-.2357	-.4276	-.4533	-.4864
.150	-.0930	-.1392	-.2777	-.3882	-.3954
.300	.0188	-.0972	-.1277	-.2731	-.2884
.520	-.1080	-.1320	-.1626	-.1375	-.0795
.685	-.3736	-.4633	-.4635	-.3915	-.4002
.775	-.2799	-.4271	-.4541	-.4227	-.4106
.900		-.3454	-.4072	-.4282	-.4300

ARC11-716 IA14 O1+T12+S12N25+AT11 RIGHT VERTICAL (RB1R40)

ORIGINAL PAGE IS OF POOR QUALITY

ALPHAO(4) = 4.010 BETAO (3) = .030

SECTION (1)RIGHT VERTICAL DEPENDENT VARIABLE CP

Z/BV	.1580	.3160	.6000	.8400	.9250
X/CV					
.000	.5965	.5118	.4965	.4505	.4687
.050	.1644	.0215	-.0700	-.0831	-.0860
.150	.1887	.0943	.0645	.0917	.1169
.300	.0663	.0234	.0406	.0640	.0632
.520	-.0230	-.0216	-.0322	-.0136	-.0151
.685	-.3830	-.4042	-.3988	-.3509	-.3744
.775	-.2657	-.4233	-.3988	-.3815	-.4004
.900		-.3278	-.3548	-.3827	-.4102

ALPHAO(4) = 4.040 BETAO (4) = 4.090

SECTION (1)RIGHT VERTICAL DEPENDENT VARIABLE CP

Z/BV	.1580	.3160	.6000	.8400	.9250
X/CV					
.000	.5935	.4582	.4450	.3811	.4266
.050	.4293	.3040	.2772	.3067	.3276
.150	.2983	.2132	.2360	.2669	.2705
.300	.1533	.1516	.1928	.2136	.1773
.520	.0929	.1014	.0826	.0922	.0347
.685	-.3813	-.3753	-.3651	-.3180	-.3536
.775	-.2702	-.3603	-.3476	-.3376	-.3788
.900		-.3464	-.2952	-.3249	-.3894

ALPHAO(4) = 4.080 BETAO (5) = 8.160

SECTION (1)RIGHT VERTICAL DEPENDENT VARIABLE CP

Z/BV	.1580	.3160	.6000	.8400	.9250
X/CV					
.000	.4768	.3516	.3171	.2080	.2605
.050	.5163	.4445	.4739	.4684	.4842
.150	.3383	.3398	.3936	.3964	.3949
.300	.2185	.2817	.3206	.3297	.2781
.520	.2151	.2170	.1803	.1803	.0676
.685	-.3083	-.3048	-.3053	-.2855	-.3279
.775	-.3351	-.3141	-.2931	-.2992	-.3312
.900		-.2982	-.2397	-.2656	-.3294

DATE 06 JAN 75 TABULATED PRESSURE DATA - IA14A - VOL. 7

ARC11-716 IA14 O1+T12+S12N25+AT11 RIGHT VERTICAL (RB1R40)

ALPHAO(5) = 8.000 BETAO (1) = -8.060

SECTION (1)RIGHT VERTICAL DEPENDENT VARIABLE CP

Z/BV	.1580	.3160	.6000	.8400	.9250
X/CV					
.000	.4217	.2637	.2750	.2360	.1867
.050	-.2417	-.3284	-.4419	-.4881	-.5458
.150	-.1330	-.3374	-.4460	-.5176	-.5293
.300	-.1801	-.3376	-.4098	-.4534	-.4518
.520	-.2825	-.2851	-.4098	-.4374	-.3771
.685	-.3625	-.3554	-.5112	-.4719	-.5003
.775	-.2988	-.3310	-.4770	-.4294	-.4238
.900		-.2930	.3829	-.4040	-.3802

ALPHAO(5) = 7.960 BETAO (2) = -4.010

SECTION (1)RIGHT VERTICAL DEPENDENT VARIABLE CP

Z/BV	.1580	.3160	.6000	.8400	.9250
X/CV					
.000	.6126	.4115	.3710	.3459	.3200
.050	-.1222	-.2523	-.4145	.4744	-.5088
.150	.1217	-.1365	-.2548	-.4152	-.4238
.300	-.3427	-.1244	-.1567	-.1952	-.3050
.520	-.1607	-.1631	-.1991	-.1686	-.1061
.685	-.3283	-.4838	-.4759	-.4112	-.4169
.775	-.2931	-.4064	-.4665	-.4458	-.4334
.900		-.3447	-.4170	-.4513	-.4514

ALPHAO(5) = 7.910 BETAO (3) = .030

SECTION (1)RIGHT VERTICAL DEPENDENT VARIABLE CP

Z/BV	.1580	.3160	.6000	.8400	.9250
X/CV					
.000	.5862	.4628	.4047	.3655	.3787
.050	.0817	.0006	-.0905	-.0993	-.1223
.150	.1672	.0623	.0204	.0523	.0739
.300	.0294	-.0156	.0015	.0317	.0216
.520	-.0573	-.0524	-.0691	-.0432	-.0568
.685	-.3960	-.4201	-.4158	-.3551	-.3907
.775	-.2647	-.4356	-.4117	-.3870	-.4205
.900		-.3202	-.3509	-.3867	-.4286

ARC11-716 IA14 OI+T12+S12N25+AT11 RIGHT VERTICAL (RB1R40)

ALPHAO. 5: = 0.000 BETAO (4) = 0.210

SECTION : 1)RIGHT VERTICAL DEPENDENT VARIABLE CP

Z/BV	.1580	.3160	.6000	.8400	.9250
X/CV					
.000	.4329	.2905	.2525	.1339	.1901
.050	.4151	.4019	.4074	.4135	.4311
.150	.2890	.2778	.3349	.3460	.3511
.300	.0884	.1978	.2674	.2853	.2387
.520	.1147	.1656	.1465	.1483	.0372
.685	-.3843	-.3175	-.3153	-.2926	-.3411
.775	-.3980	-.3335	-.3007	-.3115	-.3393
.900		-.3411	-.2492	-.2787	-.3393

ARC11-716 IA14 O1+T12+S12N25 RIGHT VERTICAL (RB1R41) (15 FEB 74)

REFERENCE DATA

SREF = 2.4210 SQ.FT. XMRP = 29.5800 INCHES
LREF = 38.7090 INCHES YMRP = .0000 INCHES
BREF = 38.7090 INCHES ZMRP = .0000 INCHES
SCALE = .0300 SCALE

PARAMETRIC DATA

MACH = .600 ELEVON = .000
RUDDER = .000 SPOBRK = .000

ALPHAO(1) = -7.940 BETAO (1) = .020

SECTION (1)RIGHT VERTICAL DEPENDENT VARIABLE CP

Z/BV	.1580	.3160	.6000	.8400	.9250
X/CV					
.000	.4530	.4922	.5510	.5456	.5581
.050	.0720	.0431	-.0695	-.0453	-.0850
.150	.0215	-.0151	-.2816	-.0772	-.0758
.300	.3591	-.1653	-.1373	-.1380	-.1360
.520	-.2277	-.3023	-.3[illegible]3	-.3535	-.2723
.685	-.3[illegible]	.4221	-.3[illegible]	-.5160	-.3116
.775	-.3[illegible]	-.0262	-.2[illegible]	.2060	-.1320
.900		.1327	-.0742	-.0300	-.0259

ALPHAO(1) = -7.950 BETAO (2) = 4.080

SECTION (1)RIGHT VERTICAL DEPENDENT VARIABLE CP

Z/BV	.1580	.3160	.6000	.8400	.9250
X/CV					
.000	.2464	.2079	.2693	.1729	.2939
.050	.2811	.2658	.1775	.2546	.1207
.150	.1758	.1606	-.0492	.1320	.1098
.300	.0618	-.0550	.0169	.0079	-.0224
.520	-.1624	-.2471	-.2771	-.2957	-.2349
.685	-.2595	-.3379	-.2860	-.3450	-.2597
.775	-.1881	-.1869	-.1748	-.1639	-.1258
.900		-.1345	-.0788	-.0524	-.0642

ALPHAO(1) = -7.970 BETAO (3) = 8.150

SECTION (1)RIGHT VERTICAL DEPENDENT VARIABLE CP

Z/BV	.1580	.3160	.6000	.8400	.9250
X/CV					
.000	-.0671	-.3399	-.2792	-.2773	.0117
.050	.4613	.4493	.4070	.4290	.2958
.150	.3215	.2995	.1568	.2681	.2041
.300	.1839	.0819	.1372	.1066	.0410
.520	-.0903	-.1863	-.1855	-.2567	-.1929
.685	-.2618	-.2560	-.2474	-.3260	-.2748

A*211-716 1A14 S1+T12+S12N25 RIGHT VERTICAL (RB1041)

ORIGINAL PAGE IS OF POOR QUALITY

ALPHAC (1) = -7.970 BETAC (3) = 8.150

SECTION (1)RIGHT VERTICAL DEPENDENT VARIABLE CP

Z/BV	.1580	.3160	.6000	.8400	.9250
Y/CV					
.775	-.2734	-.1664	-.1832	-.2015	-.1733
.900		-.1330	-.1046	-.1615	-.1508

ALPHAC (2) = -4.050 BETAC (1) = 8.05

SECTION (1)RIGHT VERTICAL DEPENDENT VARIABLE CP

Z/BV	.1580	.3160	.6000	.8400	.9250
Y/CV					
.000	-.1404	-.3693	-.3356	.1018	-.0858
.050	-.9970	-.7972	-.9617	-.8408	-.6495
.150	-1.0150	-.7318	-.9511	.8052	-.6610
.300	-.2769	-.6396	-.8562	-.7104	-.5172
.520	-.3585	-.4726	-.5935	-.5124	-.4903
.685	-.2874	-.4244	-.4507	-.3443	-.3347
.775	-.2678	-.3090	-.2974	-.3570	-.2966
.900		-.2137	-.1567	-.2711	-.2525

ALPHAC (2) = -4.050 BETAC (2) = -4.020

SECTION (1)RIGHT VERTICAL DEPENDENT VARIABLE CP

Z/BV	.1580	.3160	.6000	.8400	.9250
Y/CV					
.000	.2347	.1759	.2379	.3316	.2659
.050	-.5678	-.5776	-.5609	-.7190	-.7244
.150	-.2425	-.4061	-.4935	-.5904	-.6296
.300	-.2267	-.2995	-.3593	-.3647	-.3346
.520	-.3035	-.3462	-.4462	-.3754	-.2776
.685	-.2731	-.4047	-.4244	-.3910	-.3010
.775	-.2332	-.2786	-.2287	-.2460	-.1592
.900		-.1567	-.0883	-.0767	-.0602

ARC11-716 TA14 01+T12+S12N25 RIGHT VERTICAL (RB1R41)

ALPHAO(2) = -4.050 BETAO (3) = .030

SECTION (1)RIGHT VERTICAL DEPENDENT VARIABLE CP

Z/BV	.1580	.3160	.6000	.8400	.9250
X/CV					
.000	.4027	.4277	.4911	.4764	.4922
.050	[illegible]	.0131	-.0811	-.0560	-.0987
.150	[illegible]	[illegible]	-.2465	-.0927	-.0954
.300	[illegible]	[illegible]	-.1462	-.1370	-.1393
.525	-.2365	[illegible]	-.3750	-.3452	-.2637
.695	[illegible]	[illegible]	-.3460	-.4784	-.2955
.775	[illegible]	-.2292	-.1395	-.2030	-.1203
.900		[illegible]	-.0815	-.0360	-.0110

ALPHAO(2) = [illegible] BETAO (4) = 4.070

SECTION [illegible] DEPENDENT VARIABLE CP

Z/BV	[illegible]	[illegible]	.6000	.8400	.9250
X/CV					
[illegible]	[illegible]	.1569	[illegible]	.0996	.2134
[illegible]	[illegible]	[illegible]	.1517	[illegible]	.0999
[illegible]	[illegible]	[illegible]	[illegible]	[illegible]	.0770
[illegible]	[illegible]	[illegible]	[illegible]	-.0162	-.0447
[illegible]	[illegible]	[illegible]	-.2737	-.2854	-.2214
[illegible]	[illegible]	[illegible]	[illegible]	-.3297	-.2556
.775	[illegible]	[illegible]	-.1711	-.1707	-.1366
[illegible]		-.1472	[illegible]	[illegible]	-.0711

ALPHAO(2) = [illegible] BETAO (5) = 8.110

SECTION (1)RIGHT VERTICAL DEPENDENT VARIABLE CP

Z/BV	.1580	.3160	.6000	.8400	.9250
X/CV					
.000	-.1275	-.3970	-.3655	-.4181	-.1045
.050	.4228	.4160	.3748	.3998	.2920
.150	.2944	.2715	.1326	.2449	.1812
.300	.1526	.0658	.1166	.0906	.0225
.525	-.1055	-.1924	-.1749	-.2552	-.2005
.695	-.2622	-.2478	-.2413	-.3143	-.2517
.775	-.1995	-.1663	-.1517	-.1928	-.1776
.900		-.1466	-.1012	-.1478	-.1824

ARC11-716 IA14 01+712+512/125 RIGHT VERTICAL (RB1R41)

ALPHAO (2) = -.310 BETAO (1) = -8.040

SECTION (1)RIGHT VERTICAL DEPENDENT VARIABLE CP

X/CV \ Z/BV	.1580	.3160	.6000	.8400	.9250
.000	-.1882	-.4236	-.4021	-.1957	-.1857
.050	-1.0450	-.8221	-.9502	-.8403	-.6469
.150	-1.0350	-.7498	-.9744	-.7938	-.5943
.300	-.2884	-.6795	-.9205	-.7175	-.5145
.520	-.3772	-.4491	-.5867	-.5194	-.3945
.685	-.2708	-.4133	-.3956	-.4090	-.3233
.775	-.2558	-.2946	-.2683	-.3564	-.2874
.900		-.2060	-.1570	-.2519	-.2304

ALPHAO (3) = -.320 BETAO (2) = -4.020

SECTION (1)RIGHT VERTICAL DEPENDENT VARIABLE CP

X/CV \ Z/BV	.1580	.3160	.6000	.8400	.9250
.000	.1940	.1320	.1936	.2693	.2016
.050	-.5852	-.5778	-.5612	-.7093	-.6683
.150	-.2573	-.4139	-.5027	-.6234	-.6076
.300	-.2407	-.3010	-.3728	-.3719	-.3458
.520	-.2975	-.3441	-.4331	-.3513	-.2601
.685	-.2699	-.3880	-.3976	-.3781	-.2808
.775	-.2349	-.2750	-.2240	-.2328	-.1535
.900		-.1553	-.0877	-.0717	-.0538

ALPHAO (3) = -.320 BETAO (3) = .040

SECTION (1)RIGHT VERTICAL DEPENDENT VARIABLE CP

X/CV \ Z/BV	.1580	.3160	.6000	.8400	.9250
.000	.3587	.3833	.4383	.4225	.4298
.050	.0037	.0017	-.0925	-.0629	-.1177
.150	-.0349	-.0580	-.2867	-.0933	-.0915
.300	-.1088	-.1864	-.1521	-.1460	-.1454
.520	-.2412	-.2992	-.3728	-.3412	-.2570
.685	-.2491	-.3967	-.3471	-.4281	-.2808
.775	-.2023	-.2288	-.1905	-.1999	-.1170
.900		-.1470	-.0754	-.0388	-.0152

ARC11-716 IA14 01+T12+S12N25 RIGHT VERTICAL (RB1R41)

ALPHAO(3) = -.330 BETAO (4) = 4.060

SECTION (1)RIGHT VERTICAL DEPENDENT VARIABLE CP

Z/BV	.1580	.3160	.6000	.8400	.9250
X/CV					
.000	.1843	.0882	.1211	.0052	.1084
.050	.2217	.2141	.1395	.2224	.1059
.150	.1199	.1128	-.0550	.1033	.0731
.300	.0172	-.0705	-.0059	-.0101	-.0552
.520	-.1751	-.2477	-.2627	-.2664	-.2062
.685	-.2584	-.3253	-.3224	-.3135	-.2369
.775	-.1875	-.1987	-.1623	-.1596	-.1228
.900		.1449	-.0791	-.0581	-.0704

ALPHAO(3) = -.330 BETAO (5) = 8.140

SECTION (1)RIGHT VERTICAL DEPENDENT VARIABLE CP

Z/BV	.1580	.3160	.6000	.8400	.9250
X/CV					
.000	-.1858	-.5145	-.4658	-.4877	-.1578
.050	.4057	.3949	.3527	.3741	.2007
.150	.2742	.2579	.1742	.2302	.1603
.300	.1450	.0637	.0143	.0838	.0116
.520	-.1083	-.1942	.1605	-.2548	-.1906
.685	-.2656	-.2417	-.2439	-.2859	-.2396
.775	.2175	-.1574	-.1470	-.1867	-.1776
.900		-.1446	-.0989	-.1545	-.1841

ALPHA(4) = 4.130 BETAO (1) = -8.050

SECTION (1)RIGHT VERTICAL DEPENDENT VARIABLE CP

Z/BV	.1580	.3160	.6000	.8400	.9250
X/CV					
.000	-.2829	-.5236	-.5376	-.5162	-.2764
.050	-1.0600	-.8537	-.9517	-.7802	-.5661
.150	-1.1710	-.8039	-1.0240	-.7627	-.5403
.300	-.3103	-.7368	-.9949	-.6912	-.4798
.520	-.3427	-.4161	-.5313	-.5136	-.3834
.685	-.2475	-.3752	-.3227	-.4038	-.3056
.775	-.2177	-.2609	-.2177	-.3453	-.2697
.900		-.2052	-.1106	-.2552	-.2191

ARC11-716 1A14 04*11c*512N25 RIGHT VERTICAL (RB1R41)

ALPHA(4) = 4.130 BETAO (2) = -4.010

SECTION (1)RIGHT VERTICAL DEPENDENT VARIABLE CP

Z/BV	.1580	.3160	.6000	.8400	.9250
X/CV					
.000	.1525	.0626	.1008	.1730	.1139
.050	-.8102	-.5667	-.5595	-.6603	-.6570
.150	-.2697	-.4274	-.5350	-.6090	-.6065
.300	-.2[illegible]6	-.2967	-.3816	-.5660	-.3181
.520	-.2[illegible]38	-.3228	-.3979	-.3169	-.2314
.645	-.2293	-.3495	-.3674	-.3259	-.2520
.775	.1969	-.2360	-.2016	-.2025	-.1365
.900		-.1525	-.0789	-.0605	-.0395

ALPHA(4) = 4.130 BETAO (3) = .060

SECTION (1)RIGHT VERTICAL DEPENDENT VARIABLE CP

Z/BV	.1580	.3160	.6000	.8400	.9250
X/CV					
.000	.3214	.3580	.3875	.3634	.3713
.050	-.0196	-.0127	-.0978	-.0764	-.1145
.150	-.0645	-.0660	-.2996	-.0970	-.0912
.300	-.1201	-.1846	-.1510	-.1393	-.1401
.520	-.2338	-.2919	-.3508	-.3124	-.2426
.645	-.2344	-.3726	-.3381	-.3744	-.2620
.775	-.1935	-.2224	-.1796	-.1914	-.1083
.900		-.1426	-.0685	-.0574	-.0135

ALPHA(4) = 4.120 BETAO (4) = 4.080

SECTION (1)RIGHT VERTICAL DEPENDENT VARIABLE CP

Z/BV	.1580	.3160	.6000	.8400	.9250
X/CV					
.000	.1445	.0908	.0815	-.0546	.0236
.050	.1086	.1908	.1234	.1976	.0891
.150	.0984	.0976	-.0648	.0894	.0527
.300	.0022	-.0790	-.0875	-.0181	-.0561
.520	-.1742	-.2405	-.2441	-.2518	-.2054
.645	-.2634	-.3267	-.3029	-.2944	-.2086
.775	-.1925	-.1908	-.1558	-.1510	-.1165
.900		-.1511	-.0737	-.0488	-.0[illegible]7

ARC11-716 IA14 OL+T12+S12N25 RIGHT VERTICAL (R91R41)

ALPHAO(4) = 4.110 BETAO (5) = 8.150

SECTION (1)RIGHT VERTICAL DEPENDENT VARIABLE CP

Z/BV	.1580	.3160	.6000	.8400	.9250
X/CV					
.000	-.2382	-.5497	-.5446	-.5554	-.2211
.050	.5731	.3683	.3137	.3399	.2209
.150	.2490	.2366	.1075	.2062	.1403
.300	.1270	.0523	.1010	.0722	-.0021
.520	-.1079	-.1840	-.1492	-.2496	-.1813
.685	-.2605	-.2460	-.2495	-.2729	-.2342
.775	-.1907	-.1651	-.1350	-.1767	-.1722
.900		-.1486	-.0966	-.1592	-.1781

ALPHAO(5) = 7.990 BETAO (1) = -8.000

SECTION (1)RIGHT VERTICAL DEPENDENT VARIABLE CP

Z/BV	.1580	.3160	.6000	.8400	.9250
X/CV					
.000	-.2792	-.5912	-.5774	-.4017	-.3678
.050	-1.0650	-.8362	-.9168	-.7392	-.5677
.150	-.8981	-.8513	-1.0200	-.7366	-.5391
.300	-.5451	-.7305	-.9693	-.6882	-.4709
.520	-.5027	-.5212	-.6319	-.4995	-.3842
.685	-.1912	-.3061	-.2484	-.3847	-.2920
.775	-.1862	-.2269	-.1784	-.3235	-.2494
.900		-.2269	-.1078	-.2319	-.2079

ALPHAO(5) = 8.000 BETAO (2) = -4.010

SECTION (1)RIGHT VERTICAL DEPENDENT VARIABLE CP

Z/BV	.1580	.3160	.6000	.8400	.9250
X/CV					
.000	.1368	.0236	.0559	.1013	.0595
.050	-.6318	-.5637	-.5362	-.6614	-.6050
.150	-.2760	-.4212	-.5555	-.6375	-.5627
.300	-.2517	-.2899	-.5627	-.5610	-.3485
.520	-.2696	-.3011	-.5686	-.2917	-.2219
.685	-.1854	-.3050	-.3418	-.2950	-.2287
.775	-.1755	-.2047	-.1858	-.1796	-.1251
.900		-.1882	-.0732	-.0416	-.0506

AFC11-716 IA14 OL+T12+S12N25 RIGHT VERTICAL (RB1R41)

ALPHAO(5) = 0.000 BETAO (3) = .010

SECTION (1)RIGHT VERTICAL DEPENDENT VARIABLE CP

Z/BV	.1580	.3160	.6000	.8400	.9250
X/CV					
.000	.3097	.3081	.3404	.3085	.3156
.050	-.0445	.0269	-.0645	-.0735	-.1213
.150	-.0938	-.0712	-.2915	-.0957	-.0903
.300	-.1330	-.1911	-.1465	-.1328	-.1357
.520	-.2358	-.2466	-.3321	-.2874	-.2180
.685	-.2218	-.3636	-.3235	.3427	-.2333
.775	-.1731	-.2230	-.1625	-.1704	-.1019
.900		-.1422	-.0722	-.0326	-.0039

ALPHAO(5) = 7.070 BETAO (4) = 8.160

SECTION (1)RIGHT VERTICAL DEPENDENT VARIABLE CP

Z/BV	.1580	.3160	.6000	.8470	.9250
X/CV					
.000	-.2532	-.5910	-.5917	-.6089	-.3021
.050	.3476	.3422	.2848	.3097	.2028
.150	.2274	.2177	.0925	.1917	.1270
.300	.1133	.0469	.0885	.0707	-.0146
.520	-.1084	-.1804	-.1515	-.2387	-.1706
.685	-.2536	-.2629	-.2676	-.2536	-.2290
.775	-.2014	-.1757	-.1397	-.1612	-.1650
.900		-.1715	-.0942	-.1370	-.1737

ARC11-716 IA14 01+T12+S12N25 RIGHT VERTICAL (RB1R42) (16 FEB 74)

REFERENCE DATA

SREF = 2.4210 SQ.FT. XMRP = 29.5800 INCHES
LREF = 38.7090 INCHES YMRP = .0000 INCHES
BREF = 38.7090 INCHES ZMRP = .0000 INCHES
SCALE = .0300 SCALE

PARAMETRIC DATA

MACH = .750 ELEVON = .000
RUDDER = .000 SPOBRK = .000

ALPHAO(1) = -7.890 BETAO (1) = -8.000

SECTION (1)RIGHT VERTICAL DEPENDENT VARIABLE CP

Z/BV	.1580	.3160	.6000	.8400	.9250
X/CV					
.000	.0438	-.1636	-.0826	.1790	.1171
.050	-.9334	-.8037	-1.0880	-.6155	-.5456
.150	-1.0150	-.8088	-1.0780	-.8073	-.9616
.300	-.3091	-.7188	-.9439	-.5871	-.5718
.520	-.3845	-.5129	-.7294	-.5096	-.4437
.685	-.2962	-.4644	-.5821	-.4175	-.3085
.775	-.2969	-.3363	-.4929	-.3764	-.2809
.900		-.2321	-.3256	-.3089	-.2359

ALPHAO(1) = -7.780 BETAO (2) = -3.990

SECTION (1)RIGHT VERTICAL DEPENDENT VARIABLE CP

Z/BV	.1580	.3160	.6000	.8400	.9250
X/CV					
.000	.3213	.2551	.3370	.4120	.3528
.050	-.5500	-.5838	-.6294	-.8251	-.7535
.150	.2345	-.5031	-.5490	-.7550	-.6855
.300	-.2267	-.3134	-.4063	-.5146	-.5299
.520	-.3304	-.3733	-.5175	-.4538	-.3672
.685	-.3010	-.4810	-.4239	-.4895	-.3268
.775	-.2661	-.3319	-.2602	-.2632	-.1987
.900		-.1833	-.1012	-.0922	-.0896

ALPHAO(1) = -7.780 BETAO (3) = .040

SECTION (1)RIGHT VERTICAL DEPENDENT VARIABLE CP

Z/BV	.1580	.3160	.6000	.8400	.9250
X/CV					
.000	.4678	.4820	.5534	.5360	.5446
.050	.0600	.0285	-.0768	-.0601	-.1143
.150	.0146	-.0188	-.2973	-.1047	-.1041
.300	-.0650	-.1732	-.1476	-.1630	-.1690
.520	-.2382	-.3246	-.4093	-.3939	-.3262
.685	-.2922	-.4948	-.4986	-.5888	-.4210

ARC11-718 1A14 01+T12+512N25 RIGHT VERTICAL (RB1R42)

ALPHAO (1) = -7.780 BETAO (3) = .040

SECTION (1)RIGHT VERTICAL DEPENDENT VARIABLE CP

X/CV \ Z/BV	.1580	.3160	.6000	.8400	.9250
.775	-.2291	-.2753	-.2716	-.2489	-.1659
.900		-.1790	-.0888	-.0499	-.0184

ALPHAO(1) = -7.790 BETAO (4) = 4.090

SECTION (1)RIGHT VERTICAL DEPENDENT VARIABLE CP

X/CV \ Z/BV	.1580	.3160	.6000	.8400	.9250
.000	.3216	.2609	.3133	.2221	.3304
.050	.2921	.2659	.1805	.2457	.0994
.150	.1903	.1657	-.0432	.1126	.0850
.300	.0833	-.0483	.0130	-.0236	-.0564
.520	-.1569	-.2473	-.2931	-.3355	-.2780
.685	-.2849	-.4082	-.4094	-.4545	-.3389
.775	-.2111	-.2118	-.2119	-.2137	-.1505
.900		-.1605	-.0985	-.0733	-.0824

ALPHAO(1) = -7.970 BETAO (5) = 8.160

SECTION (1)RIGHT VERTICAL DEPENDENT VARIABLE CP

X/CV \ Z/BV	.1580	.3160	.6000	.8400	.9250
.000	.0369	-.1860	-.1021	-.0674	.1296
.050	.4777	.4648	.3979	.4066	.2682
.150	.3398	.3174	.1518	.2519	.1859
.300	.2065	.0906	.1340	.0827	.0036
.520	-.0752	-.1794	-.2043	-.2943	-.2613
.685	-.2749	-.3220	-.3153	-.4793	-.3711
.775	-.2084	-.1781	-.2223	-.2954	-.2339
.900		-.1679	-.1847	-.2395	-.2318

ARC11-716 IA14 O1+T12+S12N25 RIGHT VERTICAL (RB1R42)

ALPHAO(2) = -4.020 BETAO (1) = -8.060

SECTION (1)RIGHT VERTICAL DEPENDENT VARIABLE CP

Z/BV	.1580	.3160	.6000	.8400	.9250
X/CV					
.000	.0078	-.2172	-.1639	.0773	.0370
.050	-.9409	-.9243	-1.0560	-.6199	-.5330
.150	-1.0230	-.8477	-1.0670	-.6082	-.5545
.300	-.3697	-.7657	-.9460	-.5718	-.5517
.520	-.3987	-.4983	-.7121	-.4896	-.4459
.695	-.3016	-.4515	-.5505	-.4189	-.3286
.775	-.3021	-.3296	-.4400	-.3751	-.2943
.900		-.2416	-.2861	-.3060	-.2517

ALPHAO(2) = -4.030 BETAO (2) = -4.030

SECTION (1)RIGHT VERTICAL DEPENDENT VARIABLE CP

Z/BV	.1580	.3160	.6000	.8400	.9250
X/CV					
.000	.2698	.2103	.2759	.3451	.2859
.050	-.5654	-.6396	-.6[illegible]	-.7743	-.7368
.150	-.2680	-.4999	-.[illegible]1	-.7219	-.6708
.[illegible]	-.2532	-.3178	-.4[illegible]2	-.4867	-.5173
.52[illegible]	-.3371	-.3767	-.5[illegible]97	-.4238	-.3434
.6[illegible]	-.2977	-.4692	-.4476	-.4494	-.3151
.775	.2687	-.3326	-.2564	-.2495	-.1792
.900		-.1871	-.0973	-.0815	-.0792

ALPHAO(2) = -4.040 BETAO (3) = .040

SECTION (1)RIGHT VERTICAL DEPENDENT VARIABLE CP

Z/BV	.1580	.3160	.6000	.8400	.9250
X/CV					
.000	.4215	.4293	.4953	.4721	.4776
.050	.0373	.0141	-.0927	-.0669	-.1319
.150	-.0209	-.0446	-.3024	-.1146	-.1101
.300	-.0918	-.1823	-.1560	-.1715	-.1804
.520	-.2490	-.3170	-.4086	-.3902	-.3164
.695	-.2906	-.4598	-.4682	-.5593	-.3763
.775	-.2266	-.2706	-.2553	-.2454	-.1487
.900		-.1799	-.0927	-.0559	-.0210

APC11-T16 IA14 C1+T12+S12N25 RIGHT VERTICAL (RB1R42)

ALPHAO (1) = -4.040 BETAO (4) = 4.070

SECTION (1)RIGHT VERTICAL DEPENDENT VARIABLE CP

Z/BV	.1580	.3160	.6000	.8400	.9250
X/CV					
.000	.2672	.2070	.2456	.1431	.2443
.050	.2449	.2324	.1436	.2203	.0809
.150	.1486	.1381	-.0620	.0914	.0571
.300	.0436	-.0638	-.0065	-.0359	-.0204
.520	-.1670	-.2583	-.3006	-.3362	-.2795
.685	-.2877	-.4098	-.4182	-.4328	-.3097
.775	-.2132	-.2144	-.2048	-.2099	-.1505
.900		-.1728	-.1026	-.0754	-.0805

ALPHAO (1) = -4.040 BETAO (5) = 8.130

SECTION (1)RIGHT VERTICAL DEPENDENT VARIABLE CP

Z/BV	.1580	.3160	.6000	.8400	.9250
X/CV					
.000	.0082	-.2367	-.1903	-.1419	.0542
.050	.4309	.4181	.3595	.3749	.2453
.150	.2951	.2802	.1187	.2229	.1518
.300	.1716	.0720	.1125	.0624	-.0189
.520	-.0908	-.1942	-.2122	-.3003	-.2723
.685	-.2868	-.3216	-.3130	-.4521	-.3349
.775	-.2173	-.1907	-.2129	-.2932	-.2326
.900		-.1768	-.1668	-.2389	-.2347

ALPHAO(3) = -.320 BETAO (1) = -8.080

SECTION (1)RIGHT VERTICAL DEPENDENT VARIABLE CP

Z/BV	.1580	.3160	.6000	.8400	.9250
X/CV					
.000	-.0389	-.2884	-.2492	-.0276	-.0534
.050	-.9613	-.9492	-1.0470	-.6135	-.5264
.150	-1.0710	-.8835	-1.0820	-.5967	-.5229
.300	-.3908	-.7832	-.9778	-.5576	-.5068
.520	-.3887	-.4699	-.7314	-.4739	-.4404
.685	-.2893	-.4370	-.5140	-.4156	-.3407
.775	-.2824	-.3106	-.3897	-.3834	-.2981
.900		-.2321	-.2244	-.3116	-.2469

ARC11-716 IA14 O1+T12+S12N25 RIGHT VERTICAL (RB1R42)

ALPHAO(3) = -.340 BETAO (2) = -4.010

SECTION (1)RIGHT VERTICAL DEPENDENT VARIABLE CP

X/CV \ Z/BV	.1580	.3160	.6000	.8400	.9250
.000	.2328	.1609	.2176	.2770	.2144
.050	-.6078	-.6653	-.6203	-.7537	-.6971
.150	-.2885	-.5032	-.5719	-.7200	-.6528
.300	-.2854	-.3194	-.4514	-.4861	-.4975
.520	-.3294	-.3693	-.5040	-.3985	-.3280
.685	-.2916	-.4492	-.4386	-.4146	-.2872
.775	-.2573	-.3239	-.2535	-.2492	-.1660
.900		-.1862	-.1027	-.0770	-.0721

ALPHAO(3) = -.340 BETAO (3) = .050

SECTION (1)RIGHT VERTICAL DEPENDENT VARIABLE CP

X/CV \ Z/BV	.1580	.3160	.6000	.8400	.9250
.000	.4007	.3914	.4410	.4147	.4243
.050	-.0071	-.0056	-.1129	-.0709	-.1436
.150	-.0569	-.0622	-.1056	-.1156	-.1210
.300	-.1213	-.1941	-.1972	-.1747	-.1804
.520	-.2502	-.3226	-.4036	-.3811	-.3045
.685	-.2699	-.4472	-.4421	-.4995	-.3362
.775	-.2286	-.2722	-.2370	-.2214	-.1294
.900		-.1903	-.0852	-.0472	-.0171

ALPHAO(3) = -.350 BETAO (4) = 4.000

SECTION (1)RIGHT VERTICAL DEPENDENT VARIABLE CP

X/CV \ Z/BV	.1580	.3160	.6000	.8400	.9250
.000	.2205	.1456	.1647	.0602	.1651
.050	.2104	.2119	.1336	.2159	.0683
.150	.1189	.1117	-.0736	.0831	.0384
.300	.0215	-.0721	-.0202	-.0356	-.0930
.520	-.1766	-.2624	-.2965	-.3168	-.2759
.685	-.2931	-.4008	-.4122	-.3870	-.2876
.775	-.2218	-.2230	-.2027	-.2005	-.1452
.900		-.1840	-.1023	-.0743	-.0752

APC11-716 IA14 01+T12+012N25 RIGHT VERTICAL (RB1R42)

ORIGINAL PAGE IS OF POOR QUALITY

ALPHAO(3) = -.340 BETAO (5) = 3.160

SECTION (1)RIGHT VERTICAL DEPENDENT VARIABLE CP

Z/BV	.1580	.3160	.6000	.8400	.9250
X/CV					
.000	-.0525	-.3236	-.2980	-.2246	-.1342
.050	.4031	.3951	.3316	.3460	.2283
.150	.2763	.2596	.1044	.2037	.1338
.300	.1534	.0633	.0998	.0556	-.0337
.520	-.0948	-.1953	-.2029	-.2968	-.2753
.685	-.2903	-.3218	-.2883	-.4250	-.3216
.775	-.2201	-.1902	-.1987	-.2899	-.2407
.900		-.1739	-.1606	-.2374	-.2314

ALPHAO(4) = 4.220 BETAO (1) = -8.060

SECTION (1)RIGHT VERTICAL DEPENDENT VARIABLE CP

Z/BV	.1580	.3160	.6000	.8400	.9250
X/CV					
.000	-.5519	-.0888	-.1436	.0676	-.0556
.050	-.0519	-.0529	-.0879	-.0180	.3481
.150	.0378	-.0047	-.0395	-.0494	.2939
.300	.0102	-.0451	.0103	-.4255	.1960
.520	-.0475	.0075	.0058	-.3836	.1531
.685	-.0127	-.0146	.0980	-.1932	.1663
.775	-.1425	-.0999	.1026	-.1623	.2824
.900		-.1078	.0391	-.2390	.3259

ALPHAO(4) = 4.210 BETAO (2) = -4.030

SECTION (1)RIGHT VERTICAL DEPENDENT VARIABLE CP

Z/BV	.1580	.3160	.6000	.8400	.9250
X/CV					
.000	.1874	.0976	.1362	.1798	.1286
.050	-.6251	-.6514	-.6081	-.7294	-.6587
.150	-.3307	-.4871	-.5999	-.7093	-.6182
.300	-.2840	-.3158	-.4479	-.4668	-.4979
.520	-.3004	-.3433	-.4504	-.3502	-.2853
.685	-.2423	-.3922	-.3909	-.3483	-.2539
.775	-.2245	-.2772	-.2249	-.2150	-.1421
.900		-.1818	-.0927	-.0623	-.0449

ARC11-716 IA14 O1+T12+S12N25 RIGHT VERTICAL (RB1R42)

ALPHAO(4) = 4.210 BETAO (3) = .030

SECTION (1)RIGHT VERTICAL DEPENDENT VARIABLE CP

Z/BV	.1580	.3160	.6000	.8400	.9250
X/CV					
.000	.3506	.3392	.3836	.3450	.3608
.050	-.0441	-.0313	-.1141	-.0900	-.1561
.150	-.0808	-.0773	-.3225	-.1259	-.1170
.300	-.1368	-.2009	-.1683	-.1725	-.1801
.520	-.2477	-.3106	-.3928	-.3675	-.2738
.685	-.2475	-.4161	-.4225	-.4502	-.3002
.775	-.2126	-.2587	-.2101	-.2137	-.1219
.900		-.1763	-.0859	-.0448	-.0077

ALPHAO(4) = 4.200 BETAO (4) = 4.090

SECTION (1)RIGHT VERTICAL DEPENDENT VARIABLE CP

Z/BV	.1580	.3160	.6000	.8400	.9250
X/CV					
.000	.1723	.0877	.0863	-.0246	.0645
.050	.1794	.1890	.1231	.1867	.0686
.150	.0955	.0947	.0784	.0754	.0364
.300	.0059	-.0643	-.0243	-.0360	-.0874
.520	-.1741	-.2494	-.2732	-.2894	-.2533
.685	-.2810	-.3758	[illegible]	-.3548	-.2463
.775	-.2055	-.2142	[illegible]	-.1914	-.1377
.900		-.1774	-.0965	-.0681	-.0670

ALPHAO(4) = 4.190 BETAO (5) = 8.160

SECTION (1)RIGHT VERTICAL DEPENDENT VARIABLE CP

Z/BV	.1580	.3160	.6000	.8400	.9250
X/CV					
.000	-.0896	-.3900	-.3834	-.3256	-.1067
.050	.3708	.3658	.3035	.3186	.1911
.150	.2496	.2395	.0893	.1893	.1177
.300	.1392	.0542	.0916	.0537	-.0373
.520	-.0962	-.1839	-.1818	-.2758	-.2620
.685	-.2696	-.2984	-.2744	-.3684	-.3081
.775	-.2053	-.1834	-.1795	-.2599	-.2200
.900		-.1715	-.1283	-.2248	-.2109

AP011-716 IA14 OB+T12+S12R25 RIGHT VERTICAL (RB1R42)

ALPHAO(1) = 8.070 BETAO (1) = -8.050

SECTION (1)RIGHT VERTICAL DEPENDENT VARIABLE CP

Z/BV	.1580	.3160	.6000	.8400	.9250
X/CV					
.000	-.1324	-.4376	-.4210	-.2870	-.2514
.050	-1.0750	-.9221	-.8781	-.6745	-.4310
.150	-.8130	-.9722	-.9514	-.6403	-.4514
.300	-.4293	-.7738	-.9188	-.6008	-.4183
.520	-.3011	-.3024	-.6836	-.4953	-.3483
.685	-.2190	-.2754	-.3839	-.4150	-.3147
.775	-.2023	-.2342	-.3017	-.3914	-.2721
.900		-.2286	-.1766	-.3254	-.2297

ALPHAO(5) = 8.080 BETAO (2) = -3.990

SECTION (1)RIGHT VERTICAL DEPENDENT VARIABLE CP

Z/BV	.1580	.3160	.6000	.8400	.9250
X/CV					
.000	.1746	.0668	.0904	.1141	.0591
.050	-.6183	-.6421	-.5982	-.7052	-.6377
.150	-.2998	-.4762	-.6083	-.6921	-.6078
.300	-.2791	-.3071	-.4401	-.4533	-.4730
.520	-.2928	-.3214	-.4150	-.3199	-.2510
.685	-.2255	-.3464	-.3656	-.3126	-.2276
.775	-.1950	-.2351	-.2084	-.1866	-.1208
.900		-.1900	-.0812	-.0419	-.0294

ALPHAO(5) = 7.970 BETAO (3) = .050

SECTION (1)RIGHT VERTICAL DEPENDENT VARIABLE CP

Z/BV	.1580	.3160	.6000	.8400	.9250
X/CV					
.000	.3301	.3070	.3381	.2992	.3116
.050	-.0722	-.0483	-.1159	-.0895	-.1589
.150	-.1009	-.0823	-.3153	-.1145	-.1190
.300	-.1472	-.1938	-.1697	-.1603	-.1717
.520	-.2422	-.2932	-.3738	-.3419	-.2667
.685	-.2304	-.3881	-.3941	-.3994	-.2678
.775	-.2021	-.2510	-.1928	-.1946	-.1047
.900		-.1733	-.0731	-.0375	.0020

ARC11-716 IA14 O1+T12+S12N25 RIGHT VERTICAL (RB1R42)

ALPHAO(5) = 7.980 BETAO (4) = 4.130

SECTION (1)RIGHT VERTICAL DEPENDENT VARIABLE CP

Z/BV	.1580	.3160	.6000	.8400	.9250
X/CV					
.000	.1716	.0555	.0370	-.0763	-.0024
.050	.1424	.1735	.1124	.1770	.0733
.150	.0692	.0844	-.0799	.0685	.0306
.300	-.0066	-.0629	-.0303	-.0353	-.0882
.520	-.1585	-.2301	-.2645	-.2717	-.2381
.685	-.2673	-.3650	-.3318	-.3129	-.2327
.775	-.1961	-.2166	-.1756	-.1754	-.1280
.900		-.1843	-.0843	-.0559	-.0556

ALPHAO(5) = 7.940 BETAO (5) = 8.220

SECTION (1)RIGHT VERTICAL DEPENDENT VARIABLE CP

Z/BV	.1580	.3160	.6000	.8400	.9250
X/CV					
.000	-.1384	-.4553	-.4548	-.4069	-.1725
.050	.3306	.3460	.2720	.3010	.1756
.150	.2283	.2238	.0759	.1836	.0988
.300	.1289	.0528	.0948	.0553	-.0404
.520	-.0843	-.1701	-.1727	-.2646	-.2331
.685	-.2756	-.3298	-.2593	-.3332	-.2845
.775	-.2142	-.1880	-.1734	-.2320	-.1920
.900		-.1856	-.1197	-.2062	-.1980

AFC11-716 TA14 (R+712-512N25 RIGHT VERTICAL (HB1R43) (15 FEB 74)

REFERENCE DATA

SREF = 2.4215 SQ. FT. XMRP = 29.5800 INCHES
LREF = 39.7090 INCHES YMRP = .0000 INCHES
BREF = 38.7090 INCHES ZMRP = .0000 INCHES
SCALE = .0500 SCALE

PARAMETRIC DATA

MACH = .850 ELEVON = .000
RUDDER = .000 SPOBRK = .000

ALPHAO(1) = -7.890 BETAO (1) = -8.020

SECTION (1)RIGHT VERTICAL DEPENDENT VARIABLE CP

Z/BV	.1580	.3160	.6000	.8400	.9250
X/CV					
.000	.1760	-.0055	.0462	.2127	.1523
.050	-.7714	-.9739	-.9948	-.5839	-.5124
.150	-.8466	-.9990	-.9178	-.5717	-.5316
.300	-.4224	-.9079	-.8628	-.5593	-.5344
.520	-.5779	-.4964	-.7643	-.5056	-.4554
.685	-.3208	-.4616	-.6235	-.4357	-.3699
.775	-.3156	-.3469	-.5597	-.4115	-.3443
.900		-.2800	-.4631	-.3786	-.3159

ALPHAO(1) = -7.780 BETAO (2) = -4.000

SECTION (1)RIGHT VERTICAL DEPENDENT VARIABLE CP

Z/BV	.1580	.3160	.6000	.8400	.9250
X/CV					
.000	.3682	.3065	.3801	.4311	.3672
.050	-.4787	-.6286	-.7374	-.8559	-.9278
.150	-.2595	-.3430	-.6067	-.7977	-.7521
.300	-.2592	-.3116	-.4677	-.6454	-.6604
.520	-.3421	-.3776	-.5178	-.5026	-.4437
.685	-.3359	-.5811	-.6017	-.4020	-.3349
.775	-.2999	-.4104	-.3515	-.2570	-.2328
.900		-.2370	-.1511	-.1303	-.1505

ALPHAO(1) = -7.780 BETAO (3) = .040

SECTION (1)RIGHT VERTICAL DEPENDENT VARIABLE CP

Z/BV	.1580	.3160	.6000	.8400	.9250
X/CV					
.000	.4478	.4882	.5599	.5374	.5382
.050	.0455	.0273	-.0854	-.0385	-.1405
.150	.0153	-.0162	-.2923	-.1082	-.1159
.300	-.0658	-.1552	-.1410	-.1724	-.1931
.520	-.2402	-.3009	-.3555	-.3809	-.3475
.685	-.3372	-.6235	-.9296	-.5600	-.5424

ORIGINAL PAGE IS OF POOR QUALITY

ARC11-716 IA14 O1+T12+S12N25 RIGHT VERTICAL (RB1R43)

ALPHAO(1) = -7.780 BETAO (3) = .040

SECTION (1)RIGHT VERTICAL DEPENDENT VARIABLE CP

X/CV \ Z/BV	.1580	.3160	.6000	.8400	.9250
.775	-.2615	-.3595	-.5343	-.3825	-.2504
.900		-.2704	-.2619	-.2127	-.1221

ALPHAO(1) = -7.850 BETAO (4) = 4.110

SECTION (1)RIGHT VERTICAL DEPENDENT VARIABLE CP

X/CV \ Z/BV	.1580	.3160	.6000	.8400	.9250
.000	.3620	.3161	.3487	.2676	.3415
.050	.3125	.2785	.1866	.2400	.0930
.150	.2017	.1802	-.0306	.1125	.0695
.350	.0927	-.0254	.0231	-.0192	-.0843
.525	-.1245	-.2700	-.2520	-.3259	-.3285
.685	-.3240	-.5702	-.6645	-.7782	-.6148
.775	-.2489	-.2624	-.3913	-.4032	-.2782
.900		-.2249	-.1866	-.1674	-.1126

ALPHAO(1) = -7.890 BETAO (5) = 8.170

SECTION (1)RIGHT VERTICAL DEPENDENT VARIABLE CP

X/CV \ Z/BV	.1580	.3160	.6000	.8400	.9250
.000	.1673	-.0042	.0079	-.0118	.1474
.050	.4980	.4643	.3859	.4063	.2542
.150	.3558	.3220	.1463	.2513	.1760
.350	.2243	.1206	.1403	.0853	-.0108
.525	-.0432	-.1591	-.1704	-.2798	-.3124
.685	-.3349	-.4727	-.6479	-.8539	-.8518
.775	-.2570	-.2312	-.3381	-.4813	-.3583
.900		-.2271	-.2737	-.3628	-.2713

AF 11-716 1A14 OB+512+512N25 RIGHT VERTICAL (RB1F43)

ALPHAC (1) = -3.080 BETAC (1) = -8.060

SECTION (1)RIGHT VERTICAL DEPENDENT VARIABLE CP

Z/BV	.1580	.3160	.6000	.8400	.9250
X/CV					
.000	.1355	-.0596	-.0410	.1062	.0561
.050	-.7949	1.0310	-.9931	-.5692	-.4999
.150	-.8891	-1.0629	-.9169	-.5623	-.5962
.300	-.6605	-.5460	-.8617	-.5436	-.5[illegible]
.520	-.6120	-.4363	-.7824	-.5013	-.4524
.695	-.2940	-.4019	-.6389	-.4458	-.3733
.775	-.2849	-.3251	-.5756	-.4165	-.357
.900		-.2911	-.4678	-.3945	-.3208

ALPHAC (2) = -3.080 BETAC (2) = -4.020

SECTION (1)RIGHT VERTICAL DEPENDENT VARIABLE CP

Z/BV	.1580	.3160	.6000	.8400	.9250
X/CV					
.000	.3027	.2490	.3061	.3443	.2753
.050	-.5476	-.6971	-.7159	-.8390	-.8075
.150	-.5019	-.5961	-.6196	-.8159	-.7349
.300	-.5096	-.5331	-.5084	-.6486	-.6654
.520	-.3562	-.3836	-.5463	-.4906	-.4409
.695	-.3215	-.5543	-.5435	-.4016	-.3302
.775	-.2914	-.4013	-.5103	-.2460	-.2327
.900		-.2388	-.1480	-.1138	-.1389

ALPHAC(2) = -3.640 BETAC (3) = .030

SECTION (1)RIGHT VERTICAL DEPENDENT VARIABLE CP

Z/BV	.1580	.3160	.6000	.8400	.9250
X/CV					
.000	.4040	.4285	.4990	.4838	.4724
.050	.0364	-.0140	-.1018	-.0843	-.1522
.150	-.0382	-.0514	-.3195	-.1230	-.1386
.300	-.1046	-.1087	-.1573	-.1841	-.2136
.520	-.2513	-.3093	-.5682	-.5928	-.5608
.695	-.3205	-.5752	-.8511	-.5389	-.4610
.775	-.2596	-.3326	-.4613	-.3478	-.2100
.900		-.2608	-.2015	-.1640	-.0841

ARC11-716 IA14 C4+T12+S12NB5 RIGHT VERTICAL (RB1R43)

ALPHAO(2) = -3.880 BETAO (4) = 4.090

SECTION (1)RIGHT VERTICAL DEPENDENT VARIABLE CP

Z/BV	.1580	.3160	.6000	.8400	.9250
X/CV					
.000	.5049	.2444	.2660	.1821	.2562
.050	.2495	.2322	.1544	.2119	.0520
.150	.1506	.1373	-.0578	.0901	.0391
.300	.0516	-.0432	.0067	-.0421	-.1151
.520	-.1557	-.2545	-.2670	-.3360	-.3307
.685	-.5169	-.5480	-.7715	-.6174	-.5120
.775	-.2436	-.2543	-.3560	-.3565	-.2251
.900		-.2263	-.1550	-.1204	-.0926

ALPHAO(2) = -3.300 BETAO (5) = 8.150

SECTION (1)RIGHT VERTICAL DEPENDENT VARIABLE CP

Z/BV	.1580	.3160	.6000	.8400	.9250
X/CV					
.000	.1234	-.0564	-.0894	.0969	.0636
.050	.4415	.4188	.3475	.3664	.2363
.150	.3529	.2877	.1115	.2177	.1439
.300	.1[illegible]7	.0925	.1127	.0620	-.0386
.520	-.0637	-.1737	-.1[illegible]77	.2911	-.3308
.685	-.3324	-.4642	-.5174	-.6506	-.7285
.775	-.2491	-.2316	-.3169	-.4483	-.3605
.900		-.2348	-.2467	-.3572	-.2775

ALPHA(3) = -.310 BETAO (1) = -8.080

SECTION (1)RIGHT VERTICAL DEPENDENT VARIABLE CP

Z/BV	.1580	.3160	.6000	.8400	.9250
X/CV					
.000	.0872	-.1243	-.1422	.0157	-.0159
.050	-.8226	-1.0670	-.9591	-.5545	-.4956
.150	-.9619	-1.1130	-.8912	-.5480	-.5008
.300	-.5233	-.9929	-.8206	-.5335	-.4950
.520	-.5907	-.4419	-.7512	-.4934	-.4566
.685	-.3149	-.4179	-.6283	-.4398	-.3778
.775	-.2785	-.3126	-.5715	-.4129	-.3548
.900		-.2490	-.4587	-.3771	-.3189

AR211-716 TA14 DI+712+512N23 RIGHT VERTICAL (RB1R43)

ALPHAC (1) = -.350 BETAC (2) = -5.040

SECTION (1)RIGHT VERTICAL DEPENDENT VARIABLE CP

Z/BV	.1580	.3180	.6000	.8400	.9250
X/CV					
.000	.2175	.1006	.1466	.1879	.1229
.050	-.6579	-.8717	-.8065	-.9108	-.6913
.150	-.4841	.8598	-.7815	-.9254	-.6482
.300	-.4521	-.3984	-.7496	.8245	.5494
.525	-.3712	-.3914	-.6795	-.4345	-.4117
.685	-.3151	-.5115	-.5106	.7757	-.3656
.775	.3012	-.3750	.5283	.5149	-.3195
.900		-.2539	-.1801	.9157	-.2542

ALPHAC (3) = -.340 BETAC (3) = .040

SECTION (1)RIGHT VERTICAL DEPENDENT VARIABLE CP

Z/BV	.1580	.3180	.6000	.8400	.9250
X/CV					
.000	.3828	.3706	.4442	.4046	.4096
.050	-.0155	-.0353	-.1170	-.0854	-.1748
.150	-.0751	-.0715	-.3225	-.1344	-.1475
.300	-.1292	-.1956	-.1642	-.1952	-.2218
.525	-.2598	-.3084	-.3739	-.4026	-.3605
.685	-.2913	-.5235	-.7542	-.5356	-.3987
.775	-.2454	-.3219	-.4034	-.3215	-.1867
.900		-.2512	-.1506	-.1225	-.0508

ALPHAC (3) = -.350 BETAC (4) = 4.090

SECTION (1)RIGHT VERTICAL DEPENDENT VARIABLE CP

Z/BV	.1580	.3180	.6000	.8400	.9250
X/CV					
.000	.2421	.1921	.2002	.1125	.1868
.050	.2041	.2002	.1227	.1858	.0287
.150	.1102	.1056	-.0795	.0647	.0155
.300	.0143	-.0811	-.0200	-.0635	-.1331
.525	-.1662	-.2465	-.2778	-.3417	-.3207
.685	-.3176	-.5226	-.6093	-.5412	-.4129
.775	-.2541	-.2564	-.3125	-.3272	-.1985
.900		-.2275	-.1448	-.1165	-.0734

ORIGINAL PAGE IS OF POOR QUALITY

ARC11-716 IA14 O1+T12+S12N25 RIGHT VERTICAL (RB1R43)

ALPHAO(3) = -.340 BETAO (5) = 8.150

SECTION (1)RIGHT VERTICAL DEPENDENT VARIABLE CP

Z/BV	.1580	.3160	.6000	.8400	.9250
X/CV					
.000	.0940	-.1044	-.1689	-.1798	-.0140
.050	.3963	.3829	.3111	.3349	.2096
.150	.2754	.2556	.0850	.1973	.1175
.300	.1646	.0665	.0899	.0447	-.0534
.520	-.0757	-.1828	-.1996	-.3080	-.3203
.685	-.3227	-.4516	-.4512	-.5561	-.6269
.775	-.2484	-.2301	-.2826	-.4081	-.3133
.900		-.2269	-.2259	-.3467	-.2715

ALPHAO(4) = 4.130 BETAO (1) = -8.090

SECTION (1)RIGHT VERTICAL DEPENDENT VARIABLE CP

Z/BV	.1580	.3160	.6000	.8400	.9250
X/CV					
.000	.0183	-.1985	-.2393	-.0973	-.1225
.050	-.8983	-1.1080	-.9518	-.5718	-.4750
.150	-1.0350	-1.1610	-.9593	-.5612	-.4696
.300	-.5804	-.9405	-.9522	-.5185	-.4452
.520	-.3109	-.3848	-.8425	-.4509	-.4088
.685	-.2571	-.3612	-.6604	-.4120	-.3357
.775	-.2545	-.2563	-.5329	-.3974	-.3169
.900		-.2373	-.3393	-.3644	-.2865

ALPHAO(4) = 4.050 BETAO (2) = -4.020

SECTION (1)RIGHT VERTICAL DEPENDENT VARIABLE CP

Z/BV	.1580	.3160	.6000	.8400	.9250
X/CV					
.000	.2121	.1355	.1765	.1910	.1284
.050	-.5740	-.7066	-.6487	-.7889	-.7258
.150	-.3457	-.5686	-.6338	-.7860	-.6656
.300	-.3294	-.3364	-.5212	-.6166	-.6393
.520	-.3135	-.3506	-.4752	-.5944	-.3834
.685	-.2521	-.4125	-.4288	-.3760	-.2616
.775	-.2255	-.2888	-.2507	-.2106	-.1510
.900		-.2233	-.1188	-.0640	-.0632

ARC11-7.6 TA14 O1+T12+S12N25 RIGHT VERTICAL (RB1R43)

ORIGINAL PAGE IS OF POOR QUALITY

ALPHAO(4) = 4.050 BETAO (3) = .030

SECTION 1)RIGHT VERTICAL DEPENDENT VARIABLE CP

Z/BV	.1580	.3160	.6000	.8400	.9250
X/CV					
.000	.3316	.3364	.3943	.3442	.3542
.050	-.0640	-.0613	-.1205	-.0910	-.1905
.150	-.1001	-.0932	-.3315	-.1356	-.1531
.300	-.1398	-.2022	-.1619	-.1865	-.2245
.520	-.2479	-.2969	-.3597	-.3946	-.3339
.685	-.2577	-.4771	-.6518	-.4893	-.3507
.775	-.2254	-.2947	-.3577	-.2434	-.1512
.900		-.2206	-.1016	-.0828	-.0128

ALPHAO(4) = 4.140 BETAO (4) = 4.140

SECTION (1)RIGHT VERTICAL DEPENDENT VARIABLE CP

Z/BV	.1580	.3160	.6000	.8400	.9250
X/CV					
.000	.2114	.1261	.1275	.0281	.0932
.050	.1560	.1811	.1144	.1712	.0370
.150	.0838	.0953	-.0859	.0588	.0023
.300	.0023	-.0553	-.0306	-.0622	-.1258
.520	-.1536	-.2315	-.2668	-.3209	-.2947
.685	-.3006	-.4610	-.5070	-.4366	-.3313
.775	-.2302	-.2508	-.2714	-.2745	-.1584
.900		-.2261	-.1209	-.0981	-.0651

ALPHAO(4) = 4.150 BETAO (5) = 8.190

SECTION (1)RIGHT VERTICAL DEPENDENT VARIABLE CP

Z/BV	.1580	.3160	.6000	.8400	.9250
X/CV					
.000	.0168	-.1950	-.2808	-.3006	-.1108
.050	.3600	.3605	.2852	.3093	.1821
.150	.2505	.2386	.0740	.1808	.1011
.300	.1465	.0524	.0845	.0402	-.0623
.520	-.0701	-.1824	-.1967	-.2957	-.3005
.685	-.3078	-.4086	-.3598	-.4394	-.5056
.775	-.2361	-.2184	-.2208	-.3473	-.2635
.900		-.2075	-.1796	-.3004	-.2521

ARC11-716 IA14 O1+T12+S12N25 RIGHT VERTICAL (RB1R43)

ALPHAO(5) = 8.040 BETAO (1) = -8.070

SECTION (1)RIGHT VERTICAL DEPENDENT VARIABLE CP

Z/BV	.1580	.3160	.6000	.8400	.9250
X/CV					
.000	-.0162	-.2682	-.3173	-.2260	-.2365
.050	-.9619	-1.1380	-.8950	-.6153	-.4867
.150	-.5976	-1.1720	-.9411	-.5906	-.4702
.300	-.6049	-.7317	-.9503	-.5429	-.4316
.520	-.3327	-.2620	-.8737	-.4680	-.3831
.685	-.2520	-.2842	-.6260	-.4192	-.3386
.775	-.2265	-.2369	-.4520	-.4068	-.2952
.900		-.2389	-.1978	-.3930	-.2727

ALPHAO(5) = 8.010 BETAO (2) = -4.020

SECTION (1)RIGHT VERTICAL DEPENDENT VARIABLE CP

Z/BV	.1580	3160	.6000	.8400	.9250
X/CV					
.000	.1892	.0888	.1160	.1116	.0503
.050	-.4319	-.7060	-.6340	-.7595	-.6988
.150	-.2960	-.4594	-.6372	-.7733	-.6423
.300	-.3134	-.3381	-.5277	-.6007	-.6192
.520	-.3061	-.3227	-.4378	-.3569	-.3228
.685	-.2481	-.3724	-.4042	-.3312	-.2252
.775	-.2184	-.2607	-.2222	-.1753	-.1249
.900		-.2206	-.0959	-.0459	-.0354

ALPHAO(5) = 6.010 BETAO (3) = .030

SECTION (1)RIGHT VERTICAL DEPENDENT VARIABLE CP

Z/BV	.1580	.3160	.6000	.8400	.9250
X/CV					
.000	.2930	.2880	.3492	.2947	.3051
.050	-.1067	-.0826	-.1234	-.0924	-.1842
.150	-.1124	-.0941	-.3315	-.1284	-.1492
.300	-.1509	-.2078	-.1649	-.1844	-.2159
.520	-.2385	-.2903	-.3467	-.3688	-.3093
.685	-.2383	-.4330	-.5608	-.4418	-.3067
.775	-.2128	-.2753	-.2951	-.2404	-.1186
.900		-.2132	-.0949	-.0662	.0092

ARC11-716 TA14 C1+T12+S12M25 RIGHT VERTICAL (RB1R43)

ALPHAC (4) = 8.000 BETAO (4) = 4.130

SECTION 1)RIGHT VERTICAL DEPENDENT VARIABLE CP

Z/BV	.1580	.3160	.6000	.8400	.9250
X/CV					
.000	.1874	.0899	.0574	-.0577	.0058
.050	.0760	.1556	.1131	.1580	.0361
.150	.0293	.0774	-.0791	.0470	-.0024
.300	-.0243	-.0662	-.0303	-.0579	-.1337
.520	-.1587	-.2213	-.2636	-.3086	-.2782
.685	-.2814	-.4442	-.4660	-.3748	-.3111
.775	-.2931	-.2388	-.2425	-.2355	-.1530
.900		-.2149	-.1164	-.0851	-.0462

ALPHAC (5) = 8.090 BETAO (5) = 8.250

SECTION (1)RIGHT VERTICAL DEPENDENT VARIABLE CP

Z/BV	.1580	.3160	.6000	.8400	.9250
X/CV					
.000	-.0204	-.2565	-.3495	-.4171	-.1932
.050	.2911	.3190	.2629	.2791	.1650
.150	.1955	.2132	.0525	.1741	.0863
.300	.1065	.0408	.0754	.0345	-.0646
.520	-.0768	-.1663	-.1957	-.2964	-.2795
.685	-.3006	-.4001	-.3668	-.3952	-.3691
.775	-.2408	-.2314	-.2210	-.2387	-.2109
.900		-.2289	-.1691	-.2471	-.2352

ARC11-718 IA14 OL+T12+S12N25 RIGHT VERTICAL (RB1R44) (15 FEB 74)

REFERENCE DATA

SREF =	2.4210	SQ.FT.	XMRP =	29.5800	INCHES
LREF =	38.7090	INCHES	YMRP =	.0000	INCHES
BREF =	38.7090	INCHES	ZMRP =	.0000	INCHES
SCALE =	.0300	SCALE			

PARAMETRIC DATA

MACH =	.900	ELEVON =	.000
RUDDER =	.000	SPDBRK =	.000

ALPHAO(1) = -7.970 BETAO (1) = -8.050

SECTION (1)RIGHT VERTICAL DEPENDENT VARIABLE CP

Z/BV	.1580	.3160	.6000	.8400	.9250
X/CV					
.000	.2461	.1074	.1448	.2335	.1489
.050	-.6524	-.9304	-1.0980	-.7216	-.6152
.150	-.7159	-.8587	-1.0930	-.7227	-.6142
.300	-.5511	-.7994	-1.0030	-.7022	-.5869
.520	-.5317	-.6151	-.8219	-.6053	-.5125
.685	-.4858	-.6410	-.6861	-.5025	-.4138
.775	-.3203	-.5333	-.6169	-.4640	-.3962
.900		-.3561	-.4382	-.4172	-.3631

ALPHAO(1) = -7.960 BETAO (2) = -4.000

SECTION (1)RIGHT VERTICAL DEPENDENT VARIABLE CP

Z/BV	.1580	.3160	.6000	.8400	.9250
X/CV					
.000	.3990	.3569	.4114	.4536	.3844
.050	-.4138	-.6535	-.8261	-.8264	-.9834
.150	-.1931	-.5026	-.6788	-.7414	-.8938
.300	-.3082	-.3486	-.5019	-.6155	-.6760
.520	-.3697	-.3268	-.4491	-.5338	-.4082
.685	-.4043	-.6403	-.9456	-.3721	-.3182
.775	-.3015	-.4653	-.4959	-.2920	-.2576
.900		-.3393	-.2764	-.2102	-.1817

ALPHAO(1) = -7.980 BETAO (3) = .050

SECTION (1)RIGHT VERTICAL DEPENDENT VARIABLE CP

Z/BV	.1580	.3160	.6000	.8400	.9250
X/CV					
.000	.4941	.4900	.5673	.5414	.5453
.050	.0999	.0231	-.0818	-.0085	-.1608
.150	.0194	-.0031	-.2918	-.0851	-.0982
.300	-.0559	-.0947	-.1183	-.1438	-.1745
.520	-.2007	-.2698	-.3034	-.3290	-.3494
.685	-.3929	-.7121	-1.1710	-.7944	-.6795

ARC11-716 TA14 01+T12+S12N25 RIGHT VERTICAL (RB1R44)

ALPHAO(1) = -7.980 BETAO (3) = .050

SECTION (1)RIGHT VERTICAL DEPENDENT VARIABLE CP

Z/BV	.1580	.3160	.6000	.8400	.9250
X/CV					
.775	-.2995	-.4476	-.6615	-.5520	-.3533
.900		-.3424	-.4238	-.3440	-.2310

ALPHAO(1) = -7.970 BETAO (4) = 4.100

SECTION (1)RIGHT VERTICAL DEPENDENT VARIABLE CP

Z/BV	.1580	.3160	.6000	.8400	.9250
X/CV					
.000	.3987	.3652	.3787	.3132	.3664
.050	.3011	.2672	.1909	.2414	.0942
.150	.2007	.1790	-.0291	.1232	.0741
.300	.1020	.0530	.0437	-.0116	-.0702
.520	-.0987	-.1722	-.2042	-.2846	-.3593
.685	-.3567	-.6796	-1.1570	-.9769	-.6863
.775	-.2678	-.3489	-.6433	-.5762	-.4501
.900		-.2831	-.3190	-.3594	-.2439

ALPHAO(1) = -8.000 BETAO (5) = 8.170

SECTION (1)RIGHT VERTICAL DEPENDENT VARIABLE CP

Z/BV	.1580	.3160	.6000	.8400	.9250
X/CV					
.000	.2414	.1034	.1098	.0212	.1503
.050	.5033	.4742	.3797	.4038	.2673
.150	.3714	.3363	.1329	.2577	.1844
.300	.2441	.1710	.1515	.1052	.0053
.520	-.0080	-.1219	-.1410	-.2223	-.3587
.685	-.3621	-.5111	-1.0380	-.9657	-.9815
.775	-.3020	-.2738	-.4859	-.9465	-.9809
.900		-.2585	-.3061	-.4812	-.3274

ORIGINAL PAGE IS OF POOR QUALITY

ARC11-716 IA14 O1+T12+S12N25 RIGHT VERTICAL (RB1R44)

ALPHAO(2) = -4.070 BETAO (1) = -3.080

SECTION (1)RIGHT VERTICAL DEPENDENT VARIABLE CP

Z/BV	.1580	.3160	.6000	.8400	.9250
X/CV					
.000	.2080	.0577	.0672	.1275	.0505
.050	-.6570	-.8807	-1.1180	-.7276	-.6022
.150	-.7500	-.9164	-1.1140	-.7102	-.6044
.300	-.4086	-.8245	-1.0280	-.7027	-.5685
.520	.5909	-.6155	-.8416	-.5948	-.5215
.685	-.4696	-.5113	-.6892	-.5093	-.4245
.775	-.3120	-.4857	-.5997	-.4719	-.3915
.900		-.3229	-.4928	-.4176	-.3658

ALPHAO(2) = -3.970 BETAO (2) = -4.030

SECTION (1)RIGHT VERTICAL DEPENDENT VARIABLE CP

Z/BV	.1580	.3160	.6000	.8400	.9250
X/CV					
.000	.3409	.2842	.3187	.3670	.3034
.050	-.4629	-.7139	-.8750	-.8110	-.7768
.150	-.2330	-.5049	-.7232	-.8084	-.7245
.300	-.3769	-.4099	-.5576	-.6877	-.6735
.520	-.4291	-.4208	-.4294	-.5429	-.4919
.685	-.3543	-.3101	-.9642	-.4007	-.3405
.775	-.2982	-.4346	-.4925	-.3017	-.3061
.900		-.3187	-.2305	-.2328	-.2301

ALPHAO(2) = -3.88 BETAO (3) = .030

SECTION (1)RIGHT VERTICAL DEPENDENT VARIABLE CP

Z/BV	.1580	.3160	.6000	.8400	.9250
X/CV					
.000	.4087	.3979	.4974	.4661	.4747
.050	.0342	-.0412	-.1013	-.0435	-.1406
.150	-.0844	-.0542	-.3185	-.1114	-.1198
.300	-.1221	-.1391	-.1438	-.1717	-.1969
.520	-.2336	-.2880	-.3265	-.3485	-.3703
.685	-.3772	-.6430	-1.1670	-.6993	-.4942
.775	-.2915	-.3970	-.6070	-.4400	-.2994
.900		-.3396	-.3694	-.3038	-.1946

ASCII 716 TA14 08+T12+S12+25 RIGHT VERTICAL (RB1R44)

ALPHAO (2) = -3.920 BETAO (4) = 4.080

SECTION (1)RIGHT VERTICAL DEPENDENT VARIABLE CP

Z/B	.1580	.3160	.6000	.8400	.9250
X/CV					
.000	.3398	.2943	.2895	.2152	.2860
.050	.2281	.2161	.1419	.2140	.0515
.150	.1413	.1299	-.0734	.1006	.0416
.350	.0445	.0051	.0125	-.0302	-.1055
.520	-.1426	-.1991	-.2262	-.2996	-.3804
.685	-.3431	-.6110	-1.1350	-.9865	-.6894
.775	-.2671	-.3201	-.5469	-.6900	-.4243
.900		-.2840	-.2630	-.3362	-.2227

ALPHAO(2) = -5.930 BETAO (5) = 8.150

SECTION (1)RIGHT VERTICAL DEPENDENT VARIABLE CP

Z/B	.1580	.3160	.6000	.8400	.9250
X/CV					
.000	.1918	.0473	.0206	-.0800	.0498
.050	.4457	.4231	.3321	.3547	.2345
.150	.3213	.2941	.0899	.2173	.1395
.350	.2029	.1316	.1118	.0600	-.0307
.520	-.0370	-.1481	-.1731	-.2601	-.3671
.685	-.3677	-.4895	-.8601	-.9559	-1.0070
.775	-.2906	-.2841	-.4347	-.6930	-.8092
.900		-.2654	-.2790	-.4860	-.3318

ALPHAO(3) = .080 BETAO (1) = -8.080

SECTION (1)RIGHT VERTICAL DEPENDENT VARIABLE CP

Z/BV	.1580	.3160	.6000	.8400	.9250
X/CV					
.000	.1871	.0011	-.0228	.0178	-.0437
.090	-.9933	-.9285	-1.1370	-.6982	-.5592
.150	-.7969	-.9668	-1.1480	-.6716	-.5590
.300	-.4550	-.8489	-1.0840	-.6446	-.5319
.520	-.6423	-.5980	-.8502	-.5679	-.5091
.685	-.4131	-.5533	-.6554	-.4996	-.4259
.775	-.2973	-.4178	-.5746	-.4651	-.3915
.900		-.2832	-.4643	-.4217	-.3530

ORIGINAL PAGE IS OF POOR QUALITY

ARC11-716 IA14 OL+T12+S12N25 RIGHT VERTICAL (RB1R44)

ALPHAC(3) = -.320 BETAC (2) = -4.030

SECTION (1)RIGHT VERTICAL DEPENDENT VARIABLE CP

X/CV \ Z/BV	.1580	.3160	.6000	.8400	.9250
.000	.2917	.2102	.2406	.2759	.2150
.050	-.5172	-.7676	-.9208	-.7826	-.7001
.150	-.5045	-.5540	-.8348	-.7873	-.6463
.300	-.4570	-.4649	-.6176	-.7170	-.5687
.520	-.4791	-.4206	-.3997	-.5539	-.4291
.685	-.3400	-.4550	-.8839	-.3795	-.3516
.775	-.2918	-.3755	-.4006	-.3181	-.2940
.900		-.2980	-.1640	-.2662	-.2277

ALPHAC(3) = -.320 BETAC (3) = .050

SECTION (1)RIGHT VERTICAL DEPENDENT VARIABLE CP

X/CV \ Z/BV	.1580	.3160	.6000	.8400	.9250
.000	.3553	.3553	.4406	.4095	.4165
.050	-.0441	-.1383	-.1439	-.0768	-.1833
.150	-.1439	-.1066	-.3425	-.1306	-.1446
.300	-.1776	-.1704	-.1658	-.1871	-.2178
.520	-.2597	-.2937	-.5461	-.3670	-.3932
.685	-.3270	-.5695	-1.0600	-.6506	-.4110
.775	-.2614	-.3624	-.5507	-.4196	-.2850
.900		-.3107	-.2769	-.2893	-.1634

ALPHAC(3) = -.330 BETAC (4) = 4.100

SECTION (1)RIGHT VERTICAL DEPENDENT VARIABLE CP

X/CV \ Z/BV	.1580	.3160	.6000	.8400	.9250
.000	.3026	.2360	.2086	.1512	.2132
.050	.1708	.1570	.1105	.1970	.0346
.150	.0883	.0827	-.0923	.0813	.0118
.300	.0007	-.0243	-.0109	-.0465	-.1332
.520	-.1617	-.2188	-.2458	-.3023	-.3997
.685	-.3569	-.5540	-1.0100	-.8979	-.5856
.775	-.2727	-.3040	-.4953	-.5767	-.3970
.900		-.2936	-.2177	-.2853	-.2142

AFC11-716 TA14 OA+712+512N25 RIGHT VERTICAL (RB1R44)

ALPHA(3) = -.330 BETA(5) = 8.150

SECTION (1)RIGHT VERTICAL DEPENDENT VARIABLE CP

X/CV \ Z/BV	.1580	.3160	.6000	.8400	.9250
.000	.1938	.0070	-.0651	-.1634	-.0299
.050	.4024	.3836	.2951	.3181	.1952
.150	.2834	.2628	.0604	.1962	.1076
.300	.1[illegible]	.1046	.0839	.0453	-.0599
.520	-.[illegible]506	-.1558	-.1921	-.2748	-.3833
.685	-.[illegible]996	-.4417	-.6524	-.6917	-.9791
.775	-.2982	-.2717	-.3915	-.5289	-.5703
.900		-.2688	-.2425	-.4663	-.3030

ALPHA(4) = 4.200 BETA(1) = -8.100

SECTION (1)RIGHT VERTICAL DEPENDENT VARIABLE CP

X/CV \ Z/BV	.1580	.3160	.6000	.8400	.9250
.000	.0960	-.0680	-.1368	-.0935	-.1432
.050	-.7796	-.9643	-1.0920	-.6679	-.5188
.150	-.8531	-1.0030	-1.1210	-.6432	-.5178
.300	-.5052	-.8887	-1.1250	-.5950	-.4781
.520	-.5431	-.5175	-.9197	-.5174	-.4756
.685	-.3456	-.4497	-.6161	-.4645	-.4068
.775	-.2596	-.3404	-.4910	-.4441	-.3787
.900		-.2378	-.3600	-.4191	.3465

ALPHA(4) = 4.190 BETA(2) = -4.020

SECTION (1)RIGHT VERTICAL DEPENDENT VARIABLE CP

X/CV \ Z/BV	.1580	.3160	.6000	.8400	.9250
.000	.2445	.1700	.1622	.2135	.1330
.050	-.5016	-.8213	-.8853	-.7330	-1.0130
.150	-.3396	-.5600	-.8089	-.7548	-.7009
.300	-.4223	-.5034	-.6115	-.6690	-.6216
.520	-.4379	-.2782	-.3771	-.4679	-.3838
.685	-.2782	-.4277	-.8064	-.5139	-.2260
.775	-.2443	-.3142	-.3270	-.2389	-.1472
.900		-.2733	-.0832	-.1460	-.0783

ARC11-716 TA14 01+T12+S12N25 RIGHT VERTICAL (B1P441)

ALPHAC(4) = 4.080 BETAC (3) = .040

SECTION (1)RIGHT VERTICAL DEPENDENT VARIABLE CP

X/CV \ Z/BV	.1580	.3160	.6000	.8400	.9250
.000	.3525	.2649	.3751	.3438	.3580
.050	-.1090	-.1261	-.1157	-.0840	-.1859
.150	-.1931	-.1117	-.3292	-.1297	-.1452
.300	-.2137	-.1816	-.1542	-.1845	-.2166
.525	[illegible]	[illegible]	-.3431	-.3671	-.3911
.645	-.2748	[illegible]	-.7569	-.5204	-.3462
.775	-.2277	[illegible]	-.4568	-.3455	-.2188
.900		-.2722	.1983	-.2016	-.0999

ALPHAC(4) = 4.100 BETAC (4) = 4.110

SECTION (1)RIGHT VERTICAL DEPENDENT VARIABLE CP

X/CV \ Z/BV	.1580	.3160	.6000	.8400	.9250
.025	.2243	.1792	.1230	.0671	.1140
.050	.1128	.1428	[illegible]	.1701	.0285
.150	.0353	.0671	[illegible]	.0563	-.0136
.300	-.0234	-.0404	[illegible]	-.0626	-.1577
.525	-.1590	-.2129	-.2557	-.3156	-.3613
.645	-.3343	[illegible]	-.7082	-.6856	-.5241
.775	-.2559	.2982	-.4254	-.4419	-.3524
.900		-.2848	-.1714	-.2196	-.1296

ALPHAC(4) = 4.100 BETAC (5) = 8.190

SECTION (1)RIGHT VERTICAL DEPENDENT VARIABLE CP

X/CV \ Z/BV	.1580	.3160	.6000	.8400	.9250
.000	.0865	-.0737	-.1813	-.2875	-.1317
.050	.3515	.3497	.2609	.2964	.1633
.150	.2448	.2301	.0435	.1729	.0880
.300	.1433	.0851	.0681	.0304	-.0780
.520	-.0833	-.1810	-.1902	-.2885	-.3620
.645	-.3578	-.4802	-.5690	-.5694	-.6462
.775	-.2767	-.2274	-.3225	-.4009	-.4181
.900		-.2697	-.2042	-.4256	-.2644

ARC11-716 (A14 OL+T12+S12N25 RIGHT VERTICAL (RB1R44)

ALPHA0(5) = 0.040 BETA0 (1) = -8.080

SECTION 1)RIGHT VERTICAL DEPENDENT VARIABLE CP

Z/SV	.1580	.3160	.6000	.8400	.9250
X/CV					
.000	.0699	-.1621	-.2545	-.1895	-.2240
.050	-.7810	1.0400	-1.0100	-.5967	-.4848
.150	-.4895	1.0520	-1.0260	-.5595	-.4619
.300	-.5929	-.7544	-1.0490	-.5274	-.4399
.520	-.4162	-.3221	-.9555	.4756	-.4179
.685	-.2795	-.2668	-.3670	-.4618	-.3926
.775	-.2457	-.2668	-.1943	-.4415	-.3579
.900		-.2543	-.1255	-.4107	-.3309

ALPHA0(5) = 7.930 BETA0 (2) = -4.020

SECTION (1)RIGHT VERTICAL DEPENDENT VARIABLE CP

Z/SV	.1580	.3160	.6000	.8400	.9250
X/CV					
.000	.1857	.0937	.1276	.1297	.0620
.050	-.4082	-.7539	-.6961	-.7545	-.8671
.150	-.5249	-.4874	-.6495	-.7742	-.7108
.300	-.3702	-.3073	-.5406	-.6659	-.6991
.520	-.3209	-.3505	-.4564	-.4596	-.4080
.685	-.2658	-.3963	-.5766	-.3006	-.2339
.775	-.2319	-.2953	-.2834	-.1742	-.1335
.900		-.2472	-.1083	-.0559	-.0486

ALPHA0(5) = 7.970 BETA0 (3) = .020

SECTION (1)RIGHT VERTICAL DEPENDENT VARIABLE CP

Z/SV	.1580	.3160	.6000	.8400	.9250
X/CV					
.000	.2007	.1985	.3420	.2953	.3051
.050	-.1498	-.1491	-.1539	-.0826	-.2008
.150	-.1561	-.1215	-.3450	-.1261	-.1508
.300	-.1914	-.1668	-.1659	-.1851	-.2337
.520	-.2521	-.2799	-.3515	-.3740	-.4061
.685	-.2572	-.4285	-.6678	-.5219	-.3185
.775	-.2299	-.2953	-.4144	-.3564	-.2105
.900		-.2472	-.1296	-.1856	-.0793

ARC11-716 IA14 C4+T12+S12N25 RIGHT VERTICAL (SB1R44)

ALPHA(0) (S) = 8.020 BETA(0) (S) = 4.130

SECTION - 1 (RIGHT VERTICAL) DEPENDENT VARIABLE CP

X/CV	Z/BV .1580	.3160	.6000	.8400	.9250
.000	[illegible]	.0984	.0625	-.0244	.0267
.050	[illegible]	[illegible]	.1068	.1524	.0191
.150	[illegible]	[illegible]	-.0929	.0443	.0273
.300	[illegible]	-.411	-.0299	-.0668	-.1698
.525	.1746	[illegible]	-.2861	.3273	-.3645
.675	[illegible]	[illegible]	-.6445	-.5122	-.4269
.775	[illegible]	[illegible]	-.3794	-.3562	.2575
.975		[illegible]	-.1496	-.1443	.0663

ALPHA(0) (S) = [illegible] BETA(0) (S) = 8.230

SECTION - 1 (RIGHT VERTICAL) DEPENDENT VARIABLE CP

X/CV	Z/BV [illegible]	[illegible]	.6000	.8400	.9250
[illegible]	.0605	-.1511	-.2955	.4092	-.1943
[illegible]	.2475	.3035	.2484	.2738	.1613
[illegible]	[illegible]	.1347	[illegible]	.1599	.0789
.300	[illegible]	[illegible]	[illegible]	.0345	-.0777
.525	-.1613	-.1449	[illegible]	-.2715	-.3134
[illegible]	.3545	[illegible]	[illegible]	-.4152	-.5127
[illegible]	.2530	[illegible]	-.2595	-.3172	-.2587
[illegible]		.2756	-.1946	-.2473	-.2390

RC11-716 TA14 01+T12+S12N25 RIGHT VERTICAL (RB1R45) (20 FEB 74)

REFERENCE DATA

SREF = 2.4210 SQ.FT. XMRP = 29.5800 INCHES
LREF = 38.7500 INCHES YMRP = .0000 INCHES
BREF = 38.7500 INCHES ZMRP = .0000 INCHES
SCALE = .0500 SCALE

PARAMETRIC DATA

MACH = .950 ELEVON = .000
RUDDER = .000 SPOILER = .000

ALPHAO(1) = -7.470 BETAO (1) = -5.014

SECTION (1)RIGHT VERTICAL DEPENDENT VARIABLE CP

Z/BV	.1580	.3160	.6000	.8400	.9250
X/CV					
.000	.2997	.1716	.2105	.2813	.1766
.090	.5378	-.7362	-.9893	-1.0180	-.9160
.190	-.6128	-.7597	-.9681	-1.0241	-.8918
.300	-.2941	-.6913	-.9066	[illegible]	-.8426
.520	-.4555	-.5397	-.8885	-.6999	-.6799
.645	-.5092	-.6666	-.8922	-.6182	-.5698
.775	-.3526	-.6467	-.7517	-.5989	-.5356
.900		-.5243	-.6347	-.5595	-.4725

ALPHAO(1) = -7.770 BETAO (2) = -4.010

SECTION (1)RIGHT VERTICAL DEPENDENT VARIABLE CP

Z/BV	.1580	.3160	.6000	.8400	.9250
X/CV					
.000	.4465	.4007	.4445	.4748	.4109
.090	-.3337	-.5739	-.7753	-.9590	-1.1140
.190	-.1212	-.4137	-.6003	-.7607	-.7473
.300	-.2473	-.2884	-.4844	-.6102	-.5421
.520	-.3148	-.5419	-.4337	-.5313	-.4557
.645	-.4928	-.7432	-.9726	-.8907	-.8865
.775	-.3617	-.5180	-.7605	-.6553	-.6799
.900		-.4946	-.4681	-.4995	-.4245

ALPHAO(1) = -7.780 BETAO (3) = .040

SECTION (1)RIGHT VERTICAL DEPENDENT VARIABLE CP

Z/BV	.1580	.3160	.6000	.8400	.9250
X/CV					
.000	.5117	.9003	.5835	.5528	.5593
.090	.1302	-.0065	-.0916	.0277	-.1554
.190	.0312	.0406	-.2489	-.0523	-.0549
.300	-.0511	-.0825	-.0832	-.1141	-.1321
.520	-.1912	-.0166	-.2526	-.2629	-.3057
.645	-.4131	-.8064	-1.0080	-.9579	-.9662

ARC11-716 IA14 C1+T12+S12N25 RIGHT VERTICAL (RB1R45)

ALPHAO(1) = -7.760 BETAO (3) = .040

SECTION (1)RIGHT VERTICAL DEPENDENT VARIABLE CP

Z/BV	.1580	.3160	.6000	.8400	.9250
X/CV					
.775	-.3243	-.4904	-.9642	-.9726	-.8782
.900		-.3844	-.4843	-.6120	-.3888

ALPHAO(1) = -7.900 BETAO (4) = 4.110

SECTION (1)RIGHT VERTICAL DEPENDENT VARIABLE CP

Z/BV	.1580	.3160	.6000	.8400	.9250
X/CV					
.000	.4421	.4136	.4130	.3422	.3979
.050	.3217	.2999	.2232	.2651	.1661
.150	.2234	.2020	.0044	.1555	.1003
.300	.1957	.0782	.0712	.0242	-.0426
.520	-.0529	-.1217	-.1573	-.2322	-.3344
.675	-.4066	-.7626	-.9817	.3416	-.3650
.775	-.3347	-.4465	-.9037	.3274	-.3522
.900		-.3407	-.5348	-.3019	-.4629

ALPHAO(1) = -7.930 BETAO (5) = 8.180

SECTION (1)RIGHT VERTICAL DEPENDENT VARIABLE CP

Z/BV	.1580	.3160	.6000	.8400	.9250
X/CV					
.000	.2963	.1782	.1814	.1084	.1955
.050	.5248	.4959	.4236	.4216	.3265
.150	.3969	.3670	.1699	.2829	.2095
.300	.2774	.2146	.1840	.1290	.0442
.520	.0484	-.0580	-.0868	-.1625	-.3108
.675	-.3858	-.6191	-.9330	-.8934	-.9131
.775	-.3375	-.3775	-.8103	-.8647	-.8921
.900		-.2685	-.3219	-.8137	-.8778

ARC11-718 TA14 01+T12+S12N25 RIGHT VERTICAL (RB1R45)

ALPHAO(2) = -4.020 BETAO (1) = -8.080

SECTION (1)RIGHT VERTICAL DEPENDENT VARIABLE CP

X/CV \ Z/BV	.1580	.3160	.6000	.8400	.9250
.000	.2702	.1331	.1394	.1788	.0832
.050	-.5475	-.7733	-1.0130	-1.0200	-.9636
.150	-.6362	-.8035	-.9935	-.9827	-.8783
.300	-.3335	-.7009	-.9259	-.8837	-.7933
.520	-.5084	-.5515	-.9003	-.7046	-.6620
.685	-.5686	-.6403	-.8596	-.6207	-.5494
.775	-.3395	-.6392	-.7428	-.5921	-.4976
.900		-.4754	-.6197	-.5534	-.4687

ALPHAO(2) = -3.960 BETAO (2) = -4.030

SECTION (1)RIGHT VERTICAL DEPENDENT VARIABLE CP

X/CV \ Z/BV	.1580	.3160	.6000	.8400	.9250
.000	.3978	.3390	.3684	.3845	.3236
.050	-.3844	-.6227	-.8223	-.8975	-.9518
.150	-.1655	-.3758	-.6633	-.7720	-.8591
.300	-.3117	-.3595	-.4809	-.6269	-.6752
.520	-.3818	-.3859	-.4454	-.5488	-.4670
.685	-.5247	-.6255	-1.0080	-.8362	-.7568
.775	-.3301	-.5135	-.6105	-.5938	-.5012
.900		-.4776	-.4794	-.4517	-.3519

ALPHAO(2) = -3.870 BETAO (3) = .010

SECTION (1)RIGHT VERTICAL DEPENDENT VARIABLE CP

X/CV \ Z/BV	.1580	.3160	.6000	.8400	.9250
.000	.4453	.4024	.4977	.4599	.4687
.050	.0778	-.1069	-.1399	-.0455	-.1578
.150	-.0494	-.0927	-.3133	-.1100	-.1157
.300	-.1728	-.1206	-.1379	-.1785	-.1802
.520	-.1992	-.2628	-.3081	-.3092	-.3455
.685	-.4095	-.7885	-1.0350	-.9786	-.9292
.775	-.3215	-.4738	-.9741	-.7279	-.6701
.900		-.3966	-.4880	-.4491	-.3463

ARC11-716 IA14 O1+T12+S12N25 RIGHT VERTICAL (BIR45)

ALPHAO(2) = -3.940 BETAO (4) = 4.090

SECTION (1)RIGHT VERTICAL DEPENDENT VARIABLE CP

Z/BV	.1580	.3160	.6000	.8400	.9250
X/CV					
.000	.3878	.3524	.3324	.2492	.3068
.050	.2459	.2103	.1630	.2183	.1264
.150	.1458	.1376	-.0532	.1114	.0562
.300	.0625	.0303	.0224	-.0134	-.0851
.520	-.0952	-.1521	-.1902	-.2614	-.3755
.685	-.4070	-.7514	-.9909	-.9461	-.9724
.775	-.3513	-.4205	-.9142	-.9535	-.9770
.900		-.3058	-.4543	-.8264	-.4401

ALPHAO(2) = -3.950 BETAO (5) = 8.170

SECTION (1)RIGHT VERTICAL DEPENDENT VARIABLE CP

Z/BV	.1580	.3160	.6000	.8400	.9250
X/CV					
.000	.2625	.1337	.1030	.0140	.1033
.050	.4645	.4384	.3656	.5674	.2695
.150	.3392	.3141	.1224	.2377	.1613
.300	.2276	.1690	.1387	.0871	.0003
.520	.0156	-.0842	-.1212	-.1911	-.3501
.685	-.3421	-.5262	-.9333	-.8903	-.9284
.775	-.3464	-.3801	-.7042	-.8756	-.9172
.900		-.2556	-.3057	-.7172	-.8929

ALPHAO(3) = -.300 BETAO (1) = -8.100

SECTION (1)RIGHT VERTICAL DEPENDENT VARIABLE CP

Z/BV	.1580	.3160	.6000	.8400	.9250
X/CV					
.000	.2283	.0896	.0616	.0656	-.0325
.050	-.5924	-.7960	-1.0360	-1.0370	-.7815
.150	-.6811	-.8372	-1.0280	-.9846	-.7868
.300	-.5706	-.7199	-.9670	-.8884	-.7547
.520	-.5592	-.5881	-.9227	-.7335	-.6737
.685	-.5033	-.6393	-.8416	-.6727	-.5516
.775	-.3269	-.6234	-.7430	-.6384	-.4987
.900		-.3989	-.6158	-.5602	-.4577

ARC11-716 IA14 01+712+512\025 RIGHT VERTICAL (RB1R45)

ALPHAO (1) = -.320 BETAO (2) = -4.030

SECTION 1)RIGHT VERTICAL DEPENDENT VARIABLE CP

X/CV \ Z/BV	.1580	.3160	.6000	.8400	.9250
.000	.3275	.2506	.2839	.2910	.2288
.050	-.4381	-.6838	-.8856	-.8960	-.9420
.150	-.2434	-.4517	-.7486	-.8217	-.9159
.300	-.3771	-.4435	-.5412	-.6887	-.7735
.520	-.4532	-.4438	-.4981	-.5965	-.5397
.685	-.4697	-.5728	-1.0050	-.5954	-.4435
.775	-.3173	-.5519	-.5823	-.4519	-.3772
.900		.4012	-.3601	-.4021	-.2979

ALPHAO (3) = -.330 BETAO (3) = .040

SECTION (1)RIGHT VERTICAL DEPENDENT VARIABLE CP

X/CV \ Z/BV	.1580	.3160	.6000	.8400	.9250
.000	.3964	.3228	.4252	.3709	.3955
.050	.0173	-.2117	-.2390	-.1187	-.2355
.150	-.1080	-.1876	-.3773	-.1575	-.1624
.300	-.2513	-.2367	-.1858	-.2140	-.2287
.520	-.2789	-.2938	-.3447	-.3456	-.3820
.685	-.4161	-.6693	-1.0460	-.8204	-.6479
.775	-.3124	-.4384	-.6973	-.5796	-.3526
.900		-.4263	-.4895	-.3897	-.2337

ALPHAO (3) = -.330 BETAO (4) = 4.090

SECTION (1)RIGHT VERTICAL DEPENDENT VARIABLE CP

X/CV \ Z/BV	.1580	.3160	.6000	.8400	.9250
.000	.3367	.2953	.2653	.1747	.2295
.050	.1672	.1227	.0954	.1691	.0334
.150	.0593	.0569	-.1028	.0695	.0158
.300	-.0216	-.0346	-.0227	-.0469	-.1212
.520	-.1426	-.1788	-.2242	-.2783	-.3955
.685	-.4119	-.7450	-.9901	-.9271	-.9617
.775	-.3558	-.4273	-.8989	-.9558	-.7386
.900		-.3146	-.4260	-.5088	-.3925

ORIGINAL PAGE IS OF POOR QUALITY

ARC11-716 TA14 O1+T12+S12N25 RIGHT VERTICAL (RB1R45)

ALPHAO(3) = -.330 BETAO (3) = 8.160

SECTION (1)RIGHT VERTICAL DEPENDENT VARIABLE CP

Z/BV	.1580	.3160	.6000	.8400	.9250
X/CV					
.000	.0215	.1068	.0267	-.0775	.0149
.050	.3997	.3840	.3198	.3194	.2037
.150	.2615	.2706	.0905	.1973	.1246
.300	.1435	.1298	.1059	.0572	-.0358
.520	-.5111	-.1125	-.1499	-.2191	-.3840
.685	-.4020	-.6183	-.9314	-.8757	-.9301
.775	-.3164	.3751	-.5059	-.8822	-.9290
.900		-.2560	-.3305	-.5467	-.6554

ALPHAO(4) = 4.170 BETAO (1) = -8.100

SECTION (1)RIGHT VERTICAL DEPENDENT VARIABLE CP

Z/BV	.1580	.3160	.6000	.8400	.9250
X/CV					
.000	.1642	.0361	-.0307	-.0448	-.1345
.050	-.6405	-.9315	-1.0600	-.9013	-.7209
.150	-.7098	-.8713	-1.0670	-.9882	-.7036
.300	-.4371	-.7158	-1.0000	-.7994	-.6933
.520	.6002	-.5700	-.6397	-.6748	-.6526
.685	-.3777	-.5715	-.7779	-.5949	-.5071
.775	-.2921	.4960	-.6748	-.5610	-.4742
.900		-.3039	-.4539	-.5151	-.4470

ALPHAO(4) = 4.230 BETAO (2) = -4.030

SECTION (1)RIGHT VERTICAL DEPENDENT VARIABLE CP

Z/BV	.1580	.3160	.6000	.8400	.9250
X/CV					
.000	.2963	.1822	.2001	.1957	.1485
.050	-.4561	-.7258	-.8861	-.8778	-.8777
.150	-.2872	-.4706	-.7704	-.8326	-.8454
.300	-.4226	-.4840	-.5053	-.6642	-.7494
.520	-.5075	-.4659	-.4761	-.5165	-.4853
.685	-.3865	-.5150	-.8638	-.4578	-.3563
.775	-.2820	-.4538	-.5316	-.3355	-.2910
.900		-.3541	-.2941	-.2968	-.2538

ARC11-716 IA14 01+T12+S12N25 RIGHT VERTICAL (RB1R45)

ALPHAO(4) = 4.150 BETAO (3) = .010

SECTION (1)RIGHT VERTICAL DEPENDENT VARIABLE CP

X/CV \ Z/BV	.1580	.3160	.6000	.8400	.9250
.000	.3715	.2666	.3085	.2695	.2973
.050	-.0754	-.2974	-.3922	-.1720	-.2847
.150	-.1678	-.2417	-.4520	-.2065	-.2151
.300	-.3040	-.3153	-.2465	-.2488	-.2811
.520	-.3556	-.3563	-.3882	-.3805	-.4132
.685	-.3660	-.5514	-1.0600	-.5024	-.3307
.775	-.2996	-.4363	-.6069	-.3889	-.2428
.900		-.3405	-.4056	-.3450	-.1839

ALPHAO(4) = 4.140 BETAO (4) = 4.110

SECTION (1)RIGHT VERTICAL DEPENDENT VARIABLE CP

X/CV \ Z/BV	.1580	.3160	.6000	.8400	.9250
.000	.2965	.2181	.1765	.0742	.1266
.050	.0841	.0141	.0196	.1379	.0163
.150	-.0424	-.0401	-.1458	.0392	-.0139
.300	-.1273	-.1114	-.0666	-.0717	-.1473
.520	-.2193	-.1953	-.2538	-.2951	-.4067
.685	-.3678	-.6749	-1.0080	-.8946	-.7724
.775	-.3060	-.3793	-.5807	-.8423	-.5446
.900		-.2872	-.3205	-.4028	-.3211

ALPHAO(5) = 8.150 BETAO (1) = -8.090

SECTION (1)RIGHT VERTICAL DEPENDENT VARIABLE CP

X/CV \ Z/BV	.1580	.3160	.6000	.8400	.9250
.000	.1193	-.0162	-.1104	-.1474	-.2320
.050	-.6895	-.8771	-1.0690	-.7905	-.6462
.150	-.3554	-.8884	-1.0780	-.7776	-.6528
.300	-.5363	-.6781	-1.0290	-.7075	-.6162
.520	-.5589	-.4540	-.8999	-.6254	-.5871
.685	-.3264	-.3675	-.6695	-.5752	-.4870
.775	-.2859	-.3336	-.4237	-.5289	-.4562
.900		-.2786	-.1712	-.4825	-.4293

ARC11-716 (A14 01+T12+S12N25 RIGHT VERTICAL (RB1R45)

ALPHAC(5) = 8.150 BETAC (2) = -4.030

SECTION 1)RIGHT VERTICAL DEPENDENT VARIABLE CP

Z/BV	.1580	.3160	.6000	.8400	.9250
X/CV					
.000	.2249	.1244	.1547	.1027	.0228
.050	-.2750	-.7392	-.8952	-.8759	-.8541
.150	-.2440	.4674	-.8270	-.8877	-.7722
.300	-.4331	-.5795	-.5475	-.7787	-.7357
.520	.5206	-.4322	-.4868	-.5134	-.4391
.685	-.3716	-.4219	-.6355	-.2880	-.3528
.775	-.2657	-.3652	-.3623	-.2086	-.2665
.900		-.2953	-.1931	-.1478	-.1811

ALPHAC(5) = 8.140 BETAC (3) = .040

SECTION 1)RIGHT VERTICAL DEPENDENT VARIABLE CP

Z/BV	.1580	.3160	.6000	.8400	.9250
X/CV					
.000	.3017	.2111	.2133	.1892	.2501
.050	-.1223	-.3230	-.4837	-.1941	-.2464
.150	-.2534	-.2897	-.5101	-.1573	-.1648
.300	-.3478	-.3724	-.5115	-.1846	-.2190
.520	-.3470	-.3585	-.7348	-.3658	-.3448
.685	-.3106	-.4254	-.6356	-.5041	-.2846
.775	-.2763	-.3924	-.4422	-.3508	-.1928
.900		-.2909	-.1958	-.2634	-.0941

ALPHAC(5) = 8.140 BETAC (4) = 4.150

SECTION 1)RIGHT VERTICAL DEPENDENT VARIABLE CP

Z/BV	.1580	.3160	.6000	.8400	.9250
X/CV					
.000	.2214	.1557	.1134	-.0187	.0288
.050	-.0890	-.0451	.0041	.1269	.0133
.150	-.1568	-.0700	-.1600	.0297	-.0250
.300	-.2096	-.1247	-.0787	-.0674	-.1337
.520	-.2258	-.2046	-.2558	-.2893	-.3884
.685	-.3588	-.6521	-.9687	-.9426	-.6720
.775	-.2895	-.3449	-.4920	-.5932	-.4833
.900		-.2826	-.2904	-.3265	-.2408

ARC11-718 IA14 OL+T12+S12N25 RIGHT VERTICAL (RB1R45)

ALPHA(5) = 8.120 BETAO (5) = 8.270

SECTION 11RIGHT VERTICAL DEPENDENT VARIABLE CP

Z/BV	.1580	.3160	.6000	.8400	.9250
X/CV					
.000	.0823	-.0166	-.1543	-.3401	-.2223
.050	.1883	.2932	.2165	.2385	.1410
.150	.1212	.1896	.0105	.1212	.0667
.300	.0667	.0655	.0487	.0103	-.0900
.525	-.0711	-.1184	-.1981	-.2641	-.4422
.685	-.3851	-.6746	-.7553	-.8230	-.8976
.775	-.5101	-.3196	-.3514	-.5083	-.6092
.900		-.2740	-.2729	-.4007	-.3314

ARC11-716 IA14 01+T12+S12N25 RIGHT VERTICAL (R81R46) (15 FEB 74)

REFERENCE DATA

SREF = 2.4210 SQ.FT. XMRP = 29.5800 INCHES
LREF = 58.7090 INCHES YMRP = .0000 INCHES
BREF = 58.7090 INCHES ZMRP = .0000 INCHES
SCALE = .0350 SCALE

PARAMETRIC DATA

MACH = .975 ELEVON = .000
RUDDER = .000 SPDBRK = .000

ALPHAO(1) = -7.970 BETAO (1) = -8.030

SECTION 1:RIGHT VERTICAL DEPENDENT VARIABLE CP

Z/BV	.1580	.3160	.6000	.8400	.9250
X/CV					
.000	.5474	.2295	.2567	.3174	.2166
.050	-.4792	-.9417	-.9410	-1.0390	-1.1650
.150	-.5580	-.6580	-.9166	-1.0100	-1.0680
.300	-.7257	-.8110	-.8423	.9442	-.8396
.520	-.4984	-.4842	-.5208	-.7424	-.6415
.645	[illegible]	-.7252	-1.0260	-.6438	-.5805
.775	-.3896	-.6705	-.8935	-.6266	-.5140
.900		-.5116	-.6255	-.6139	-.4768

ALPHAO(2) = 7.960 BETAO (2) = -4.020

SECTION 1:RIGHT VERTICAL DEPENDENT VARIABLE CP

Z/BV	.1580	.3160	.6000	.8400	.9250
X/CV					
.000	.4579	.4415	.4737	.5089	.4455
.050	-.2775	-.5081	-.7034	-.9338	-1.0650
.150	-.0765	-.3402	-.5162	-.6873	-.6475
.300	-.2007	-.2237	-.4039	-.5334	-.4596
.520	-.2657	-.2945	-.3741	-.4706	-.3911
.645	-.4884	-.8676	-.9616	-.8677	-.9385
.775	-.4060	-.5642	-.9306	-.8862	-.9200
.900		-.5116	-.5164	-.6273	-.6297

ALPHAO(1) = -7.890 BETAO (3) = .030

SECTION (1:RIGHT VERTICAL DEPENDENT VARIABLE CP

Z/BV	.1580	.3160	.6000	.8400	.9250
X/CV					
.000	.5365	.5174	.5945	.5679	.5722
.050	.1714	.0032	-.0801	.0494	-.1167
.150	.0632	.0329	-.2197	-.0237	-.0327
.300	-.0227	-.0174	-.0554	-.0841	-.1040
.520	-.1187	-.1882	-.2294	-.2273	-.2714
.645	-.4402	-.8423	-.9574	-.9192	-.9169

ARC11 716 IA14 01+T12+S12:R2 RIGHT VERTICAL (RB1R46)

ORIGINAL PAGE IS OF POOR QUALITY

ALPHAO(1) = -7.890 BETAO (3) = .030

SECTION (1)RIGHT VERTICAL DEPENDENT VARIABLE CP

Z/BV	.1580	.3160	.6000	.8400	.9250
X/CV					
.775	-.3565	-.5186	-.9165	-.9138	-.8973
.900		-.4003	-.5540	-.8059	-.5499

ALPHAO(1) = -7.950 BETAO (4) = 4.100

SECTION (1)RIGHT VERTICAL DEPENDENT VARIABLE CP

Z/BV	.1580	.3160	.6000	.8400	.9250
X/CV					
.000	.4873	.4507	.4494	.3756	.4323
.050	.3660	.3293	.3088	.2977	.2114
.150	.2637	.2408	.0528	.1949	.1368
.300	.1660	.1375	.1097	.0687	-.0015
.520	-.0082	-.0779	-.1135	-.1808	-.2817
.685	-.4382	-.8228	-.9118	-.8727	-.8948
.775	-.3729	-.4950	-.8308	-.8556	-.8847
.900		-.3904	-.7425	-.8524	-.8884

ALPHAO(1) = -7.980 BETAO (5) = 8.190

SECTION (1)RIGHT VERTICAL DEPENDENT VARIABLE CP

Z/BV	.1580	.3160	.6000	.8400	.9250
X/CV					
.000	.5342	.2175	.2168	.1416	.2231
.050	.5555	.5258	.4728	.4424	.3530
.150	.4275	.3919	.2074	.3079	.2375
.300	.3101	.2595	.2132	.1558	.0765
.520	.0841	-.0197	-.0483	-.1274	-.2750
.685	-.4120	-.7459	-.8579	-.8559	-.8785
.775	-.3735	-.4016	-.7591	-.8070	-.8462
.900		-.3495	-.5007	-.7655	-.8407

ARC11-716 TA14 O1+T12+S12N25 RIGHT VERTICAL (RB1R46)

ALPHAO(2) = -3.920 BETAO (1) = -8.060

SECTION (1)RIGHT VERTICAL DEPENDENT VARIABLE CP

Z/BV	.1580	.3160	.6000	.8400	.9250
X/CV					
.000	[illegible]	.1762	.1793	.2082	.1103
.050	[illegible]	-.7119	-.9599	-1.0570	-1.0370
.150	-.5854	-.7462	-.9391	-1.0420	-1.0270
.300	-.2[illegible]	-.6516	-.8734	-.9704	-.8585
.520	[illegible]	-.5157	-.8462	-.7352	-.6902
.685	[illegible]	-.4645	-.9383	-.6438	-.6025
.775	[illegible]	-.5450	-.7795	-.6283	-.5747
.900		.5525	-.6558	-.6208	-.5551

ALPHAO(2) = [illegible] BETAO (2) = -4.010

SECTION (1)RIGHT VERTICAL DEPENDENT VARIABLE CP

Z/BV	[illegible]	.3160	.6000	.8400	.9250
X/CV					
.000	.4269	.3755	.4090	.4174	.3508
.050	-.5365	-.5665	-.7794	-.8774	-.9352
.150	-.1035	-.3517	-.6074	-.7213	-.7922
.300	-.2029	-.3605	-.4436	-.5661	-.5959
.520	.3542	.3407	-.4012	-.4915	-.4213
.685	-.5135	-.7699	-.9527	-.8486	-.9060
.775	-.5627	-.5557	-.8984	-.8664	-.8673
.900		-.5118	-.4868	-.5454	-.5144

ALPHAO(2) = -3.890 BETAO (3) = .020

SECTION (1)RIGHT VERTICAL DEPENDENT VARIABLE CP

Z/BV	.1580	.3160	.6000	.8400	.9250
X/CV					
.000	.4783	.4241	.5120	.4744	.4891
.050	.1102	-.1231	-.1437	-.0336	-.1303
.150	-.0103	-.0807	-.2760	-.0776	-.0938
.300	-.1413	-.0694	-.1054	-.1455	-.1524
.520	-.1551	-.2256	-.2756	-.2746	-.3154
.685	-.4328	-.8336	-.9769	-.9314	-.9373
.775	-.5451	-.5021	-.9367	-.9408	-.9249
.900		-.4103	-.5092	-.5671	-.4343

AFC11-716 TA14 OB+T12+512N25 RIGHT VERTICAL (RB1R46)

ALPHAO (2) = -5.970 BETAO (4) = 4.100

SECTION (1)RIGHT VERTICAL DEPENDENT VARIABLE CP

Z/BV	.1580	.3160	.6000	.8400	.9250
X/CV					
.000	.4284	.3901	.3753	.2898	.3438
.050	.2847	.2418	.1919	.2430	.1585
.150	.1817	.1687	-.0126	.1435	.0871
.300	.0977	.0755	.0552	.0243	-.0483
.520	-.0564	-.1095	-.1490	-.2154	-.3220
.685	-.4343	-.6035	-.9148	-.8722	-.9110
.775	-.3558	-.4751	-.8454	-.8826	-.9155
.900		-.3678	-.6542	-.8660	-.9172

ALPHAO (2) = -3.990 BETAO (5) = 8.160

SECTION (1)RIGHT VERTICAL DEPENDENT VARIABLE CP

Z/BV	.1580	.3160	.6000	.8400	.9250
X/CV					
.000	.3010	.1804	.1496	.0515	.1397
.050	.4890	.4644	.3906	.3877	.2870
.150	.3667	.3395	.1558	.2615	.1888
.300	.2569	.2129	.1667	.1170	.0276
.520	.0514	-.0461	-.0816	-.1549	-.3081
.685	-.4158	-.7372	-.8634	-.8450	-.8826
.775	-.3619	-.4052	-.7680	-.8235	-.8681
.900		-.3322	-.4134	-.7694	-.8372

ALPHAO (3) = -.300 BETAO (1) = -8.100

SECTION (1)RIGHT VERTICAL DEPENDENT VARIABLE CP

Z/BV	.1580	.3160	.6000	.8400	.9250
X/CV					
.000	.2680	.1308	.1082	.1186	.0248
.050	-.5544	-.7299	-.9645	-1.0550	-1.0540
.150	-.6401	-.7714	-.9514	-1.0410	-1.0280
.300	-.5232	-.6589	-.8923	-.9757	-.8822
.520	-.5143	-.5465	-.8569	-.7480	-.7262
.685	-.5856	-.6337	-.8979	.6721	-.6359
.775	-.5927	-.6765	-.7779	-.6755	-.6259
.900		-.4568	-.6482	-.6749	-.6070

ARC11-716 IA14 01+T12+512N25 RIGHT VERTICAL (RB1946)

ALPHA(3) = -.320 BETA(2) = -4.030

SECTION (1)RIGHT VERTICAL DEPENDENT VARIABLE CP

Z/BV	.1580	.3160	.6000	.8400	.9250
X/CV					
.030	.3731	.3015	.3187	.3225	.2583
.050	-.3468	-.6048	-.8560	-.9119	-.9471
.150	-.1868	-.4093	-.6789	-.7650	-.8582
.350	-.3235	-.3727	-.4855	-.6041	-.6735
.520	-.4148	-.4014	-.4529	-.5521	-.4588
.685	.5425	.6242	-.9924	-.8543	-.8667
.775	-.5344	-.4406	-.6184	-.6496	-.6717
.900		-.4931	-.4900	-.4907	-.4115

ALPHA(3) = -.330 BETA(3) = .040

SECTION (1)RIGHT VERTICAL DEPENDENT VARIABLE CP

Z/BV	.1580	.3160	.6000	.8400	.9250
X/CV					
.030	.4454	.3604	.4357	.4030	.4583
.050	.2744	-.1499	-.2435	-.1763	-.1770
.150	-.0545	-.1340	-.3202	-.1139	-.1278
.350	-.1970	-.1471	-.1434	-.1803	-.1909
.520	-.2442	-.2550	-.3116	-.3047	-.3454
.685	-.4235	-.7870	-.9471	-.9343	-.9474
.775	-.5340	-.4810	-.9421	-.9522	-.9457
.900		-.4379	-.4999	-.5459	-.4522

ALPHA(3) = -.330 BETA(4) = 4.040

SECTION (1)RIGHT VERTICAL DEPENDENT VARIABLE CP

Z/BV	.1580	.3160	.6000	.8400	.9250
X/CV					
.030	.3691	.3755	.2998	.2090	.2498
.050	.2080	.1579	.1302	.1848	.0994
.150	.0957	.0884	-.0767	.0889	.0381
.350	.0107	.0062	-.0129	-.0212	-.0914
.520	-.1193	-.1520	-.1947	-.2489	-.3563
.685	-.4415	-.7906	-.9285	-.8840	-.9345
.775	-.3591	-.4523	-.8628	-.9091	-.9465
.900		-.3439	-.5140	-.8874	-.8863

ARC11-718 IA14 C1+T12+S12N25 RIGHT VERTICAL (RB1R46)

ALPHAO (3) = -.330 BETAO (9) = 8.100

SECTION (1)RIGHT VERTICAL DEPENDENT VARIABLE CP

Z/BV	.1580	.3160	.6000	.8400	.9250
X/CV					
.000	.2517	.1405	.0811	-.0386	.0439
.090	.4184	.4026	.3334	.3364	.2350
.150	.3013	.2863	.1037	.2164	.1429
.300	.2014	.1696	.1260	.0775	-.0108
.520	.0172	-.0719	-.1189	-.1968	-.3448
.685	-.4153	-.7148	-.8735	-.8417	-.8921
.775	-.3520	-.4051	-.7719	-.8445	-.8885
.900		-.3106	-.3397	-.7752	-.7796

ALPHAO (4) = 4.100 BETAO (1) = -8.100

SECTION (1)RIGHT VERTICAL DEPENDENT VARIABLE CP

Z/BV	.1580	.3160	.6000	.8400	.9250
X/CV					
.000	.1918	.0797	.0368	.0115	-.0943
.090	-.5958	-.7589	-.9962	-1.0480	-1.0150
.150	-.6808	-.7943	-.9888	-1.0510	-.9720
.300	-.5902	-.6647	-.9316	-1.0050	-.8736
.520	-.5809	-.5815	-.8680	-.7804	-.7131
.685	-.4394	-.6401	-.8430	-.7165	-.6529
.775	-.3298	-.6057	-.7677	-.7139	-.6369
.900		-.3607	-.5904	-.7055	-.6283

ALPHAO (4) = 4.090 BETAO (2) = -4.040

SECTION (1)RIGHT VERTICAL DEPENDENT VARIABLE CP

Z/BV	.1580	.3160	.6000	.8400	.9250
X/CV					
.000	.3278	.2174	.1423	.2070	.1607
.090	-.4162	-.6755	-.8869	-.8928	-.9167
.150	-.2474	-.4299	-.7282	-.7898	-.8637
.300	-.3758	-.4373	-.4927	-.6267	-.6852
.520	-.4180	-.4533	-.4848	-.5344	-.4659
.685	-.4187	-.5330	-.9386	-.7214	-.5749
.775	-.5074	-.5312	-.5658	-.5075	-.4140
.900		-.5400	-.4011	-.4436	-.3350

ARC11-716 IA14 O1+T12+S12N25 RIGHT VERTICAL (RB1R46)

ALPHAO(4) = 4.090 BETAO (3) = .030

SECTION (1)RIGHT VERTICAL DEPENDENT VARIABLE CP

Z/BV	.1580	.3160	.6000	.8400	.9250
X/CV					
.000	.3955	.2784	.3107	.2913	.3192
.050	.0183	-.2699	-.3858	-.1469	-.2251
.150	-.1154	-.2123	-.3944	-.1779	-.1865
.300	-.2790	-.2810	-.2048	-.2209	-.2501
.520	-.3109	-.3160	-.3655	-.3484	-.3920
.685	-.4574	-.6143	-.9961	-.9348	-.9258
.775	-.3143	-.4498	-.7776	-.9065	-.6996
.900		-.4608	-.4972	-.5054	-.4097

ALPHAO(4) = 4.070 BETAO (4) = 4.120

SECTION (1)RIGHT VERTICAL DEPENDENT VARIABLE CP

Z/BV	.1580	.3160	.6000	.8400	.9250
X/CV					
.000	.3259	.2527	.2164	.1139	.1588
.050	.1417	.0636	.0322	.1086	.0273
.150	.0109	.0053	-.1645	.0366	-.0151
.300	-.0794	-.0690	-.0833	-.0587	-.1363
.520	-.1772	-.2050	-.2350	-.2748	-.3899
.685	-.4632	-.9141	-.9192	-.8782	-.9403
.775	-.3655	-.4765	-.8569	-.9112	-.9613
.900		-.3403	-.4092	-.8630	-.6906

ALPHAO(4) = 4.060 BETAO (5) = 8.200

SECTION (1)RIGHT VERTICAL DEPENDENT VARIABLE CP

Z/BV	.1580	.3160	.6000	.8400	.9250
X/CV					
.000	.1692	.0928	.0000	-.1532	-.0639
.050	.3261	.3289	.2738	.2819	.1796
.150	.2082	.2269	.0592	.1709	.0968
.300	.1328	.1164	.0861	.0408	-.0536
.520	-.0215	-.0942	-.1529	-.2122	-.3828
.685	-.4159	-.6882	-.8700	-.8313	-.8989
.775	-.3524	-.3927	-.7000	-.8496	-.8907
.900		-.2986	-.2980	-.5820	-.6547

ARC11-716 TA14 O1+T12+S1^N25 RIGHT VERTICAL (RB1R46)

ALPHAO(5) = 8.040 BETAO (1) = -8.080

SECTION (1)RIGHT VERTICAL DEPENDENT VARIABLE CP

Z/BV	.1580	.3160	.6000	.8400	.9250
X/CV					
.000	.1531	.0115	-.0530	-.0984	-.2023
.050	-.6528	-.8136	-1.0210	-.9425	-.8556
.150	-.3366	-.8196	-1.0170	-.9555	-.8386
.300	-.5138	-.6436	-.9617	-.9206	-.7593
.520	-.6139	-.5014	-.8601	-.7977	-.6573
.685	-.3598	-.4163	-.7383	-.7332	-.6098
.775	-.3114	-.3769	-.6451	-.7466	-.5814
.900		-.3025	-.3775	-.6893	-.5624

ALPHAO(5) = 7.920 BETAO (2) = -4.020

SECTION (1)RIGHT VERTICAL DEPENDENT VARIABLE CP

Z/BV	.1580	.3160	.6000	.8400	.9250
X/CV					
.000	.3400	.1627	.1701	.1220	.0529
.050	-.3064	-.7055	-.8767	-.8928	-.8856
.150	-.2469	-.4449	-.7637	-.8511	-.8911
.300	-.4216	-.4743	-.5070	-.6924	-.7535
.520	-.5197	-.4897	-.5104	-.5355	-.5062
.685	-.4145	-.5142	-.7711	-.5571	-.4262
.775	-.2833	-.4552	-.5175	-.4186	-.3462
.900		-.3302	-.3335	-.3674	-.2982

ALPHAO(5) = 7.910 BETAO (3) = .080

SECTION (1)RIGHT VERTICAL DEPENDENT VARIABLE CP

Z/BV	.1580	.3160	.6000	.8400	.9250
X/CV					
.000	.3650	.2411	.2307	.2026	.2324
.050	-.0665	-.3385	-.4549	-.2032	-.2758
.150	-.1643	-.2663	-.4687	-.2248	-.2377
.300	-.3196	-.3430	-.2641	-.2699	-.3021
.520	-.3735	-.3700	-.4155	-.3809	-.4276
.685	-.4382	-.5320	-1.0010	-.8876	-.7857
.775	-.3131	-.4686	-.5973	-.6073	-.4348
.900		-.4009	-.4136	-.4411	-.2738

ARC11-716 IA14 C1+T12+S12N25 RIGHT VERTICAL (RB1R46)

ALPHAO(5) = 8.040 BETAO (4) = 4.150

SECTION (1)RIGHT VERTICAL DEPENDENT VARIABLE CP

Z/BV	.1580	.3160	.6000	.8400	.9250
X/CV					
.000	.3366	.1911	.1350	-.0036	.0517
.050	.0058	-.0171	.0141	.0900	.0004
.150	-.0891	-.0855	-.1508	.0048	-.0480
.300	-.1976	-.1299	-.0726	-.0920	-.1748
.520	-.2475	-.2009	-.2309	-.3054	-.4291
.685	-.4211	-.6964	-.9359	-.8666	-.9429
.775	-.3344	-.4056	-.7736	-.9416	-.9818
.900		-.3262	-.3748	-.5348	-.4184

ALPHAO(5) = 8.030 BETAO (5) = 8.220

SECTION (1)RIGHT VERTICAL DEPENDENT VARIABLE CP

Z/BV	.1580	.3160	.6000	.8400	.9250
X/CV					
.000	.1239	.0333	-.0929	-.2812	-.1969
.050	.2287	.2789	.2331	.2254	.1344
.150	.1189	.1795	.0215	.1217	.0513
.300	.0723	.0807	.0531	-.0029	-.0932
.520	-.0514	-.1041	-.1880	-.2549	-.4316
.685	-.4134	-.6957	-.8671	-.8474	-.9117
.775	-.3412	-.4012	-.4832	-.8641	-.8771
.900		-.2936	-.3058	-.4385	-.4395

ORIGINAL PAGE IS OF POOR QUALITY

ARC11-716 IA14 01+T12+312N25 RIGHT VERTICAL (RB1R47) (15 FEB 74)

REFERENCE DATA

SREF = 2.4210 SQ.FT. XMRP = 29.5800 INCHES
LREF = 38.7090 INCHES YMRP = .0000 INCHES
BREF = 38.7090 INCHES ZMRP = .0000 INCHES
SCALE = .0500 SCALE

PARAMETRIC DATA

MACH = 1.050 ELEVON = .000
RUDDER = .000 SPDBRK = .000

ALPHAO(1) = -7.960 BETAO (1) = -8.070

SECTION (1)RIGHT VERTICAL DEPENDENT VARIABLE CP

Z/BV	.1580	.3160	.6000	.8400	.9250
X/CV					
.000	.4214	.3057	.3412	.3975	.3126
.050	-.3845	-.5141	-.7936	-.8808	-1.0050
.150	-.4663	-.5573	-.7687	-.8492	-.9126
.300	-.1128	-.5285	-.6973	-.7809	-.7385
.520	-.2895	-.4014	-.6792	-.7207	-.5831
.685	-.5332	-.7362	-.9190	-.6264	-.6934
.775	-.4205	-.5857	-.8280	-.5967	-.5405
.900		-.5390	-.5867	-.5729	-.4880

ALPHAO(1) = -7.960 BETAO (2) = -4.010

SECTION (1)RIGHT VERTICAL DEPENDENT VARIABLE CP

Z/BV	.1580	.3160	.6000	.8400	.9250
X/CV					
.000	.5518	.5038	.5497	.5703	.5163
.050	-.1845	-.4022	-.6446	-.9168	-.9599
.150	.0001	-.2600	-.4386	-.5711	-.7555
.300	-.1044	-.1633	-.3065	-.3358	-.3450
.520	-.1789	-.1986	-.2703	-.3098	-.1962
.685	-.4799	-.8196	-.7617	-.7602	-.7911
.775	-.3868	-.5519	-.7875	-.7631	-.7835
.900		-.4488	-.6253	-.7640	-.7390

ALPHAO(1) = -7.960 BETAO (3) = .030

SECTION (1)RIGHT VERTICAL DEPENDENT VARIABLE CP

Z/BV	.1580	.3160	.6000	.8400	.9250
X/CV					
.000	.6087	.5757	.6832	.6317	.6394
.050	.2583	.0128	-.0511	.0852	-.0563
.150	.1454	.0740	-.1232	.0714	.0628
.300	.0287	.0418	.0473	.0035	-.0033
.520	-.0345	-.0702	-.1337	.1097	-.1503
.685	-.4226	-.7556	-.7823	.7523	-.7521

ARC11-716 IA14 O8+T12+S12N25 RIGHT VERTICAL (RB1R47)

ALPHAO(1) = -7.960 BETAO (3) = .030

SECTION (1)RIGHT VERTICAL DEPENDENT VARIABLE CP

Z/BV	.1580	.3160	.6000	.8400	.9250
X/CV					
.775	-.3510	-.5472	-.7451	-.7403	-.7430
.900		-.4124	-.7129	-.7519	-.7145

ALPHAO(1) = -7.960 BETAO (4) = 4.120

SECTION (1)RIGHT VERTICAL DEPENDENT VARIABLE CP

Z/BV	.1580	.3160	.6000	.8400	.9250
X/CV					
.000	.5537	.5187	.5218	.4585	.5117
.050	.4235	.3789	.3307	.3610	.2864
.150	.3222	.2982	.1183	.2685	.2176
.300	.2271	.2033	.1772	.1559	.0920
.520	.0727	.0143	-.0221	-.0721	-.1580
.645	-.4394	-.7128	-.7512	-.7270	-.7432
.775	-.3691	-.5378	-.6852	-.7054	-.7401
.900		-.3583	-.6145	-.7077	-.7536

ALPHAO(1) = -7.990 BETAO (5) = 8.210

SECTION (1)RIGHT VERTICAL DEPENDENT VARIABLE CP

Z/BV	.1580	.3160	.6000	.8400	.9250
X/CV					
.000	.4126	.3070	.3085	.2369	.3214
.050	.6239	.5937	.5330	.5188	.4354
.150	.4974	.4665	.2946	.3993	.3277
.300	.3855	.3389	.3037	.2573	.1765
.520	.1784	.0881	.0657	-.0054	-.1443
.645	-.4448	-.6264	-.5768	-.7042	-.7212
.775	-.3795	-.4130	-.5984	-.6402	-.6854
.900		-.3270	-.5014	-.6042	-.6734

ARC11-716 TA14 01+T12+S12N25 RIGHT VERTICAL (RB1R47)

ALPHAO(2) = -3.820 BETAO (1) = -8.120

SECTION (1)RIGHT VERTICAL DEPENDENT VARIABLE CP

X/CV \ Z/BV	.1580	.3160	.6000	.8400	.9250
.000	.3891	.2694	.2762	.3058	.2173
.050	-.3865	-.5636	-.7874	-.8773	-.9828
.150	-.4832	-.5943	-.7657	-.8580	-.9273
.300	-.1623	-.5145	-.7077	-.7975	-.7606
.520	-.3417	-.3979	-.6874	-.7200	-.5930
.685	-.5203	-.6950	-.9119	-.6065	-.6095
.775	-.3915	-.5682	-.7455	-.5838	-.5162
.900		-.5369	-.5687	-.5859	-.4694

ALPHAO(2) = -5.830 BETAO (2) = -4.020

SECTION (1)RIGHT VERTICAL DEPENDENT VARIABLE CP

X/CV \ Z/BV	.1580	.3160	.6000	.8400	.9250
.000	.5025	.4432	.4743	.4810	.4523
.050	-.2271	-.4468	-.6677	-.8774	-.9540
.150	-.0362	-.2490	-.4958	-.5584	-.7888
.300	-.1586	-.2182	-.3289	-.3877	-.3020
.520	-.2413	-.2475	-.3032	-.3589	-.2404
.685	-.4615	-.7748	-.7985	-.7201	-.8076
.775	-.3597	-.5198	-.8034	-.7540	-.7964
.900		-.4650	-.4521	-.6044	-.7241

ALPHAO(2) = -3.910 BETAO (3) = .030

SECTION (1)RIGHT VERTICAL DEPENDENT VARIABLE CP

X/CV \ Z/BV	.1580	.3160	.6000	.8400	.9250
.000	.5633	.5022	.5650	.5431	.5617
.050	.2080	-.0579	-.1436	.0623	-.0130
.150	.0926	.0113	-.1648	.0322	.0175
.300	-.0341	-.0400	.0012	-.0323	-.0449
.520	-.1052	-.1112	-.1741	-.1463	-.1859
.685	-.4074	-.7610	-.7949	-.7590	-.7711
.775	-.3287	-.4916	-.7605	-.7559	-.7667
.900		-.3936	-.7147	-.7679	-.7529

ARC11-716 IA14 C1+T12+S12N25 RIGHT VERTICAL (RB1R47)

ALPHAO(2) = -3.910 BETAO (4) = 4.100

SECTION (1)RIGHT VERTICAL DEPENDENT VARIABLE CP

Z/BV	.1580	.3160	.6000	.8400	.9250
X/CV					
.000	[illegible]	.4623	.4519	.3770	.4304
.050	.3504	.2089	.2633	.3039	.2367
.150	.2424	.2268	.0553	.2193	.1733
.300	.1554	[illegible]	.1217	.1161	.0536
.520	.221	-.0215	-.0544	-.0985	-.1910
.685	-.4344	[illegible]	-.7537	-.7223	-.7530
.775	[illegible]	[illegible]	-.6512	-.7173	-.7567
.900		-.3577	-.6096	-.7107	-.7715

ALPHAO(2) = [illegible] BETAO (5) = 8.180

SECTION (1)RIGHT VERTICAL DEPENDENT VARIABLE CP

Z/BV	[illegible]	[illegible]	.6000	.8400	.9250
X/CV					
.000	[illegible]	.2739	.2536	.1616	.2402
.050	[illegible]	.3263	[illegible]	.4658	.3792
.150	[illegible]	[illegible]	[illegible]	.3534	.2825
.300	[illegible]	[illegible]	.2554	.2149	.1340
.520	.1447	[illegible]	[illegible]	-.0369	-.1799
.685	-.4062	-.6438	[illegible]	-.7066	-.7329
.775	[illegible]	[illegible]	-.6121	-.6613	-.7059
.900		-.3342	-.5085	-.6169	-.6956

ALPHAO(3) = .020 BETAO (1) = -8.130

SECTION (1)RIGHT VERTICAL DEPENDENT VARIABLE CP

Z/BV	.1580	.3160	.6000	.8400	.9250
X/CV					
.000	.3526	.2172	.2069	.2182	.1340
.050	-.4300	-.5890	-.8116	-.8908	-.9861
.150	-.3552	-.6314	-.7977	-.8728	-.9354
.300	-.2062	-.5330	-.7416	-.8210	-.7803
.520	-.3978	-.4507	-.7068	-.7178	-.6203
.685	-.5750	-.6319	-.8978	-.6110	-.5729
.775	-.3496	-.5937	-.7128	-.5959	-.5159
.900		-.5104	-.5729	-.6097	-.4824

ORIGINAL PAGE IS OF POOR QUALITY

ARC11-716 IA14 01+T12+S12N25 RIGHT VERTICAL (RB1R47)

ALPHA(3) = .000 BETAO (2) = -4.060

SECTION 1)RIGHT VERTICAL DEPENDENT VARIABLE CP

Z/BV	.1580	.3160	.6000	.8400	.9210
X/CV					
.000	.4489	.3685	.3899	.3888	.3434
.050	-.2703	-.4846	-.7058	-.8732	-.9708
.150	-.1049	-.3228	-.5594	-.5956	-.6247
.300	-.2070	-.2690	-.3750	-.4655	-.3892
.520	-.2987	-.3020	-.3481	-.4171	-.3110
.685	-.4632	-.7201	-.8359	-.7155	-.8059
.775	-.3501	-.4950	-.8149	-.7597	-.8017
.900		-.4624	-.4216	-.5118	-.5135

ALPHA(3) = -.330 BETAO (3) = .040

SECTION (1)RIGHT VERTICAL DEPENDENT VARIABLE CP

Z/BV	.1580	.3160	.6000	.8400	.9250
X/CV					
.000	.5274	.4460	.4803	.4701	.4893
.050	.1733	-.0885	-.2043	.0241	-.0511
.150	.0545	-.0347	-.2260	-.0103	-.0186
.300	-.0924	-.0964	-.0398	-.0622	-.0855
.520	.1516	-.1504	-.2094	-.1780	-.2011
.685	-.4169	-.7678	-.8083	-.7621	-.7857
.775	-.3377	-.4683	-.7762	-.7690	-.7879
.900		-.3813	-.6978	-.7766	-.7831

ALPHA(3) = .060 BETAO (4) = 4.100

SECTION (1)RIGHT VERTICAL DEPENDENT VARIABLE CP

Z/BV	.1580	.3160	.6000	.8400	.9250
X/CV					
.000	.4476	.3955	.3728	.2872	.3399
.050	.2881	.2198	.2010	.2373	.1478
.150	.1699	.1544	-.0032	.1540	.1120
.300	.0809	.0842	.0633	.0561	-.0035
.520	-.0258	-.0641	-.0945	-.1456	-.2336
.685	-.4425	-.7353	-.7766	-.7417	-.7729
.775	-.3460	-.5262	-.7294	-.7537	-.7856
.900		-.3646	-.6569	-.7301	-.7880

ARC11-716 IA14 O1+T12+S12N25 RIGHT VERTICAL (RB1P47)

ALPHAO (3) = .070 BETAO (3) = 8.180

SECTION (1)RIGHT VERTICAL DEPENDENT VARIABLE CP

Z/BV	.1580	.3160	.6000	.8400	.9250
X/CV					
.000	.3269	.2391	.1889	.0869	.1582
.050	.4723	.4474	.4017	.4073	.3187
.150	.3515	.3347	.1763	.2965	.2324
.300	[illegible]	.0299	.1988	.1712	.0894
.520	[illegible]	[illegible]	-.0153	-.0713	-.2210
.685	-.4142	-.6632	-.7045	-.7122	-.7507
.775	-.3561	-.4151	-.6317	-.6909	-.7365
.900		.3325	-.5175	-.6373	-.7207

ALPHAO (4) = 4.100 BETAO (1) = -8.110

SECTION (1)RIGHT VERTICAL DEPENDENT VARIABLE CP

Z/BV	.1580	.3160	.6000	.8400	.9250
X/CV					
.000	.0725	.1604	.1423	.1381	.0496
.050	-.5039	-.6136	-.8252	-.8492	-.9799
.150	-.5126	-.6[illegible]	-.8224	-.7763	-.9078
.300	-.2659	.5543	-.7[illegible]	.8368	-.7846
.520	.4557	-.4[illegible]	[illegible]	-.7188	-.6364
.685	.4470	-.5957	.4471	-.6081	-.5635
.775	.3246	-.5354	.6172	-.6113	-.5342
.900		-.3[illegible]	-.5540	-.6323	-.5228

ALPHAO (4) = 4.100 BETAO (2) = -4.030

SECTION (1)RIGHT VERTICAL DEPENDENT VARIABLE CP

Z/BV	.1580	.3160	.6000	.8400	.9250
X/CV					
.000	.4074	.2982	.3183	.2972	.2577
.050	-.3023	-.5365	-.7402	-.8470	-.9177
.150	-.1370	-.3327	-.5899	-.6443	-.7046
.300	.2474	-.3240	-.3746	-.4834	-.4693
.520	-.3606	-.3550	-.5809	-.4230	-.3650
.685	-.4291	-.5691	-.8676	-.7353	-.7847
.775	-.2091	-.4982	-.6657	-.7770	-.7836
.900		-.4368	-.4476	-.4957	-.4549

ARC11-716 TA14 (M=712+512N25 RIGHT VERTICAL (RB1R47)

ALPHA(4) = 4.100 BETA(3) = .040

SECTION (1)RIGHT VERTICAL DEPENDENT VARIABLE CP

Z/BV	.1580	.3160	.6000	.8400	.9250
X/CV					
.000	.4701	.3679	.3801	.3635	.3929
.050	.1200	-.1795	-.2928	-.0604	-.1197
.150	-.0011	-.1058	-.3092	-.0466	-.0771
.300	-.1567	-.1773	-.1051	-.1128	-.1371
.525	-.2157	-.2085	-.2586	-.2243	-.2666
.685	-.1124	-.7549	-.8193	-.7669	-.9005
.775	.5325	-.4501	-.7945	-.7954	-.8079
.900		-.4051	-.5180	-.7519	.8059

ALPHA(4) = 4.090 BETA(4) = 4.130

SECTION (1)RIGHT VERTICAL DEPENDENT VARIABLE CP

Z/BV	.1580	.3160	.6000	.8400	.9250
X/CV					
.000	.5997	.3283	.2947	.2003	.2558
.050	.2283	.1397	.1334	.1779	.0930
.150	.1060	.0762	-.0674	.0978	.0594
.300	-.0077	.0252	.0123	.0129	-.0495
.520	-.0920	-.1050	-.1336	-.1730	-.2764
.685	-.4581	-.7438	-.7812	-.7358	-.7896
.775	-.3597	-.5239	-.7429	-.7767	-.8115
.900		-.3673	-.6684	-.7511	-.8100

ALPHA(4) = 4.080 BETA(5) = 8.230

SECTION (1)RIGHT VERTICAL DEPENDENT VARIABLE CP

Z/BV	.1580	.3160	.6000	.8400	.9250
X/CV					
.000	.2472	.1817	.1254	.0062	.0742
.050	.3920	.3752	.3327	.3503	.2682
.150	.2695	.2690	.1137	.2546	.1880
.300	.1833	.1625	.1533	.1365	.0500
.520	.0585	-.0227	-.0521	-.0948	-.2570
.685	-.4439	-.6631	-.7009	-.6920	-.7516
.775	-.3533	-.4047	-.6358	-.6936	-.7431
.900		-.3202	-.4549	-.6277	-.7144

ARC11-716 IA14 OI+T12+S12N25 RIGHT VERTICAL (RB1547)

ALPHA(5) = 8.050 BETA(1) = -8.090

SECTION (1)RIGHT VERTICAL DEPENDENT VARIABLE CP

Z/BV	.1580	.3160	.6000	.8400	.9250
X/CV					
.000	.2985	.1164	.0896	.0519	-.0359
.050	-.5316	.5687	-.8395	-.8749	-.9450
.150	-.2514	-.6685	-.8425	-.8880	-.8917
.300	-.3[illegible]	-.5238	-.7779	-.8550	-.8441
.525	[illegible]	[illegible]	.7059	-.7184	-.7513
.685	[illegible]	-.4[illegible]	-.6833	-.6255	-.6312
.775	[illegible]	[illegible]	.6342	-.6456	-.6163
.900		[illegible]	.4727	.6506	-.6136

ALPHA(6) = 6.050 BETA(2) = -4.040

SECTION (1)RIGHT VERTICAL DEPENDENT VARIABLE CP

Z/BV	.1580	.3160	.6000	.8400	.9250
X/CV					
.000	.4119	.2482	.2512	.2130	.1770
[illegible]	[illegible]	-.5[illegible]	[illegible]	[illegible]	-.8346
[illegible]	[illegible]	[illegible]	[illegible]	.6635	-.7627
[illegible]	[illegible]	[illegible]	[illegible]	.6300	-.5268
[illegible]	[illegible]	[illegible]	.5174	-.4525	-.3655
[illegible]	[illegible]	.4[illegible]	[illegible]	-.7531	-.7827
[illegible]	[illegible]	-.5[illegible]	.5342	-.5[illegible]	-.5523
[illegible]		[illegible]	-.4[illegible]	-.4287	-.3756

ALPHA(5) = 8.050 BETA(3) = .020

SECTION (1)RIGHT VERTICAL DEPENDENT VARIABLE CP

Z/BV	.1580	.3160	.6000	.8400	.9250
X/CV					
.000	.4315	.3099	.2978	.2632	.2946
.050	.0643	-.2210	-.3581	-.1534	-.2009
.150	-.0477	-.1641	-.3674	-.1365	-.1566
.300	-.2188	-.2412	-.1870	-.1670	-.1922
.525	-.2900	-.2619	-.3112	-.2671	-.3050
.685	-.4595	-.7238	-.8379	-.7786	-.8253
.775	-.5466	-.4602	-.8201	-.8155	-.8414
.900		-.4635	-.4523	-.7152	-.6011

AF(11)-716 IA14 CH+T12+S12N25 RIGHT VERTICAL (RB1R47)

ALPHA(5) = 8.020 BETA(4) = 4.170

SECTION RIGHT VERTICAL DEPENDENT VARIABLE CP

Z/H	.1580	.3161	.6000	.8400	.9250
Y/C					
.000	.4115	.2708	.2175	.1213	.1735
.050	.1635	.0766	.062[illegible]	.1134	.0463
.150	.0561	.0026	.1267	.0560	.0106
.350	-.0786	-.0532	-.0425	-.0330	-.0068
.475	-.1467	-.1477	-.1817	-.2[illegible]3	-.1165
.625	-.4962	-.7602	-.8019	-.7[illegible]2	-.6[illegible]75
.775	-.4[illegible]11	-.5114	-.7658	-.7737	-.5161
.900		-.5659	-.6254	-.7[illegible]	-.8083

ALPHA(5) = 8.020 BETA(5) = 8.260

SECTION RIGHT VERTICAL DEPENDENT VARIABLE CP

Z/H	.1580	.3161	.6000	.8400	.9250
Y/C					
.000	.2766	.1395	.0653	-.1015	-.0348
.050	.5121	.2989	.2794	.3118	.2284
.150	.1802	.1955	.0911	.2163	.1560
.300	.0842	.1052	.1248	.1061	.0205
.520	-.0245	-.0167	-.0709	-.1213	-.2880
.625	-.5407	-.6526	-.6945	-.6873	-.7545
.775	-.3498	-.4520	-.6084	-.6976	-.7409
.900		-.3337	-.4402	-.6229	-.7108

ARC11-716 TA14 C1+T12+S12N25 RIGHT VERTICAL (RB1R48) (15 FEB 74

REFERENCE DATA

SREF = 2.4210 SQ.FT. XMRP = 29.5900 INCHES
LREF = 34.8000 INCHES YMRP = .0000 INCHES
BREF = 5.7500 INCHES ZMRP = .0000 INCHES
SCALE = 1.0000 SCALE

PARAMETRIC DATA

MACH = 1.190 ELEVON = .000
RUDDER = .000 SPOILER = .000

ALPHAC(1) = 1.930 BETA(1) = -.000 DEG

SECTION = 1:RIGHT VERTICAL A DEPENDENT VARIABLE CP

Z/BX	.1580	.3160	.6000	.8400	.9250
X/C					
.000	[illegible]	[illegible]	[illegible]	.4306	.3492
.005	[illegible]	[illegible]	[illegible]	-.8072	[illegible]
.010	[illegible]	[illegible]	[illegible]	.642	-.8239
.050	[illegible]	[illegible]	[illegible]	-.6419	-.6598
.100	[illegible]	[illegible]	[illegible]	.0404	-.5993
.200	[illegible]	[illegible]	[illegible]	-.671	-.7989
[illegible]	[illegible]	[illegible]	[illegible]	[illegible]	-.0735
.800	[illegible]	.445	[illegible]	.5710	-.4447

ALPHAC(2) = [illegible] BETA(2) = -4.000

SECTION = [illegible] DEPENDENT VARIABLE CP

Z/BX	[illegible]	[illegible]	[illegible]	.8400	[illegible]
X/C					
.000	[illegible]	.5467	.5822	.6063	.5561
.005	[illegible]	[illegible]	.5467	[illegible]	.0545
.010	.4470	.1916	-.3431	.6640	[illegible]
.050	.0512	-.1102	-.2468	.2591	-.4688
.100	[illegible]	-.1485	-.2146	.2225	-.1377
.200	[illegible]	.7593	-.6814	-.6411	-.6831
.800	.4915	-.5841	[illegible]	.6884	-.6748
.900		.4558	-.6650	-.6413	-.6458

ALPHAC(3) = 7.920 BETA(3) = .040

SECTION = 1:RIGHT VERTICAL DEPENDENT VARIABLE CP

Z/BX	.1580	.3160	.6000	.8400	.9250
X/C					
.000	.6597	.6140	.6751	.6607	.6699
.050	.5093	.0265	-.0556	.1211	.0337
.150	.1975	.1197	.0047	.1239	.1121
.300	.0478	.0745	.0969	.0592	.0435
.520	.0056	-.0149	-.0791	-.0516	-.0727
.645	-.4410	-.6669	-.6904	-.6640	-.6618

ARC11-716 IA14 OH+T1c+S12N25 RIGHT VERTICAL (RB1R4B)

ALPHA(1) = -7.920 BETA(3) = .040

SECTION (1)RIGHT VERTICAL DEPENDENT VARIABLE CP

Z/BV	.1580	.3160	.6000	.8400	.9250
X/CV					
.775	-.3461	.5704	-.6543	-.6539	-.6173
.900		.4003	-.6270	-.6672	-.6341

ALPHA(1) = -7.950 BETA(4) = 4.090

SECTION (1)RIGHT VERTICAL DEPENDENT VARIABLE CP

Z/BV	.1580	.3160	.6000	.8400	.9250
X/CV					
.000	.5980	.5584	.5812	.4959	.5486
.050	.4659	.4144	.3929	.4038	.3274
.150	.3602	.3373	.2469	.3144	.2645
.300	.2662	.2540	.2271	.2049	.1449
.520	.1271	.0778	.0369	-.0110	-.0914
.685	-.5023	-.6291	-.6449	-.5471	-.6482
.775	-.3866	-.5911	-.5932	-.6203	-.6507
.900		-.3785	-.5447	-.6243	-.6717

ALPHA(1) = -7.990 BETA(5) = 8.230

SECTION (1)RIGHT VERTICAL DEPENDENT VARIABLE CP

Z/BV	.1580	.3160	.6000	.8400	.9250
X/CV					
.000	.4520	.3538	.3485	.2729	.3515
.050	.6584	.6247	.5733	.5553	.4748
.150	.5316	.4994	.5946	.4586	.3724
.300	.4210	.3808	.3389	.3056	.2255
.520	.2250	.1391	.1185	.0527	-.0819
.685	-.4461	-.5462	-.5935	-.6290	-.6333
.775	-.3766	-.4444	-.5254	-.5604	-.6042
.900		-.2924	-.4362	-.5285	-.5887

ARC11-716 IA14 O14 .+S12N25 RIGHT VERTICAL (RB1R48)

ALPHAO(2) = -3.940 BETAO (1) = -8.110

SECTION (1)RIGHT VERTICAL DEPENDENT VARIABLE CP

Z/BV	.1580	.3160	.6000	.8400	.9250
X/CV					
.000	.4239	.3053	.3185	.3450	.2673
.050	-.3500	-.5000	-.7209	-.8180	-.9251
.150	-.4594	-.5384	-.7061	-.7666	-.8555
.300	-.1123	-.4673	-.6456	-.6980	-.6898
.520	-.3002	-.3756	-.6280	-.6743	-.5513
.685	-.5109	-.6984	-.8494	-.6332	-.7204
.775	-.3872	-.5607	-.7797	-.5972	-.5638
.900		-.5265	-.5636	-.5664	-.4521

ALPHAO(2) = -3.960 BETAO (2) = -4.020

SECTION (1)RIGHT VERTICAL DEPENDENT VARIABLE CP

Z/BV	.1580	.3160	.6000	.8400	.9250
X/CV					
.000	.5525	.4798	.5150	.5173	.4747
.050	-.1651	-.3750	-.6372	-.8228	-.8648
.150	.0050	-.2043	-.4286	-.6908	-.6973
.300	-.1941	-.1697	-.2730	-.2553	-.4036
.520	-.1947	-.2059	-.2566	-.2624	-.1710
.685	-.4836	-.7500	-.7191	-.7033	-.6944
.775	-.3780	-.5347	-.7187	-.7064	-.6931
.900		-.4461	-.6848	-.7016	-.6759

ALPHAO(2) = -3.890 BETAO (3) = .050

SECTION (1)RIGHT VERTICAL DEPENDENT VARIABLE CP

Z/BV	.1580	.3160	.6000	.8400	.9250
X/CV					
.000	.6152	.5463	.5856	.5686	.5881
.050	.2452	-.0361	-.1438	.0498	.0144
.150	.1497	.0639	-.0709	.0705	.0559
.300	.0056	-.0082	.0459	.0152	.0004
.520	-.0598	-.0720	-.1217	-.0964	-.1263
.685	-.4207	-.6836	-.7026	-.6759	-.6811
.775	-.3299	-.5150	-.6735	-.6726	-.6829
.900		-.3839	-.6370	-.6869	-.6726

APC11-716 IA14 O1+T12+S12N25 RIGHT VERTICAL (RB1R48)

ALPHAO(2) = -3.890 BETAO (4) = 4.130

SECTION (1)RIGHT VERTICAL DEPENDENT VARIABLE CP

X/CV \ Z/BV	.1580	.3160	.6000	.8400	.9250
.000	.5449	.4952	.4887	.4134	.4646
.050	.3854	.3164	.2994	.3322	.2602
.150	.2678	.2468	.1664	.2507	.2050
.300	.1755	.1805	.1619	.1509	.0915
.520	.0640	.0299	-.0079	-.0498	-.1338
.685	-.4850	-.6415	-.6606	-.6520	-.6734
.775	-.3659	-.5847	-.6167	-.6411	-.6828
.900		-.3749	-.5573	-.6428	-.7024

ALPHAO(2) = -3.890 BETAO (5) = 8.190

SECTION (1)RIGHT VERTICAL DEPENDENT VARIABLE CP

X/CV \ Z/BV	.1580	.3160	.6000	.8400	.9250
.000	.4099	.3156	.2931	.2085	.2796
.050	.5703	.5375	.4846	.4861	.4048
.150	.4446	.4195	.3174	.3769	.3135
.300	.3407	.3120	.2754	.2512	.1724
.520	.1707	.0954	.0685	.0170	-.1249
.685	-.4818	-.5784	-.6102	-.6323	-.6571
.775	-.3774	-.4791	-.5467	-.5806	-.6351
.900		-.3040	-.4449	-.5404	-.6255

ALPHAO(3) = -.310 BETAO (1) = -8.140

SECTION (1)RIGHT VERTICAL DEPENDENT VARIABLE CP

X/CV \ Z/BV	.1580	.3160	.6000	.8400	.9250
.000	.3815	.2660	.2512	.2616	.1873
.050	-.3792	-.5160	-.7423	-.8176	-.9042
.150	-.5068	-.5598	-.7346	-.7906	-.8482
.300	-.1457	-.4826	-.6760	-.7258	-.7094
.520	-.3377	-.4142	-.6464	-.6922	-.5826
.685	-.5154	-.6666	-.8543	-.6147	-.6233
.775	-.3644	-.5761	-.7542	-.5885	-.5309
.900		-.5347	-.5573	-.5870	-.4858

ARC11-716 1A14 O1+T12+S12N25 RIGHT VERTICAL (RB1R48)

ALPHAO(3) = -.330 BETAO (2) = -4.040

SECTION (1)RIGHT VERTICAL DEPENDENT VARIABLE CP

X/CV \ Z/BV	.1580	.3160	.6000	.8400	.9250
.000	.5037	.4167	.4509	.4384	.3996
.050	-.1955	-.4184	-.6723	-.8349	-.8744
.150	-.0406	-.2238	-.4572	-.6775	-.7291
.300	-.1405	-.2102	-.2756	-.2784	-.2925
.520	-.2401	-.2497	-.2911	-.3090	-.2137
.685	-.4632	-.7379	-.7556	-.7100	-.7128
.775	-.3619	-.5159	-.7423	-.7204	-.7203
.900		-.4652	-.5826	.7198	-.7233

ALPHAO(3) = -.340 BETAO (3) = .030

SECTION (1)RIGHT VERTICAL DEPENDENT VARIABLE CP

X/CV \ Z/BV	.1580	.3160	.6000	.8400	.9250
.000	.5736	.4852	.5087	.4929	.5243
.050	.2101	-.0852	-.1918	.0031	-.0204
.150	.1075	.0054	-.1425	.0334	.0260
.300	-.0402	-.0601	-.0150	-.0143	-.0339
.520	-.1103	-.1184	-.1567	-.1250	-.1560
.685	-.4238	-.7070	-.7168	-.6618	-.6958
.775	-.3347	-.4900	-.6908	-.6903	-.7018
.900		-.3807	-.6410	-.6980	-.6988

ALPHAO(3) = -.340 BETAO (4) = 4.110

SECTION (1)RIGHT VERTICAL DEPENDENT VARIABLE CP

X/CV \ Z/BV	.1580	.3160	.6000	.8400	.9250
.000	.4926	.4354	.4213	.3372	.3887
.050	.3437	.2542	.2457	.2814	.2077
.150	.2173	.1869	.0962	.2056	.1628
.300	.1105	.1322	.1202	.1141	.0536
.520	.0287	-.0033	-.0364	-.0811	-.1661
.685	-.4762	-.6482	-.6689	-.6517	-.6865
.775	-.3594	-.5831	-.6335	-.6578	-.7014
.900		-.3744	-.5674	-.6500	-.7066

APC11-716 IA14 O1+T12+S12N25 RIGHT VERTICAL (RB1R48)

ALPHAO(3) = -.340 BETAO (5) = 8.180

SECTION (1)RIGHT VERTICAL DEPENDENT VARIABLE CP

Z/BV	.1580	.3160	.6000	.8400	.9250
X/CV					
.000	.3621	.2711	.2271	.1274	.2065
.050	.3208	.4881	.4264	.4318	.3548
.150	.3916	.3722	.2424	.3297	.2652
.300	.2963	.2679	.2145	.2132	.1305
.520	.1341	.0621	.0296	-.0076	-.1557
.685	-.4986	-.6001	-.6159	-.6285	-.6682
.775	-.3820	-.5205	-.5597	-.5951	-.6511
.900		-.3010	-.4649	-.5495	-.6382

ALPHAO(4) = 4.170 BETAO (1) = -8.250

SECTION (1)RIGHT VERTICAL DEPENDENT VARIABLE CP

Z/BV	.1580	.3160	.6000	.8400	.9250
X/CV					
.000	.3173	.1991	.1793	.1606	.0875
.050	-.4537	-.5490	-.7410	-.8130	-.8869
.150	-.5507	-.5772	-.7446	-.8039	-.8333
.300	-.2067	-.5117	-.6979	-.7671	-.7406
.520	-.3743	-.4559	-.6672	-.7290	-.6185
.685	-.4621	-.6062	-.8323	-.6169	-.5822
.775	-.3398	-.6111	-.7102	-.6080	-.5536
.900		-.4568	-.5626	-.5236	-.5329

ALPHAO(4) = 4.160 BETAO (2) = -4.050

SECTION (1)RIGHT VERTICAL DEPENDENT VARIABLE CP

Z/BV	.1580	.3160	.6000	.8400	.9250
X/CV					
.000	.4635	.3477	.3653	.3405	.3065
.050	-.2274	-.4553	-.6919	-.8239	-.8789
.150	-.0783	-.2661	-.4898	-.5725	-.7738
.300	-.1754	-.2623	-.2907	-.3247	-.2975
.520	-.2995	-.3046	-.3296	-.3299	-.2638
.685	-.4247	-.6124	-.7737	-.6702	-.7265
.775	-.3079	-.4701	-.7567	-.7086	-.7416
.900		-.4603	-.4287	-.6520	-.7485

ARC11-716 TA14 (X1+T12+S12N25 RIGHT VERTICAL (RB1R48)

ALPHAO(4) = 4.170 BETAO (3) = .030

SECTION (1)RIGHT VERTICAL DEPENDENT VARIABLE CP

Z/BV	.1580	.3160	.6000	.8400	.9250
X/CV					
.000	.5259	.4222	.4225	.3887	.4182
.050	.1452	-.1488	-.2636	-.1373	-.1454
.150	.0567	-.0500	-.2126	-.0448	-.0431
.300	-.0899	-.1180	-.0863	-.0775	-.0970
.520	-.1611	-.1701	-.2207	-.1832	-.2029
.685	-.4430	-.7229	-.7339	-.6840	-.7155
.775	-.3391	-.4785	-.7146	-.7074	-.7268
.900		-.3950	-.6446	-.7103	-.7278

ALPHAO(4) = 4.170 BETAO (4) = 4.130

SECTION (1)RIGHT VERTICAL DEPENDENT VARIABLE CP

Z/BV	.1580	.3160	.6000	.8400	.9250
X/CV					
.000	.4507	.3710	.3358	.2544	.3102
.050	.2697	.1679	.1633	.2037	.1376
.150	.1496	.0894	.0878	.1296	.0987
.300	.0311	.0359	.0590	.0575	-.0035
.520	-.0511	-.0572	-.0954	-.1234	-.2104
.685	-.4761	-.6604	-.6897	-.6612	-.7083
.775	-.3462	-.5495	-.6627	-.6845	-.7283
.900		-.3597	-.5907	-.6669	-.7257

ALPHAO(4) = 4.160 BETAO (3) = 8.240

SECTION (1)RIGHT VERTICAL DEPENDENT VARIABLE CP

Z/BV	.1580	.3160	.6000	.8400	.9250
X/CV					
.000	.2912	.2186	.1639	.0519	.1149
.050	.4394	.4218	.3565	.3520	.2773
.150	.3077	.3139	.1648	.2555	.2012
.300	.2217	.2120	.1579	.1525	.0722
.520	.0863	.0276	-.0280	-.0554	-.2012
.685	-.5330	-.6051	-.6364	-.6285	-.6779
.775	-.3772	-.5545	-.5969	-.6063	-.6663
.900		-.3449	-.5004	.5541	-.6524

ARC11-716 IA14 O1+T12+S12N25 RIGHT VERTICAL (RB1R48)

ALPHAO(5) = 8.130 BETAO (1) = -4.040

SECTION 1)RIGHT VERTICAL DEPENDENT VARIABLE CP

X/CV \ Z/BV	.1580	.3160	.6000	.8400	.9250
.000	.4638	.3045	.2960	.2423	.2148
.050	-.1938	-.4681	-.6840	-.7982	-.8805
.150	-.0693	-.2489	-.5194	-.5804	-.6992
.300	-.2203	-.3036	-.3238	-.4165	-.3615
.520	-.3453	-.3427	-.3660	-.3657	-.3195
.685	-.4393	-.5399	-.7940	-.6920	-.7155
.775	-.3108	-.4832	-.6746	-.7429	-.7420
.900		-.4522	-.4369	-.5505	-.6499

ALPHAO(5) = 8.130 BETAO (2) = .040

SECTION (1)RIGHT VERTICAL DEPENDENT VARIABLE CP

X/CV \ Z/BV	.1580	.3160	.6000	.8400	.9250
.000	.4913	.3619	.3374	.2[illegible]	.3220
.050	.0954	-.1817	-.3060	-.16[illegible]	-.2122
.150	.0204	-.0991	-.2755	-.1008	-.0946
.300	-.1441	-.1785	-.1335	-.1241	-.1424
.520	-.2148	-.2100	-.2591	-.2226	-.2479
.685	-.4466	-.7219	-.7488	-.6957	-.7373
.775	-.3491	-.4872	-.7384	-.7328	-.7560
.900		-.4340	-.6387	-.7289	-.7556

ALPHAO(5) = 8.120 BETAO (3) = 4.160

SECTION (1)RIGHT VERTICAL DEPENDENT VARIABLE CP

X/CV \ Z/BV	.1580	.3160	.6000	.8400	.9250
.000	.4510	.3216	.2609	.1644	.2172
.050	.2116	.1112	.1006	.1403	.0829
.150	.0833	.0326	-.0561	.0683	.0414
.300	-.0363	-.0163	-.0037	.0036	-.0575
.520	-.0965	-.1004	-.1505	-.1605	-.2503
.685	-.5372	-.6948	-.7105	-.6635	-.7237
.775	-.3838	-.5938	-.6865	-.7095	-.7489
.900		-.3733	-.6116	-.6752	-.7467

ARC11-718 IA14 01+T12+S12N25 RIGHT VERTICAL (RB1R48)

ALPHAO(5) = 8.110 BETAO (4) = 8.270

SECTION (1)RIGHT VERTICAL DEPENDENT VARIABLE CP

Z/BV	.1580	.3160	.6000	.8400	.9250
X/CV					
.000	.3744	.2063	.1231	-.0187	.0318
.050	.3150	.3279	.2851	.2846	.2207
.150	.1748	.2147	.0984	.1981	.1459
.300	.0709	.1208	.1105	.1013	.0243
.525	-.0384	-.0151	-.0633	-.0903	-.2368
.685	-.6671	-.6194	-.6524	-.6279	-.6826
.775	-.5832	-.6196	-.6181	-.6341	-.6717
.900		-.5712	-.5265	-.5699	-.6492

ARC11-716 IA14 OA+T12+S12N25 RIGHT VERTICAL (RB1R49) (15 FEB 74)

REFERENCE DATA

SREF = 2.4210 SQ.FT. XMRP = 29.5800 INCHES
LREF = 38.7090 INCHES YMRP = .0000 INCHES
BREF = 38.7090 INCHES ZMRP = .0000 INCHES
SCALE = .0300 SCALE

PARAMETRIC DATA

MACH = 1.150 ELEVON = .000
RUDDER = .000 SPOBRK = .000

ALPHAO(1) = -7.860 BETAO (1) = -8.060

SECTION (1)RIGHT VERTICAL DEPENDENT VARIABLE CP

X/CV \ Z/BV	.1580	.3160	.6000	.8400	.9250
.000	.5075	.3981	.4283	.4758	.3969
.050	-.2659	-.3947	-.6383	-.7462	-.8839
.150	-.3813	-.4330	-.6158	-.6778	-.7745
.300	-.0100	-.4011	-.5581	-.5960	-.5859
.520	-.1885	-.2998	-.5428	-.5787	-.4624
.685	-.5287	-.6625	-.7660	-.7198	-.7918
.775	-.4102	-.5609	-.7341	-.6168	-.7447
.900		-.4974	-.5917	-.5220	-.5403

ALPHAO(1) = -7.860 BETAO (2) = -4.000

SECTION (1)RIGHT VERTICAL DEPENDENT VARIABLE CP

X/CV \ Z/BV	.1580	.3160	.6000	.8400	.9250
.000	.6590	.5945	.6313	.6447	.5961
.050	-.0494	-.2632	-.5123	-.7155	-.7640
.150	.1076	-.1127	-.3115	-.5950	-.5952
.300	.0162	-.0401	-.1807	-.1810	-.4088
.520	-.0643	-.0841	-.1535	-.1669	-.0796
.685	-.4825	-.6508	-.5999	-.6120	-.6038
.775	-.3589	-.5698	-.6137	-.6132	-.5957
.900		-.4166	-.590	16	-.5686

ALPHAO(1) = -7.860 BETAO ([illegible] .040

SECTION (1)RIGHT VERTICAL DEPENDENT VARIABLE CP

X/CV \ Z/BV	.1580	.3160	.6000	.8400	.9250
.000	.7162	.6624	.7239	.7073	.7160
.050	.3526	.0581	-.0163	.1161	.0643
.150	.2603	.1816	.0865	.1807	.1686
.300	.1514	.1408	.1563	.1250	.1107
.520	.0651	.0386	-.0107	.0135	-.0177
.685	-.4278	-.5660	-.6033	-.5736	-.5718

ARC11-716 IA14 O1+T12+S12N25 RIGHT VERTICAL (RB1R49)

ALPHAO(1) = -7.880 BETAO (3) = .040

SECTION (1)RIGHT VERTICAL DEPENDENT VARIABLE CP

Z/BV	.1580	.3160	.6000	.8400	.9250
X/CV					
.775	-.3171	-.5390	-.5686	-.5658	-.5690
.900		-.3615	-.5429	-.5787	-.5472

ALPHAO(1) = -7.870 BETAO (4) = 4.100

SECTION (1)RIGHT VERTICAL DEPENDENT VARIABLE CP

Z/BV	.1580	.3160	.6000	.8400	.9250
X/CV					
.000	.6654	.6105	.6092	.5423	.5908
.050	.5083	.4548	.4442	.4458	.4098
.150	.4042	.3801	.3208	.3641	.3135
.300	.2156	.3145	.2763	.2573	.1974
.520	.1812	.1349	.0865	.0502	-.0298
.685	-.4440	-.5485	-.5712	-.5635	-.5697
.775	-.3525	-.5240	-.5138	-.5334	-.5740
.900		-.3323	-.4645	-.5377	-.5934

ALPHAO(1) = -7.890 BETAO (5) = 8.200

SECTION (1)RIGHT VERTICAL DEPENDENT VARIABLE CP

Z/BV	.1580	.3160	.6000	.8400	.9250
X/CV					
.000	.5020	.4022	.3990	.3255	.4048
.050	.6792	.6482	.6062	.5886	.5402
.150	.5587	.5255	.4481	.4770	.4109
.300	.4480	.4147	.3747	.3477	.2706
.520	.2669	.1880	.1687	.1077	-.0237
.685	-.3948	-.4786	-.5153	-.5493	-.5553
.775	-.3524	-.4155	-.4526	-.4851	-.5324
.900		-.2603	-.3689	-.4592	-.5191

AR011-016 IA14 01+T12+S12*25 RIGHT VERTICAL (RB1R49)

ALPHA(2) = -3.930 BETA(1) = -8.100

SECTION (1)RIGHT VERTICAL DEPENDENT VARIABLE CP

Z/B=	.1580	.3160	.6000	.8400	.9250
X/CV					
.000	.4773	.3628	.3696	.3980	.3257
.050	-.2832	-.4171	-.6434	-.7473	-.8593
.150	.3872	-.4591	-.6251	-.6721	-.7706
.300	-.0483	-.3879	-.5677	-.5985	-.5973
.520	-.2357	-.3130	-.5465	-.5866	-.4610
.685	-.4851	-.6596	-.7614	-.6637	-.7466
.775	-.3744	-.5255	-.7315	-.6024	-.6440
.900		-.4910	-.5343	-.5257	-.4562

ALPHA(2) = -3.880 BETA(2) = -4.120

SECTION (1)RIGHT VERTICAL DEPENDENT VARIABLE CP

Z/B=	.1580	.3160	.6000	.8400	.9250
X/CV					
.000	.6016	.5274	.5582	.5589	.5107
.050	-.1074	-.3128	-.5498	-.7329	-.7801
.150	.0571	-.1444	-.3568	-.6191	-.6321
.300	-.0360	-.0942	.2166	-.2130	-.4064
.520	-.1263	-.1566	-.1954	-.2132	-.1254
.685	-.4493	-.6715	-.6385	-.6263	-.6231
.775	-.3510	-.5129	-.6353	-.6332	-.6194
.900		-.4034	-.6114	-.6255	-.6035

ALPHA(2) = -3.890 BETA(3) = .030

SECTION (1)RIGHT VERTICAL DEPENDENT VARIABLE CP

Z/B=	.1580	.3160	.6000	.8400	.9250
X/CV					
.000	.6654	.5937	.6304	.6205	.6369
.050	.2951	-.0052	-.0886	.0519	.0615
.150	.2040	.1173	.0121	.1285	.1171
.300	.0651	.0551	.0892	.0756	.0593
.520	-.0126	-.0198	-.0588	-.0362	-.0630
.685	-.3940	-.6061	-.6193	-.5941	-.6010
.775	-.2909	-.4969	-.5943	-.5931	-.6036
.900		-.3457	-.5594	-.6078	-.5961

ARC11-716 IA14 OL+T12+S12N25 RIGHT VERTICAL (RB1R49)

ALPHAO(2) = -3.890 BETAO (4) = 4.080

SECTION (1)RIGHT VERTICAL DEPENDENT VARIABLE CP

Z/BV	.1580	.3160	.6000	.8400	.9250
X/CV					
.000	.6071	.5459	.5337	.4585	.5075
.050	.4453	.3770	.3818	.3870	.3539
.150	.3364	.3088	.2637	.3101	.2610
.300	.2486	.2454	.2234	.2108	.1480
.520	.1279	.0958	.0569	.0120	-.0709
.685	-.4479	-.5649	-.5725	-.5736	-.5914
.775	-.3357	-.5429	-.5340	-.5589	-.6007
.900		-.3357	-.4750	-.5585	-.5993

ALPHAO(2) = 3.890 BETAO (5) = 8.180

SECTION (1)RIGHT VERTICAL DEPENDENT VARIABLE CP

Z/BV	.1580	.3160	.6000	.8400	.9250
X/CV					
.000	.4619	.3686	.3421	.2528	.3349
.050	.5048	.5720	.5350	.5223	.4778
.150	.4805	.4549	.3803	.4198	.3565
.300	.3795	.3539	.3114	.2971	.2216
.520	.2151	.1445	.1191	.0714	-.0573
.685	-.4533	-.5058	-.5308	-.5648	-.5763
.775	-.3537	-.4531	-.4764	-.5124	-.5563
.900		-.2953	-.3978	-.4799	-.5500

ALPHAO(3) = -.310 BETAO (1) = -8.100

SECTION (1)RIGHT VERTICAL DEPENDENT VARIABLE CP

Z/BV	.1580	.3160	.6000	.8400	.9250
X/CV					
.000	.4200	.3012	.3046	.3176	.2430
.050	-.3425	-.4476	-.8780	-.7570	-.8372
.150	-.4567	-.4905	-.6669	-.7121	-.7996
.300	-.0916	-.4239	-.6024	-.6406	-.6366
.520	-.2896	-.3668	-.5635	-.6238	-.5133
.685	-.4729	-.6225	-.7685	-.6288	-.7000
.775	-.5260	-.5251	-.7421	-.5853	-.5709
.900		-.4957	-.5282	-.5462	-.4495

AF011-716 TA14 O1+T12+S12N25 RIGHT VERTICAL (RB1R49)

ALPHA(3) = -.330 BETA(2) = -4.030

SECTION 1)RIGHT VERTICAL DEPENDENT VARIABLE CP

Z/BV	.1580	.3160	.6000	.8400	.9250
X/CV					
.000	.5467	.4497	.4862	.4736	.4258
.050	-.1592	-.3606	-.6037	-.7520	-.7478
.150	-.0954	-.2059	-.4190	-.6513	-.6339
.300	-.1454	-.1521	-.2593	-.2643	-.4372
.520	-.1570	-.1955	-.2372	-.2457	-.1656
.685	-.4610	-.6806	-.6750	-.6357	-.6372
.775	-.3537	-.4856	-.6577	-.6492	-.6358
.900		-.4188	-.6163	.6421	.6437

ALPHA(3) = -.340 BETA(3) = .050

SECTION 1)RIGHT VERTICAL DEPENDENT VARIABLE CP

Z/BV	.1580	.3160	.6000	.8400	.9250
X/CV					
.000	.6144	.5232	.5557	.5350	.5587
.050	.2224	-.0748	-.1536	-.0497	-.0616
.150	.1476	.0413	-.0859	.0686	.0746
.300	.0135	-.0158	.0254	.0390	.0223
.520	-.0682	-.0780	-.1044	-.0731	-.0935
.685	-.5934	-.6297	-.6241	-.5900	-.6098
.775	-.2956	-.4443	-.6072	-.6015	-.6192
.900		-.3558	-.5552	-.6599	-.6180

ALPHA(3) = -.340 BETA(4) = 4.100

SECTION (1)RIGHT VERTICAL DEPENDENT VARIABLE CP

Z/BV	.1580	.3160	.6000	.8400	.9250
X/CV					
.000	.5490	.4783	.4693	.3784	.4307
.050	.3714	.2971	.3140	.3225	.2776
.150	.2532	.2365	.1858	.2514	.2054
.300	.1543	.1460	.1712	.1626	.1029
.520	.0820	.0528	.0158	-.0233	-.1116
.685	-.4545	-.5784	-.5898	-.5795	-.6120
.775	-.3298	-.5501	-.5602	-.5806	-.6269
.900		-.5451	-.4998	-.5736	-.6319

ARC11-716 IA14 OL+T12+S12N25 RIGHT VERTICAL (RB1R49)

ALPHAO(3) = -.340 BETAO (3) = 8.170

SECTION (1)RIGHT VERTICAL DEPENDENT VARIABLE CP

Z/BV	.1580	.3160	.6000	.8400	.9250
X/CV					
.000	.4074	.3272	.2956	.1956	.2639
.050	.5298	.4998	.4705	.4803	.4082
.150	.4014	.3928	.3045	.3627	.3031
.300	.3104	.2981	.2584	.2514	.1726
.520	.1730	.1099	.0766	.0424	-.0984
.685	-.4544	-.5247	-.5458	-.5653	-.5926
.775	-.5516	-.4882	-.5019	-.5328	-.5812
.900		-.3096	-.4231	-.4944	-.5717

ALPHAO(4) = 4.150 BETAO (1) = -8.080

SECTION (1)RIGHT VERTICAL DEPENDENT VARIABLE CP

Z/BV	.1580	.3160	.6000	.8400	.9250
X/CV					
.000	.3468	.2214	.2091	.2207	.1460
.050	-.4181	-.4973	-.6834	-.7598	-.8118
.150	.5157	-.5254	-.6877	-.7298	-.7827
.300	-.1642	-.4830	-.6287	-.6766	-.6675
.520	-.3441	-.4334	-.5934	-.6464	-.5492
.685	-.4628	-.5500	-.7641	-.5681	-.5695
.775	-.5058	-.5646	-.6481	-.5490	-.5024
.900		-.4487	-.5011	-.5560	-.4820

ALPHAO(4) = 4.010 BETAO (2) = -4.010

SECTION (1)RIGHT VERTICAL DEPENDENT VARIABLE CP

Z/BV	.1580	.3160	.6000	.8400	.9250
X/CV					
.000	.4941	.3788	.3869	.3686	.3260
.050	-.2000	-.4072	-.6363	-.7660	-.8032
.150	-.0584	-.2535	-.4530	-.6731	-.7156
.300	-.1288	-.2113	-.2641	-.2759	-.3201
.520	-.2486	-.2566	-.2818	-.2850	-.1956
.685	-.4265	-.6286	-.6984	-.6358	-.6413
.775	-.2092	-.4522	-.6761	-.6563	-.6538
.900		-.4377	-.4226	-.6489	-.6839

AR011-710 IA14 DI+T12+S12N25 RIGHT VERTICAL (PB1R49)

ALPHA(4) = 4.000 BETA(3) = .040

SECTION 1)RIGHT VERTICAL DEPENDENT VARIABLE CP

Z/BV	.1580	.3160	.6000	.8400	.9250
X/CV					
.000	.5554	.4382	.4546	.4436	.4606
.050	.1814	-.1080	-.1901	-.0407	-.0435
.150	.0901	-.0202	-.1249	.0286	.0189
.500	-.0526	-.0821	-.0283	-.0105	-.0320
.520	-.1271	-.1287	-.1496	.1017	-.1442
.645	-.4151	-.6557	-.6499	-.5929	-.6358
.775	-.3152	.4449	-.6333	-.6214	-.6495
.900		-.2502	-.5631	-.6231	-.6553

ALPHA(4) = 4.030 BETA(4) = 4.110

SECTION 1)RIGHT VERTICAL DEPENDENT VARIABLE CP

Z/BV	.1580	.3160	.6000	.8400	.9250
X/CV					
.000	.4908	.4040	.3649	.2825	.3342
.050	.3161	.2235	.2277	.2633	.2199
.150	.2017	.1495	.1191	.1928	.1592
.500	.0950	.1061	.1224	.1194	.0576
.520	.0118	.0000	-.0509	-.0607	-.1505
.645	.721	-.5815	-.6016	-.5824	-.6248
.775	-.3199	-.5589	-.5758	-.6038	-.6470
.900		-.3294	-.5091	-.5608	-.6439

ALPHA(4) = 4.030 BETA(5) = 8.210

SECTION (1)RIGHT VERTICAL DEPENDENT VARIABLE CP

Z/BV	.1580	.3160	.6000	.8400	.9250
X/CV					
.000	.3222	.2477	.2019	.1002	.1651
.050	.4439	.4196	.3967	.4003	.3429
.150	.3097	.3168	.2333	.3103	.2536
.500	.2260	.2314	.2008	.2063	.1271
.520	.1140	.0709	.0313	.0035	-.1353
.645	-.5004	-.5359	-.5547	-.5671	-.6078
.775	-.3406	-.5139	-.5247	-.5502	-.5983
.900		-.3058	-.4383	-.5046	-.5490

ARC11-716 IA14 O1+T12+S12N25 RIGHT VERTICAL (RB1R49)

ALPHAO(5) = 8.040 BETAO (1) = -8.090

SECTION (1)RIGHT VERTICAL DEPENDENT VARIABLE CP

Z/BV	.1580	.3160	.6000	.8400	.9250
X/CV					
.000	.3741	.1717	.1514	.1173	.0530
.050	-.4938	-.5537	-.6927	-.7333	-.8138
.150	-.1452	-.5679	-.6974	-.7486	-.7745
.300	-.3061	-.4788	-.6442	-.7058	-.6867
.520	-.4485	-.3829	-.5976	-.6357	-.5728
.685	-.3799	-.4117	-.6049	-.5334	-.5217
.775	-.3134	-.3970	-.5865	-.5410	-.4997
.900		-.2628	-.4767	-.5478	-.4905

ALPHAO(5) = 7.970 BETAO (2) = -4.030

SECTION (1)RIGHT VERTICAL DEPENDENT VARIABLE CP

Z/BV	.1580	.3160	.6000	.8400	.9250
X/CV					
.000	.4870	.3300	.3112	.2625	.2347
.050	-.1650	-.4206	.6257	-.7141	-.7995
.150	-.0410	-.2338	-.4755	-.5322	-.6678
.300	-.1729	-.2495	-.2971	-.3683	-.3304
.520	-.2962	-.2929	-.3177	-.3195	-.2698
.685	-.4123	-.5376	-.7139	-.5984	-.6476
.775	-.2987	-.4454	-.6804	-.6393	-.6664
.900		-.4337	-.3916	-.5282	-.6472

ALPHAO(5) = 8.060 BETAO (3) = .040

SECTION (1)RIGHT VERTICAL DEPENDENT VARIABLE CP

Z/BV	.1580	.3160	.6000	.8400	.9250
X/CV					
.000	.5170	.3839	.3637	.3282	.3548
.050	.1108	-.1411	-.2442	-.1062	-.1676
.150	.0474	-.0637	-.1950	-.0479	-.0478
300	-.1136	-.1317	-.0774	-.0727	-.0940
.520	-.1832	-.1617	-.1964	-.1738	-.1996
.685	-.4333	-.6621	-.6675	-.6215	-.6647
.775	-.3357	-.4678	-.6575	-.5572	-.6844
.900		-.3866	-.5945	-.6519	-.6852

ARC11-716 IA14 O1+T12+S12N25 RIGHT VERTICAL (RB1R49)

ALPHAO(5) = 8.080 BETAO (4) = 4.140

SECTION (1)RIGHT VERTICAL DEPENDENT VARIABLE CP

Z/BV	.1580	.3160	.6000	.8400	.9250
X/CV					
.000	.4794	.3553	.2865	.1805	.2397
.050	.2448	.1634	.1708	.1863	.1633
.150	.1214	.0952	.0479	.1142	.1032
.300	.0197	.0495	.0511	.0520	.0103
.520	-.0391	-.0463	-.0910	-.1050	-.1856
.685	-.5319	-.6064	-.6203	-.5836	-.6352
.775	-.3330	-.5869	-.6037	-.6280	-.6593
.900		-.3423	-.5448	-.5912	-.6591

ALPHAO(5) = 8.050 BETAO (5) = 8.270

SECTION (1)RIGHT VERTICAL DEPENDENT VARIABLE CP

Z/BV	.1580	.3160	.6000	.8400	.9250
X/CV					
.000	.3940	.2609	.1348	-.0053	.0650
.050	.3702	.3385	.3141	.3116	.2680
.150	.2300	.2281	.1564	.2272	.1956
.300	.1121	.1425	.1421	.1435	.0794
.520	.0048	.0146	0228	-.0433	-.1769
.685	-.6357	-.5599	-.5785	-.5722	-.6162
.775	-.3582	-.5603	-.5499	-.5796	-.6103
.900		-.3471	-.4832	-.5253	-.6005

ARC11-716 IA14 O1+T12+S12N25 RIGHT VERTICAL (RB1R5C) (15 FEB 74)

REFERENCE DATA

SREF = 2.4210 SQ.FT. XMRP = 29.5800 INCHES
LREF = 38.7090 INCHES YMRP = .0000 INCHES
BREF = 38.7090 INCHES ZMRP = .0000 INCHES
SCALE = .0300 SCALE

PARAMETRIC DATA

MACH = 1.250 ELEVON = .000
RUDDER = .000 SPOBRK = .000

ALPHAO(1) = -8.010 BETAO (1) = -8.020

SECTION (1)RIGHT VERTICAL DEPENDENT VARIABLE CP

Z/BV	.1580	.3160	.6000	.8400	.9250
X/CV					
.000	.5595	.4522	.4868	.5284	.4558
.050	-.2039	-.3196	-.5068	-.6381	-.7248
.150	-.3271	-.5433	-.4925	-.5934	-.6753
.300	.0468	-.3050	-.4457	-.4738	-.5384
.520	-.1171	-.2523	-.4441	-.4459	-.3844
.685	-.5242	-.5507	-.6524	-.6344	-.6402
.775	-.3559	-.5509	-.6191	-.6357	-.6597
.900		-.4429	-.5174	-.4675	-.6115

ALPHAO(1) = -8.010 BETAO (2) = -4.000

SECTION (1)RIGHT VERTICAL DEPENDENT VARIABLE CP

Z/BV	.1580	.3160	.6000	.8400	.9250
X/CV					
.000	.6911	.5999	.6525	.6757	.6328
.050	-.0513	-.2246	-.4995	-.5653	-.6061
.150	.0797	-.1356	-.2388	-.4736	-.4741
.300	.0522	-.0267	-.1173	-.3344	-.3330
.520	-.0593	-.0725	-.1347	-.1062	-.0665
.685	-.4844	-.5297	-.5027	-.4804	-.4916
.775	-.3396	-.5305	-.5144	-.4894	-.4916
.900		-.3958	-.4602	-.4954	-.4609

ALPHAO(1) = -8.000 BETAO (3) = .030

SECTION (1)RIGHT VERTICAL DEPENDENT VARIABLE CP

Z/BV	.1580	.3160	.6000	.8400	.9250
X/CV					
.000	.7465	.6771	.7023	.6973	.7213
.050	.2610	.0645	-.0288	-.0294	-.0364
.150	.2905	.1792	.1539	.1963	.1959
.300	.1510	.1317	.1412	.1585	.1470
.520	.0556	.0455	.0157	.0255	.0199
.685	-.4149	-.4929	-.4825	-.4491	-.4543

ARC11-716 IA14 O1+T12+S12N25 RIGHT VERTICAL (R81R50)

ALPHAO(1) = -8.000 BETAO (3) = .030

SECTION (1)RIGHT VERTICAL DEPENDENT VARIABLE CP

Z/BV	.1580	.3160	.6000	.8400	.9250
X/CV					
.775	-.3212	-.5038	-.4686	-.4554	-.4607
.900		-.3801	-.4288	-.4736	-.4522

ALPHAO(1) = -8.010 BETAO (4) = 4.100

SECTION (1)RIGHT VERTICAL DEPENDENT VARIABLE CP

Z/BV	.1580	.3160	.6000	.8400	.9250
X/CV					
.000	.6867	.6171	.6335	.5766	.6240
.050	.5315	.4444	.4470	.4582	.4438
.150	.4105	.3636	.3732	.3931	.3544
.300	.2857	.2920	.3026	.3056	.2485
.520	.1934	.1544	.1491	.1176	.0454
.685	-.3861	-.4407	-.4576	-.4381	-.4521
.775	-.3256	-.4405	-.4099	-.4233	-.4641
.900		-.3390	-.3621	-.4294	-.4705

ALPHAO(1) = -8.030 BETAO (5) = 8.160

SECTION (1)RIGHT VERTICAL DEPENDENT VARIABLE CP

Z/BV	.1580	.3160	.6000	.8400	.9250
X/CV					
.000	.5593	.4672	.4756	.4035	.4671
.050	.7030	.6576	.6357	.6162	.5876
.150	.5678	.5465	.5194	.5196	.4624
.300	.4630	.4475	.4116	.4028	.3714
.520	.3144	.2544	.2410	.1688	.0648
.685	-.3064	-.3813	-.3994	-.4286	-.4360
.775	-.3159	-.3600	-.3527	-.3788	-.4235
.900		-.2654	-.2840	-.3617	-.4189

ARC11-716 IA14 O1+T12+S12N25 RIGHT VERTICAL (RB1R50)

ALPHAO(2) = -3.930 BETAO (1) = -8.050

SECTION (1)RIGHT VERTICAL DEPENDENT VARIABLE CP

Z/BV	.1580	.3160	.6000	.8400	.9250
X/CV					
.000	.5217	.4023	.4207	.4449	.3716
.050	-.2484	-.3469	-.5371	-.6531	-.7395
.150	-.3569	-.5641	-.5224	-.6362	-.6923
.300	.0228	-.3223	-.4633	-.4974	-.5559
.520	-.1685	-.2754	-.4518	-.4702	-.4016
.685	-.5046	-.5747	-.6612	-.6372	-.6589
.775	-.3766	-.5223	-.6330	-.6264	-.6664
.900		-.4574	-.5188	-.4776	-.6066

ALPHAO(2) = -3.930 BETAO (2) = -4.020

SECTION (1)RIGHT VERTICAL DEPENDENT VARIABLE CP

Z/BV	.1580	.3160	.6000	.8400	.9250
X/CV					
.000	.6438	.5380	.5749	.5886	.5596
.050	-.0895	-.2615	-.5009	-.5783	-.6162
.150	.0593	-.1381	-.2585	-.4860	-.4884
.300	.0166	-.0627	-.1411	-.2485	-.3338
.520	-.1049	-.1154	-.1580	-.1010	-.0387
.685	-.4437	-.5604	-.5213	-.4847	-.4878
.775	-.5224	-.4929	-.5301	-.5345	-.4865
.900		-.3793	-.4702	-.5087	-.4796

ALPHAO(2) = -3.930 BETAO (3) = .050

SECTION (1)RIGHT VERTICAL DEPENDENT VARIABLE CP

Z/BV	.1580	.3160	.6000	.8400	.9250
X/CV					
.000	.7011	.6136	.6230	.6087	.6344
.050	.2158	.0261	-.0579	-.0722	-.0504
.130	.2428	.1353	.1137	.1401	.1490
.300	.1046	.0786	.0917	.1057	.1006
.520	.0064	.0050	-.0276	-.0233	-.0207
.685	-.3958	-.5094	-.5007	-.4764	-.4797
.775	-.2832	-.5067	-.4895	-.4903	-.4904
.900		-.3419	-.4509	-.5042	-.4909

AFC11-716 IA14 01+T12+S12N25 RIGHT VERTICAL (RB1R50)

ALPHAO(2) = -3.940 BETAO (4) = 4.090

SECTION 1)RIGHT VERTICAL DEPENDENT VARIABLE CP

X/CV \ Z/BV	.1580	.3160	.6000	.8400	.9250
.000	.6437	.5643	.5627	.4981	.5506
.050	.4729	.3801	.3787	.3925	.3934
.150	.3571	.2941	.3083	.3305	.3032
.300	.2337	.2375	.2448	.2522	[illegible]
.520	.1370	.1112	.0984	.0817	.0179
.685	-.4225	-.4497	-.4729	-.4442	-.4640
.775	-.3086	-.4636	-.4507	-.4332	-.4811
.900		-.3381	-.3663	-.4419	-.4900

ALPHAO(2) = -3.950 BETAO (5) = 8.110

SECTION (1)RIGHT VERTICAL DEPENDENT VARIABLE CP

X/CV \ Z/BV	.1580	.3160	.6000	.8400	.9250
.000	.5294	.4314	.4183	.3356	.3918
.050	.6285	.5766	.5619	.5456	.5221
.150	.4927	.4721	.4525	.4583	.4060
.300	.3877	.3808	.3537	.3495	.2797
.520	.2590	.2132	.1901	.1306	.0293
.685	-.3474	-.3962	-.4064	-.4354	-.4521
.775	-.3209	-.3917	-.3757	-.4035	-.4465
.900		-.2979	-.3062	-.3408	-.4452

ALPHAO(3) = -.340 BETAO (1) = -8.060

SECTION (1)RIGHT VERTICAL DEPENDENT VARIABLE CP

X/CV \ Z/BV	.1580	.3160	.6000	.8400	.9250
.000	.4908	.3544	.3606	.1671	.2995
.050	-.2920	-.3596	-.5423	-.6446	-.7296
.150	-.4008	-.3788	-.5417	-.6197	-.6996
.300	.0047	-.3579	-.4765	-.5122	-.5366
.520	-.2030	-.3201	-.4605	-.4895	-.3937
.685	-.4856	-.5800	-.6645	-.6329	-.6641
.775	-.3758	-.5119	-.6399	-.5959	-.6615
.900		-.4682	-.4963	-.4868	-.5062

ARC11-718 IA14 OI+T12+S12N25 RIGHT VERTICAL (RB1R50)

ALPHAO(3) = -.350 BETAO (2) = -4.020

SECTION (1)RIGHT VERTICAL DEPENDENT VARIABLE CP

X/CV \ Z/BV	.1580	.3160	.6000	.8400	.9250
.000	.5886	.4813	.5071	.5134	.4890
.050	-.1306	-.2947	-.5126	-.5822	-.6170
.150	.0053	-.1643	-.3001	-.4923	-.5067
.300	-.0207	-.1011	-.1587	-.1595	-.3347
.520	-.1341	-.1520	-.1571	-.1324	-.0700
.685	-.4370	-.5745	-.5496	-.4970	-.5017
.775	-.3223	-.4678	-.5450	-.5152	-.4966
.900		-.3703	-.4809	-.5253	-.5019

ALPHAO(3) = -.360 BETAO (3) = .040

SECTION (1)RIGHT VERTICAL DEPENDENT VARIABLE CP

X/CV \ Z/BV	.1580	.3160	.6000	.8400	.9250
.000	.6431	.5562	.5552	.5241	.5540
.050	.1658	-.0036	-.0888	-.0947	-.0839
.150	.1968	.0918	.0301	.0983	.1003
.300	.0635	.0282	.0458	.0727	.0570
.520	-.0278	-.0342	-.0653	-.0462	-.0553
.685	-.4229	-.5258	-.5154	-.4714	-.4939
.775	-.2772	-.4948	-.5076	-.4912	-.5038
.900		-.3385	-.4496	-.5004	-.4985

ALPHAO(3) = -.360 BETAO (4) = 4.080

SECTION (1)RIGHT VERTICAL DEPENDENT VARIABLE CP

X/CV \ Z/BV	.1580	.3160	.6000	.8400	.9250
.000	.5867	.4989	.4866	.4364	.4781
.050	.4255	.3242	.3224	.3399	.3383
.150	.3036	.2398	.2463	.2788	.2517
.300	.1725	.1812	.2002	.2071	.1587
.520	.0952	.0760	.0523	.0456	-.0224
.685	-.4488	-.4622	-.4690	-.4576	-.4112
.775	-.3027	-.4828	-.4558	-.4632	-.4967
.900		-.3409	-.3949	-.4576	-.5013

ARC11-716 IA14 01+712+512N25 RIGHT VERTICAL (RB1R50)

ALPHA(3) = -.360 BETA(3) = 8.120

SECTION (1)RIGHT VERTICAL DEPENDENT VARIABLE CP

Z/BV	.1580	.3160	.6000	.8400	.9250
X/CV					
.000	.4762	.3751	.3482	.2557	.3134
.050	.5711	.5204	.5034	.4907	.4691
.150	.4275	.4156	.3855	.4075	.3575
.300	.3[illegible]	.3320	.3053	.3113	.2364
.520	.2215	.1744	.1424	.1066	-.0124
.685	-.3926	.4257	-.4310	-.4256	-.4682
.775	-.3258	-.4177	-.4035	-.4066	-.4676
.900		-.3283	-.3049	-.3718	-.4607

ALPHA(4) = 4.010 BETA(1) = -9.080

SECTION (1)RIGHT VERTICAL DEPENDENT VARIABLE CP

Z/BV	.1580	.3160	.6000	.8400	.9250
X/CV					
.000	.4326	.2800	.2871	.2628	.1914
.050	-.3781	-.4351	-.5533	-.6337	-.7035
.150	-.4505	-.4442	-.5611	-.6213	-.7126
.300	-.1215	-.4204	-.5020	-.5533	-.5376
.520	.2730	-.3410	-.4964	-.5309	-.4309
.685	-.3441	-.3141	-.6687	-.5673	-.6108
.775	-.2977	-.4750	-.6251	-.5244	-.5042
.900		-.4303	-.4535	-.4699	-.4146

ALPHA(4) = 4.010 BETA(2) = -4.030

SECTION (1)RIGHT VERTICAL DEPENDENT VARIABLE CP

Z/BV	.1580	.3160	.6000	.8400	.9250
X/CV					
.000	.5363	.4046	.4308	.4195	.4140
.050	-.1836	-.5272	-.5010	-.5698	-.6283
.150	-.0636	-.1899	-.3051	-.5012	-.5302
.300	-.0537	-.1314	-.1747	-.1378	-.2355
.520	-.1663	-.1704	-.2052	-.1445	-.1045
.685	-.3516	-.5475	-.5710	-.4869	-.5125
.775	-.2677	-.4091	-.5632	-.5081	-.5283
.900		-.5781	-.4729	-.5133	-.5537

ARC11-718 1A14 O1+T12+S12N25 RIGHT VERTICAL (RB1R50)

ALPHAO(4) = 4.050 BETAO (3) = .040

SECTION (1)RIGHT VERTICAL DEPENDENT VARIABLE CP

Z/BV	.1580	.3160	.6000	.8400	.9250
X/CV					
.000	.5814	.4679	.4554	.4170	.4877
.050	.1472	-.0574	-.1393	-.1414	-.0996
.150	.1341	.0315	-.0297	.0360	.0689
.300	.0046	-.0272	-.0118	.0236	.0301
.520	-.0805	-.0825	-.1110	-.0711	-.0828
.685	-.4022	-.5429	-.5342	-.4823	-.5117
.775	-.2884	-.4438	-.5307	-.5045	-.5312
.900		-.3332	-.4530	-.5110	-.5358

ALPHAO(4) = 4.050 BETAO (4) = 4.090

SECTION (1)RIGHT VERTICAL DEPENDENT VARIABLE CP

Z/BV	.1580	.3160	.6000	.8400	.9250
X/CV					
.000	.5404	.4394	.4173	.3517	.4050
.050	.3641	.2571	.2518	.2725	.2841
.150	.2381	.1649	.1828	.2183	.2150
.300	.1066	.1182	.1451	.1586	.1355
.520	.0433	.0325	.0078	.0269	-.0418
.685	-.4758	-.4772	-.4879	-.4583	-.4928
.775	-.2999	-.4946	-.4745	-.4680	-.5177
.900		-.3324	-.4047	-.4580	-.5228

ALPHAO(4) = 4.080 BETAO (5) = 8.170

SECTION (1)RIGHT VERTICAL DEPENDENT VARIABLE CP

Z/BV	.1580	.3160	.6000	.8400	.9250
X/CV					
.000	.4254	.3036	.2708	.1562	.2254
.050	.4868	.4298	.4380	.4172	.4259
.150	.3345	.3351	.3293	.3422	.3041
.300	.2409	.2676	.2534	.2619	.2006
.520	.1845	.1382	.0970	.0678	-.0356
.685	-.4404	-.4338	-.4412	-.4378	-.4768
.775	-.3405	-.4351	-.4255	-.4299	-.4765
.900		-.3651	-.3442	-.3954	-.4722

ARC11-716 IA14 OH+T12+S12N25 RIGHT VERTICAL (RB1R50)

ALPHA(5) = 8.050 BETA(1) = 8.050

SECTION (1)RIGHT VERTICAL DEPENDENT VARIABLE CP

Z/BV	.1580	.3160	.6000	.8400	.9250
X/CV					
.000	.4596	.2582	.2186	.2077	.1406
.050	-.3211	-.4527	.5842	-.6304	-.6995
.150	-.0745	-.4612	-.5877	-.6393	-.6972
.300	-.2711	-.3574	-.5238	-.5737	-.5804
.520	-.3145	-.3077	-.5021	-.5474	-.4772
.685	-.4155	-.4242	-.6263	-.5263	-.5571
.775	.3206	-.3976	-.5380	-.4997	-.4807
.900		-.2925	-.4127	-.4883	-.4512

ALPHA(5) = 8.000 BETA(2) = -3.980

SECTION (1)RIGHT VERTICAL DEPENDENT VARIABLE CP

Z/BV	.1580	.3160	.6000	.8400	.9250
X/CV					
.000	.3527	.3716	.3551	.3589	.3237
.050	.1340	-.3302	-.4971	-.5872	-.6204
.150	.0753	-.1640	-.3213	-.5014	-.5811
.300	-.0960	-.1675	-.1956	-.1743	-.1758
.520	-.2088	-.2115	-.2397	-.2066	-.1519
.685	-.3487	-.5438	-.5898	-.5127	-.5392
.775	-.2864	-.3066	-.5737	-.5455	-.5553
.900		-.4160	-.4487	-.5484	-.5746

ALPHA(5) = 7.910 BETA(3) = .040

SECTION (1)RIGHT VERTICAL DEPENDENT VARIABLE CP

Z/BV	.1580	.3160	.6000	.8400	.9250
X/CV					
.000	.5674	.4251	.3680	.3662	.3853
.050	.1030	-.0849	-.1726	-.1522	-.1322
.150	.1048	-.0122	-.0755	.0164	.0135
.300	-.0468	-.0825	-.0610	-.0092	-.0244
.520	-.1293	-.1251	-.1439	-.1105	-.1279
.685	-.3955	-.5583	-.5425	-.4988	-.5307
.775	-.2929	-.4185	-.5382	-.5299	-.5561
.900		-.3449	-.4598	-.5507	-.5588

ARC11-716 IA14 OI+T12+.12N25 RIGHT VERTICAL (RB1R50)

ALPHAO(5) = 6.000 BETAO (4) = 4.130

SECTION (1)RIGHT VERTICAL DEPENDENT VARIABLE CP

Z/BV	.1580	.3180	.6000	.8400	.9250
X/CV					
.000	.5903	.4005	.3510	.2978	.3323
.050	.2817	.1967	.1852	.2417	.2422
.150	.1616	.1101	.1273	.1930	.1625
.300	.0344	.0629	.0986	.1298	.0734
.520	-.0008	-.0009	-.0294	-.0147	-.0977
.685	-.4985	-.4931	-.4902	-.4699	-.5159
.775	-.5170	-.5177	-.4787	-.4935	-.5437
.900		-.3627	-.4053	-.4751	-.5451

ALPHAO(5) = 7.940 BETAO (5) = 8.220

SECTION (1)RIGHT VERTICAL DEPENDENT VARIABLE CP

Z/BV	.1580	.3160	.6000	.8400	.9250
X/CV					
.000	.4400	.2746	.2055	.1117	.1551
.050	.3263	.3664	.3625	.3773	.3734
.150	.2009	.2592	.2564	.3072	.2677
.300	.1[illegible]	.1888	.1961	.2281	.1540
.520	.0322	.0819	.0674	.0425	-.0753
.685	-.5457	-.4499	-.4545	-.4470	-.4960
.775	-.4020	-.4697	-.4358	-.4538	-.4965
.900		-.4464	-.4471	-.4162	-.4925

ARC11-716 IA14 OI+T12+S12N25 RIGHT VERTICAL (RB1R51) (15 FEB 74)

REFERENCE DATA

SREF = 2.4210 SQ.FT. XMRP = 29.5800 INCHES
LREF = 38.7090 INCHES YMRP = .0000 INCHES
BREF = 38.7090 INCHES ZMRP = .0000 INCHES
SCALE = .0500 SCALE

PARAMETRIC DATA

MACH = 1.400 ELEVON = .000
RUDDER = .000 SPDBRK = .000

ALPHAO (1) = -7.990 BETAO (1) = -8.050

SECTION (1)RIGHT VERTICAL DEPENDENT VARIABLE CP

X/CV \ Z/BV	.1580	.3160	.6000	.8400	.9250
.000	.5497	.4763	.5298	.5618	.5030
.050	-.1904	-.2486	-.3819	-.4979	-.5657
.150	-.3124	-.2702	-.3754	-.4657	-.5277
.300	.0651	-.2650	.3426	-.3610	-.4198
.500	-.0627	-.2348	-.3493	-.3590	-.2992
.685	-.4592	-.4307	-.5317	-.4896	-.5028
.775	-.3544	-.4626	-.5072	-.5333	-.5188
.900		-.4332	-.4167	-.4090	-.5167

ALPHAO (1) = -7.880 BETAO (2) = -4.010

SECTION (1)RIGHT VERTICAL DEPENDENT VARIABLE CP

X/CV \ Z/BV	.1580	.3160	.6000	.8400	.9250
.000	.7255	.6403	.6940	.7082	.6885
.050	-.0047	-.1488	-.3886	-.4094	-.4471
.150	.1139	-.0756	-.2311	-.3208	-.3274
.300	.1091	.0205	-.0261	-.2178	-.2079
.520	.0324	-.0185	-.0662	-.0458	-.0638
.685	-.4282	-.3993	-.4159	-.3529	-.3744
.775	-.3478	-.4188	-.4118	-.3668	-.3703
.900		-.4072	-.3493	-.3799	-.3568

ALPHAO (1) = -7.870 BETAO (3) = .020

SECTION (1)RIGHT VERTICAL DEPENDENT VARIABLE CP

X/CV \ Z/BV	.1580	.3160	.6000	.8400	.9250
.000	.7801	.7250	.7390	.7250	.7501
.050	.2971	.1240	.0153	.0055	.0114
.150	.3458	.2426	.1334	.2359	.2433
.300	.2076	.1458	.1803	.2043	.2029
.520	.1073	.1079	.0908	.1023	.1058
.685	-.3495	-.3580	-.3404	-.3053	-.3210

ARC11-716 IA14 OL+T12+S12N25 RIGHT VERTICAL (R61R51)

ALPHAO(1) = -7.970 BETAO (3) = .020

SECTION (1)RIGHT VERTICAL DEPENDENT VARIABLE CP

Z/BV	.1580	.3160	.6000	.8400	.9250
X/CV					
.775	-.3146	-.3733	-.3339	-.3192	-.3323
.900		-.3994	-.3002	-.3362	-.3377

ALPHAO(1) = -7.970 BETAO (4) = 4.110

SECTION (1)RIGHT VERTICAL DEPENDENT VARIABLE CP

Z/BV	.1580	.3160	.6000	.8400	.9250
X/CV					
.000	.7272	.6655	.6961	.6355	.6801
.050	.5918	.4993	.4858	.5084	.5071
.150	.4677	.4067	.3970	.4490	.4232
.300	.3219	.3349	.3579	.3738	.3248
.520	.2485	.2419	.2093	.2133	.1530
.685	-.2835	-.2892	-.2915	-.2931	-.3043
.775	-.3524	-.3100	-.2739	-.2865	-.3200
.900		-.2869	-.2397	-.2872	-.3374

ALPHAO(1) = -7.980 BETAO (5) = 8.180

SECTION (1)RIGHT VERTICAL DEPENDENT VARIABLE CP

Z/BV	.1580	.3160	.6000	.8400	.9250
X/CV					
.000	.5854	.4971	.5157	.4526	.5195
.050	.7475	.6918	.6797	.6771	.6559
.150	.5946	.5782	.5523	.5916	.5394
.300	.4608	.4915	.4762	.4861	.4180
.520	.3767	.3298	.3190	.2937	.1746
.685	-.1958	-.2485	-.2496	-.2748	-.2930
.775	-.3152	-.2480	-.2224	-.2397	-.2831
.900		-.1966	-.1599	-.2176	-.2884

ARC11-716 IA14 C8+T12+S12N25 RIGHT VERTICAL (RB1R51)

ALPHA(2) = -3.980 BETA(1) = -8.060

SECTION 1:RIGHT VERTICAL DEPENDENT VARIABLE CP

Z/BV	.1580	.3160	.6000	.8400	.9250
X/CV					
.000	.5507	.4014	.4458	.4658	.4061
.050	-.2442	-.2752	-.3942	-.4878	-.5652
.150	-.3467	-.2985	-.4059	-.4572	-.5437
.300	.0426	-.3084	-.3683	-.3849	-.4193
.520	-.0998	-.2816	-.3690	-.3708	-.2931
.685	-.4546	-.4379	-.5311	.4328	-.5184
.775	-.5311	-.4847	-.5167	-.5253	-.5323
.900		-.4277	-.4172	-.3913	-.5117

ALPHA(2) = -3.990 BETA(2) = -4.030

SECTION (1)RIGHT VERTICAL DEPENDENT VARIABLE CP

Z/BV	.1580	.3160	.6000	.8400	.9250
X/CV					
.000	.7702	.5725	.6156	.6193	.5997
.050	-.0586	-.1808	-.4007	-.4208	-.4560
.150	.0701	-.0974	-.2802	-.3408	-.3435
.300	.0726	-.0190	-.0562	-.2386	-.2313
.520	-.0379	-.0552	-.0963	-.0717	-.0761
.685	-.4331	-.4166	-.4221	-.3618	-.3745
.775	-.3259	-.4361	-.4237	-.3817	-.3747
.900		-.3914	-.3523	-.3927	-.3849

ALPHA(2) = -3.850 BETA(3) = .040

SECTION (1)RIGHT VERTICAL DEPENDENT VARIABLE CP

Z/BV	.1580	.3160	.6000	.8400	.9250
X/CV					
.000	.7085	.6537	.6586	.6288	.6176
.050	.2409	.0794	-.0156	-.0327	-.0243
.150	.2910	.1895	.0895	.1907	.1938
.300	.1562	.1142	.1372	.1594	.1527
.520	.0552	.0579	.0483	.0650	.0612
.685	-.3716	-.3716	-.3582	-.3146	-.3598
.775	-.2884	-.3922	-.3547	-.3335	-.3555
.900		-.3642	-.3069	-.3450	-.3641

ARC11-716 IA14 OL+T12+512N25 RIGHT VERTICAL (RB1R51)

ALPHAO(2) = -3.970 BETAO (4) = 4.090

SECTION (1)RIGHT VERTICAL DEPENDENT VARIABLE CP

Z/BV	.1580	.3160	.6000	.8400	.9250
X/CV					
.000	.6624	.5954	.6025	.5491	.5948
.050	.5168	.4237	.4091	.4362	.4431
.150	.3958	.3218	.3239	.3801	.3608
.300	.2537	.2597	.2961	.3137	.2709
.520	.1817	.1848	.1583	.1666	.1089
.685	-.3368	-.3156	-.3088	-.3081	-.3270
.775	-.3607	-.3372	-.3042	-.3115	-.3467
.900		-.3223	-.2636	-.3067	-.3622

ALPHAO(2) = -4.000 BETAO (5) = 8.150

SECTION (1)RIGHT VERTICAL DEPENDENT VARIABLE CP

Z/BV	.1580	.3160	.6000	.8400	.9250
X/CV					
.000	.5280	.4200	.4300	.3495	.4183
.050	.6926	.6153	.6143	.6081	.5991
.150	.5280	.5048	.4865	.5293	.4885
.300	.4028	.4401	.4246	.4381	.3709
.520	.3351	.2941	.2640	.2539	.1365
.685	-.2276	-.2621	-.2682	-.2837	-.3041
.775	-.3274	-.2688	-.2488	-.2651	-.3041
.900		-.2262	-.1903	-.2345	-.3037

ALPHAO(3) = -.370 BETAO (1) = -8.100

SECTION (1)RIGHT VERTICAL DEPENDENT VARIABLE CP

Z/BV	.1580	.3160	.6000	.8400	.9250
X/CV					
.000	.4973	.3556	.3720	.3745	.3162
.050	-.3037	-.3175	-.4206	-.4874	-.5575
.150	-.3788	-.3361	-.4247	-.4768	-.5734
.300	.0219	-.3428	-.3842	-.4190	-.4135
.520	-.1427	-.3066	-.3879	-.4019	-.3082
.685	-.4139	-.4528	-.5372	-.5020	-.5403
.775	-.3092	-.4853	-.5313	-.4970	-.5417
.900		-.4042	-.4110	-.3985	-.4403

ARC11-716 1A14 01+T12+S12N25 RIGHT VERTICAL RB1R51)

ALPHAO(3) = -.390 BETAO (2) = -4.010

SECTION (1)RIGHT VERTICAL DEPENDENT VARIABLE CP

Z/BV	.1580	.3160	.6000	.8400	.9250
X/CV					
.000	.5980	.5076	.5452	.5267	.5062
.050	-.0804	-.2162	-.4215	-.4437	-.4807
.150	.0037	-.1302	-.2970	-.3711	-.3799
.300	.0336	-.0589	-.0911	-.2670	-.2669
.520	-.0676	-.0931	-.1306	-.1049	-.0690
.685	-.4370	-.4399	-.4401	-.3763	-.3900
.775	-.3161	-.4553	-.4341	-.4026	-.3941
.900		-.3761	-.3711	-.4124	-.4174

ALPHAO(3) = -.390 BETAO (3) = .030

SECTION (1)RIGHT VERTICAL DEPENDENT VARIABLE CP

Z/BV	.1580	.3160	.6000	.8400	.9250
X/CV					
.000	.6258	.5960	.5911	.5496	.5746
.050	.1803	.0549	-.0394	-.0557	-.0593
.150	.2471	.1499	.0478	.1413	.1438
.300	.1190	.0757	.0937	.1167	.1106
.520	.0231	.0276	.0131	.0280	.0263
.685	-.4008	-.3832	-.3730	-.3322	-.3549
.775	-.28[illegible]	-.4050	-.3719	-.3560	-.3751
.900		-.3638	-.3238	-.3626	-.3862

ALPHAO(3) = -.400 BETAO (4) = 4.090

SECTION (1)RIGHT VERTICAL DEPENDENT VARIABLE CP

Z/BV	.1580	.3160	.6000	.8400	.9250
X/CV					
.000	.6192	.5399	.5354	.4737	.5203
.050	.4745	.3801	.3558	.3839	.3980
.150	.3494	.2774	.2792	.3358	.3207
.300	.2081	.2134	.2690	.2740	.2326
.520	.1485	.1481	.1293	.1415	.0800
.685	-.3475	-.3241	-.3197	-.3037	-.3336
.775	-.3370	-.3485	-.3169	-.3160	-.3566
.900		-.3331	-.2678	-.3042	-.3714

ARC11-716 IA14 O1+T12+S12N25 RIGHT VERTICAL (RB1R51)

ALPHAO(3) = -.400 BETAO (3) = 8.140

SECTION (1)RIGHT VERTICAL DEPENDENT VARIABLE CP

Z/BV	.1580	.3160	.6000	.8400	.9250
X/CV					
.000	.4886	.3768	.3704	.2794	.3468
.050	.6270	.5494	.5581	.5435	.5453
.150	.4646	.4419	.4358	.4675	.4390
.300	.3411	.3821	.3789	.3933	.3276
.520	.2958	.2634	.2243	.2202	.1042
.685	-.2618	-.2721	-.2776	-.2698	-.3166
.775	-.3402	-.2776	-.2647	-.2644	-.3177
.900		-.2453	-.1950	-.2338	-.3164

ALPHAO(4) = 4.110 BETAO (1) = -8.070

SECTION (1)RIGHT VERTICAL DEPENDENT VARIABLE CP

Z/BV	.1580	.3160	.6000	8400	.9250
X/CV					
.000	.4489	.2997	.3222	.2909	.2414
.050	-.3367	-.3490	-.4298	-.4896	-.5514
.150	-.4193	-.3632	-.4353	-.5049	-.5422
.300	-.0405	-.3712	-.3950	-.4340	-.4218
.520	-.1885	-.3143	-.3968	-.4190	-.3335
.685	-.3298	-.4574	-.5585	-.5019	-.5372
.775	-.2857	-.4348	-.5346	-.5046	-.5379
.900		-.3987	-.3966	-.4084	-.4167

ALPHAO(4) = 4.100 BETAO (2) = -3.980

SECTION (1)RIGHT VERTICAL DEPENDENT VARIABLE CP

Z/BV	.1580	.3160	.6000	.8400	.9250
X/CV					
.000	.5553	.4262	.4637	.4289	.4117
.050	-.1223	-.2228	-.4234	-.4550	-.4916
.150	-.1012	-.1477	-.2878	-.3821	-.3985
.300	.0235	-.0942	-.1331	-.2690	-.2849
.520	-.1097	-.1264	-.1617	-.1383	-.0818
.685	-.3743	-.4460	-.4575	-.3907	-.4001
.775	-.2907	-.4347	-.4450	-.4225	-.4102
.900		-.3484	-.3801	-.4271	-.4307

ARC11-716 TA14 C1+T12+S12N25 RIGHT VERTICAL (RB1R51)

ALPHAO(4) = 4.100 BETAO (3) = .060

SECTION (1)RIGHT VERTICAL DEPENDENT VARIABLE CP

X/CV \ Z/BV	.1580	.3160	.6000	.8400	.9250
.000	.5659	.5097	.4951	.4499	.4640
.050	.1603	.0126	-.0776	-.0887	-.0948
.150	.1877	.0929	-.0057	.0854	.0901
.300	.0629	.0218	.0410	.0614	.0621
.520	-.0220	-.0160	-.0332	-.0145	-.0182
.685	-.3963	-.3987	-.3947	-.3503	-.3771
.775	-.2669	-.4190	-.3942	-.3798	-.4027
.900		-.3349	-.3405	.3914	-.4135

ALPHAO(4) = 4.100 BETAO (4) = 4.130

SECTION (1)RIGHT VERTICAL DEPENDENT VARIABLE CP

X/CV \ Z/BV	.1580	.3160	.6000	.8400	.9250
.000	.5508	.4470	.4376	.3787	.4200
.050	.4264	.3181	.2806	.3052	.3196
.150	.2988	.2173	.2109	.2627	.2533
.300	.1519	.1529	.1926	.2092	.1752
.520	.0970	.1017	.0778	.0894	.0299
.685	-.3933	-.3791	-.3530	-.3299	-.3585
.775	-.3367	-.3658	-.3470	-.3506	-.3831
.900		-.3602	-.2929	-.3349	-.3937

ALPHAO(4) = 4.090 BETAO (5) = 8.180

SECTION (1)RIGHT VERTICAL DEPENDENT VARIABLE CP

X/CV \ Z/BV	.1580	.3160	.6000	.8400	.9250
.000	.4157	.3236	.3146	.2066	.2555
.050	.5163	.4603	.4738	.4770	.4737
.150	.3397	.3406	.3615	.4017	.3761
.300	.2197	.2867	.3205	.3293	.2717
.520	.2197	.2153	.1746	.1792	.0620
.685	-.3183	-.3042	-.3049	-.2984	-.3376
.775	-.3472	-.3175	-.2940	-.3052	-.3366
.900		-.3000	-.2352	-.2707	-.3362

ARC11-716 IA14 01+T12+S12N25 RIGHT VERTICAL (RB1R51)

ALPHAO(5) = 8.010 BETAO (1) = -8.050

SECTION (1)RIGHT VERTICAL DEPENDENT VARIABLE CP

Z/BV	.1580	.3160	.6000	.8400	.9250
X/CV					
.000	.4028	.2686	.2820	.2299	.1822
.050	-.2419	-.3167	-.4384	-.4920	-.5468
.150	-.1443	-.3268	-.4426	-.5197	-.5240
.300	-.1635	-.3338	-.4057	-.4559	-.4519
.520	-.2758	-.2926	-.4041	-.4412	-.3786
.685	-.3789	-.3921	-.5225	-.4934	-.5111
.775	-.3151	-.3555	-.4923	-.4430	-.4300
.900		-.3048	-.3728	-.4060	-.3835

ALPHAO(5) = 8.010 BETAO (2) = -4.010

SECTION (1)RIGHT VERTICAL DEPENDENT VARIABLE CP

Z/BV	.1580	.3160	.6000	.8400	.9250
X/CV					
.000	.5735	.4052	.3728	.3412	.3166
.050	-.1129	-.2456	-.4176	-.4795	-.5144
.150	.1326	-.1399	-.2974	-.4193	-.4333
.300	-.0438	-.1230	-.1585	-.2046	-.3136
.520	-.1639	-.1664	-.1862	-.1689	-.1083
.685	-.3499	-.4774	-.4709	-.4104	-.4178
.775	-.3199	-.4236	-.4601	-.4457	-.4333
.900		-.3466	-.3943	-.4507	-.4517

ALPHAO(5) = 8.020 BETAO (3) = .050

SECTION (1)RIGHT VERTICAL DEPENDENT VARIABLE CP

Z/BV	.1580	.3160	.6000	.8400	.9250
X/CV					
.000	.5464	.4583	.4067	.3628	.3761
.050	.0255	-.0071	-.0942	-.1136	-.1261
.150	.1684	.0613	-.0497	.0403	.0446
.300	.0276	-.0196	-.0005	.0222	.0218
.520	-.0590	-.0521	-.0690	-.0513	-.0556
.685	-.4053	-.4100	-.4117	-.3647	-.3941
.775	-.2618	-.4280	-.4082	-.3969	-.4213
.900		-.3311	-.3387	-.3953	-.4310

ARC11-7:6 TA14 (1+T12+S12)R5 RIGHT VERTICAL (RB1R51)

ALPHAC(5) = 8.010 BETAC (4) = 4.150

SECTION (1)RIGHT VERTICAL DEPENDENT VARIABLE CP

Z/BV	.1580	.3160	.6000	.8400	.9250
X/CV					
.000	.5255	.4313	.3713	.2894	.3264
.050	.5461	.2616	.2178	.2425	.2615
.150	.2203	.1665	.1470	.2064	.2009
.300	.0850	.1010	.1354	.1622	.1294
.520	.0427	.0547	.0392	.0507	-.0078
.685	-.4196	-.3860	-.3614	-.3374	-.3729
.775	-.3694	-.3768	-.3526	-.3613	-.3975
.900		-.3867	-.3028	-.3422	-.4009

ALPHAC(5) = 7.990 BETAC (5) = 8.280

SECTION (1)RIGHT VERTICAL DEPENDENT VARIABLE CP

Z/BV	.1580	.3160	.6000	.8400	.9250
X/CV					
.000	.3743	.2821	.2529	.1330	.1819
.050	.4329	.4067	.4124	.4182	.4178
.150	.2732	.2748	.3004	.3453	.3257
.300	.0920	.2113	.2689	.2804	.2339
.520	.1220	.1653	.1437	.1451	.0266
.685	-.3927	-.3159	-.3147	-.3061	-.3499
.775	-.3641	-.3373	-.3018	-.3136	-.3457
.900		-.3419	-.2435	-.2854	-.3459